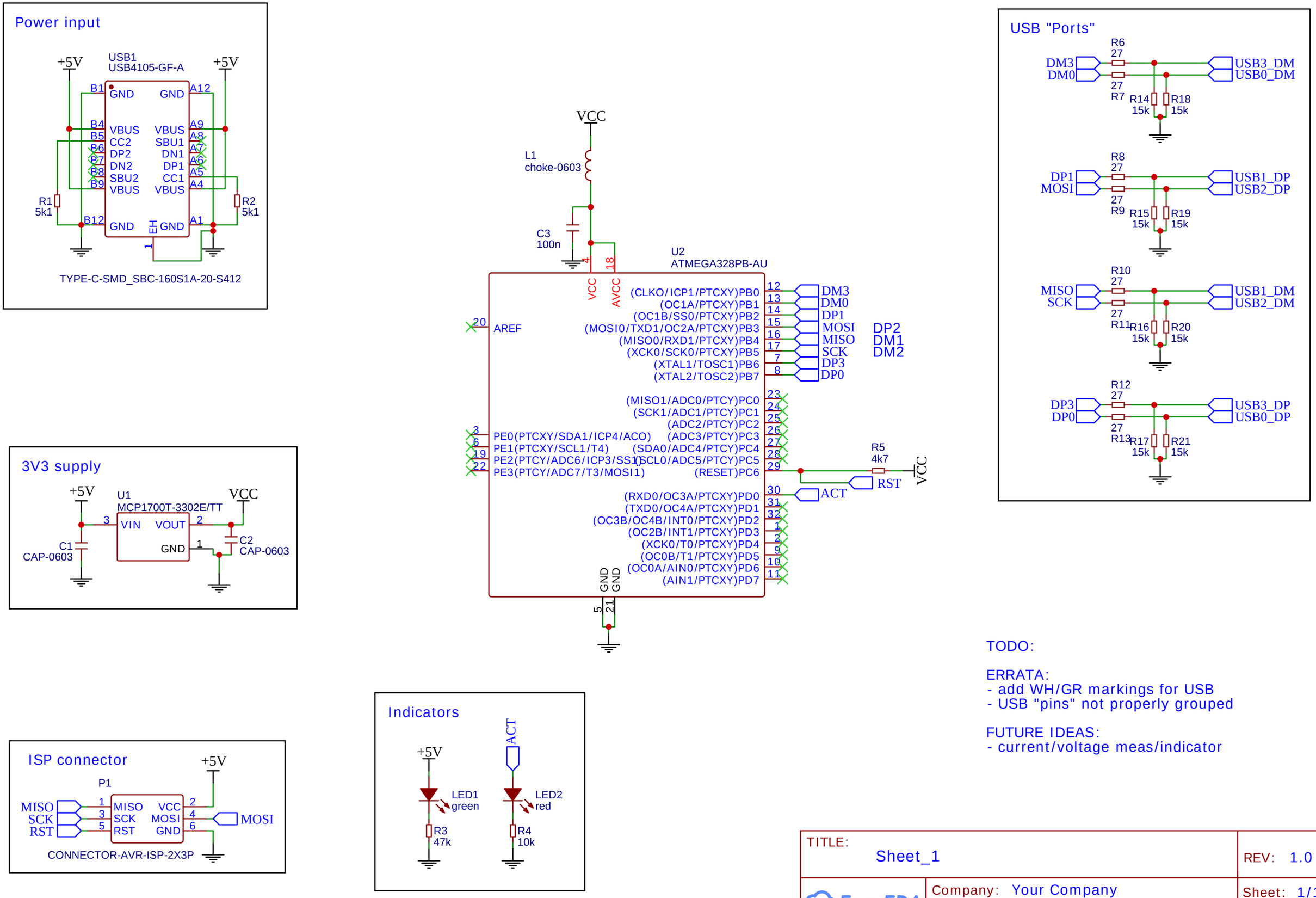

TODO:

ERRATA:
- add WH/GR markings for USB
- USB "pins" not properly grouped

FUTURE IDEAS:
- current/voltage meas/indicator

TITLE: Sheet_1		REV: 1.0
EasyEDA	Company: Your Company	Sheet: 1/1
	Date: 2023-10-21 Drawn By: bramfeld	