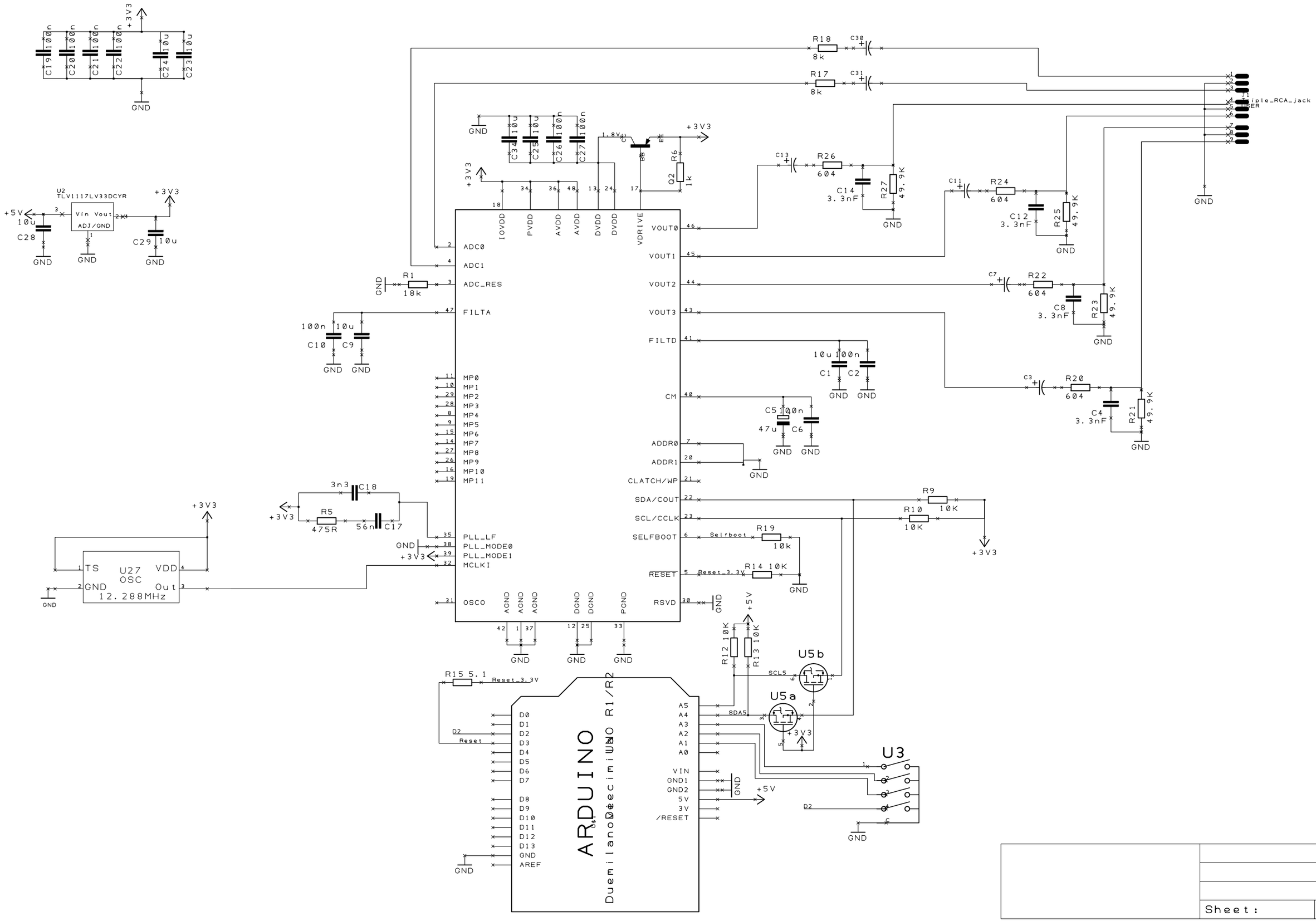
C19 100n
C20 100n
C21 100n
C22 100n
C24 10u
C23 10u
+3V3
GND
U2
TLV1117LV33DCYR
Vin Vout
ADJ/GND
+5V
C28 10u
C29 10u
R18 8k
C30
R17 8k
C31
Triple_RCA_jack
C34 10u
C25 10u
C26 100n
C27 100n
1.8V
R6 1k
Q2
C13
R26 604
C14 3.3nF
R27 49.9K
C11
R24 604
C12 3.3nF
R25 49.9K
IOVDD
PVDD
AVDD
AVDD
DVDD
DVDD
VDRIVE
ADC0
ADC1
ADC_RES
FILTA
R1 18k
100n 10u
C10 C9
VOUT0
VOUT1
VOUT2
VOUT3
FILTD
C7
R22 604
C8 3.3nF
R23 49.9K
10u 100n
C1 C2
C3
R20 604
C4 3.3nF
R21 49.9K
CM
C5 100n
47u C6
ADDR0
ADDR1
CLATCH/WP
SDA/COUT
SCL/CCLK
SELFBOOT
RESET
RSVD
R9 10K
R10 10K
R19 10k
Selfboot
R14 10K
Reset_3.3V
MP0
MP1
MP2
MP3
MP4
MP5
MP6
MP7
MP8
MP9
MP10
MP11
3n3 C18
R5 475R
56n C17
PLL_LF
PLL_MODE0
PLL_MODE1
MCLKI
OSCO
AGND
DGND
PGND
U27
OSC
12.288MHz
TS
VDD
Out
R12 10K
R13 10K
U5b
U5a
SCL5
SDA5
R15 5.1
D0
D1
D2
D3
D4
D5
D6
D7
D8
D9
D10
D11
D12
D13
AREF
A5
A4
A3
A2
A1
A0
VIN
GND1
GND2
5V
3V
/RESET
ARDUINO
Duemilanove
Decimilia
UNO R1/R2
U3
Sheet: