ALKB602 Portable Air Pressure Pump

Technical White Paper

1. Product Overview and Technical Background

The ALKB602 Portable Air Pressure Pump is a high-precision auxiliary device specifically designed for pressure testing. It is primarily used in conjunction with pressure standards to calibrate and test various types of pressure instruments. As a key piece of equipment in the field of pressure calibration, Thanks to its precise pressure control capabilities and portability, the ALKB602 Portable Air Pressure Pump has become the ideal choice for industries such as metrology, scientific research, industrial and mining enterprises, and instrument manufacturing.

2. Technical Specifications and Performance Metrics

2.1 Basic Technical Specifications

Parameter Category	Technical Specifications	Notes
Operating Environment	Laboratory or Field Use	Suitable for various working environments
Ambient Temperature	-10 to 60°C	Wide operating temperature range
Relative Humidity	<80%	Moisture-resistant design
Pressure Range	-0.095 to 6 MPa	Supports both positive and negative pressure requirements
Measured Medium	Clean air	Excellent compatibility with various media
Pressure Output	2	Can connect both standard meters and test meters simultaneously
Threaded Connection	M20×1.5 or as specified by the user	Flexible interface configuration
Adjustment Precision	min 10 Pa	High-precision pressure regulation
Dimensions	310×250×180 mm	Compact design
Weight	4.2 kg	Easy to carry

2.2 Key Performance Features

Easy to Operate: The product is designed according to ergonomic principles, with simple and intuitive operating procedures that allow even non-professionals to get started quickly.

Wide Pressure Range: With a pressure output range of -0.095 to 6 MPa, it covers a wide measurement range from vacuum to high pressure, making it suitable for a variety of applications.

High Portability: Weighing approximately 4.2 kg with moderate overall dimensions, the device is easy to carry and operate on-site, significantly improving work efficiency.

Quick-Connect Design: Equipped with two standard M20×1.5 pressure quick-connect ports,

facilitating rapid connection to standard gauges and test instruments to enhance work efficiency.

Exhaust Valve Design: Features a dedicated exhaust valve for rapid pressure relief after measurement, enhancing operational safety.

Positive/Negative Pressure Switching Technology: A unique positive/negative pressure switching valve design allows for easy switching between positive and negative pressure modes, expanding the device's application range.

3. Main Application Areas

The ALKB602 portable air pressure pump, with its wide pressure range and high-precision adjustment capabilities, is widely applicable across multiple industries and fields.

3.1 Measurement and Calibration:

Serves as auxiliary equipment for pressure standards, used for the calibration and testing of various pressure instruments.

3.2 Scientific Research and Experimentation:

Provides a stable pressure source for various pressure-related experiments in laboratory settings.

3.3 Industrial and Mining Enterprises:

Used for pressure detection, equipment maintenance, and quality control in industrial settings.

3.4 Instrument Manufacturing:

Used for product calibration and quality inspection during the production of pressure instruments.

3.5 Research and Education:

Used in laboratories at universities and research institutes for pressure measurement-related research and teaching experiments.

4. Operation and Maintenance Guide

Operating Procedure

Positive Pressure Testing

Unscrew the plugs on outputs 1 and 2, set the fine adjustment to the appropriate position (middle position), press the switch valve in, connect the standard gauge and the gauge under test, and tighten the connections. Close the relief valve. When the pressure reaches approximately 3 MPa by operating the lever, use the fine-tuning knob to adjust the pressure to approximately 6.5 MPa. Allow the pressure to stabilize for 1–2 minutes, then use the fine-tuning knob to set it to the calibration point of 6 MPa. After the measurement is complete, open the relief valve. Only after the pressure has been fully released may the test gauge and standard gauge be disconnected.

Vacuum Testing

Unscrew the plug from the outlet connector, set the fine-tuning knob to the appropriate position (middle position), pull out the selector switch, connect the standard gauge and the test gauge and tighten them, then close the vent valve. Operate the lever to create a vacuum; when the pressure reaches approximately -0.095 MPa, allow it to stabilize for 1–2 minutes. Use the fine-tuning knob to adjust to the calibration point, then test point by point down to zero.

Maintenance Guide

Place the air pump on a flat, easily accessible work surface and avoid using it in environments containing highly corrosive gases or dust particles. The instrument under test should be properly cleaned to prevent contaminants from entering the test circuit.

The outlet connector is a dedicated quick-connect fitting with a face seal. When installing the instrument, no tools are required; simply tighten it evenly by hand. Once the sealing surfaces are in contact, tighten it an additional 1–2 turns.

The outlet connector consists of two parts (upper and lower). During use, frequently check whether the lower locking screw is securely fastened. If the connection is unreliable, it may come loose under high pressure.

When the lever feels heavy to operate, use the fine-tuning pressure adjustment function for easier operation.

5. Structure and Function

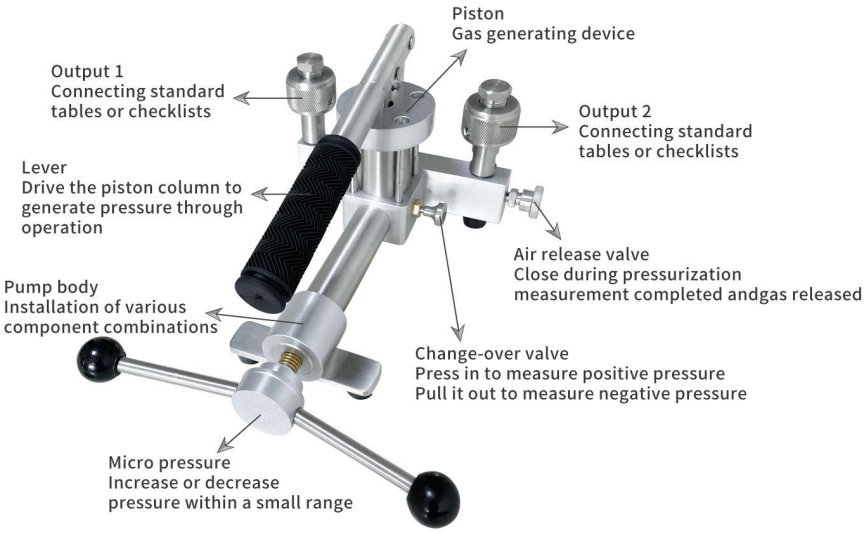

6. Conclusion

The AILEIKE ALKB602 portable pneumatic pump is designed to provide stable and precise pressure output, ensuring the accuracy and reliability of pressure measurement equipment. By generating pressure or vacuum through manual operation, it can be used in conjunction with standard pressure measurement equipment to calibrate various types of pressure gauges, pressure transmitters, and other devices, thereby providing essential support for industrial production and scientific research.