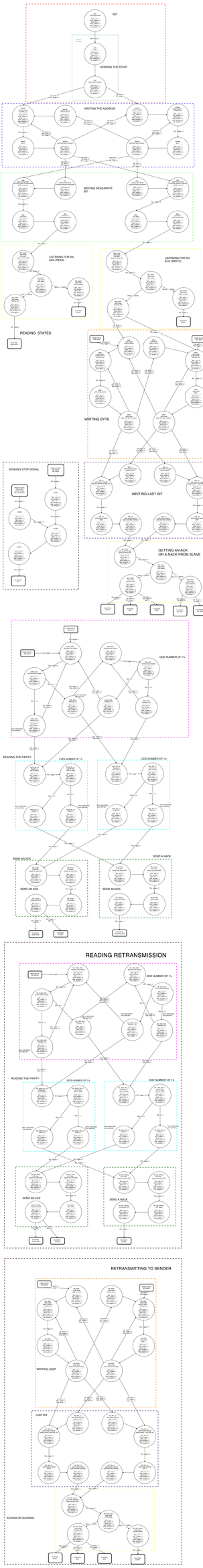

READING RETRANSMISSION

RETRANSMITTING TO SENDER