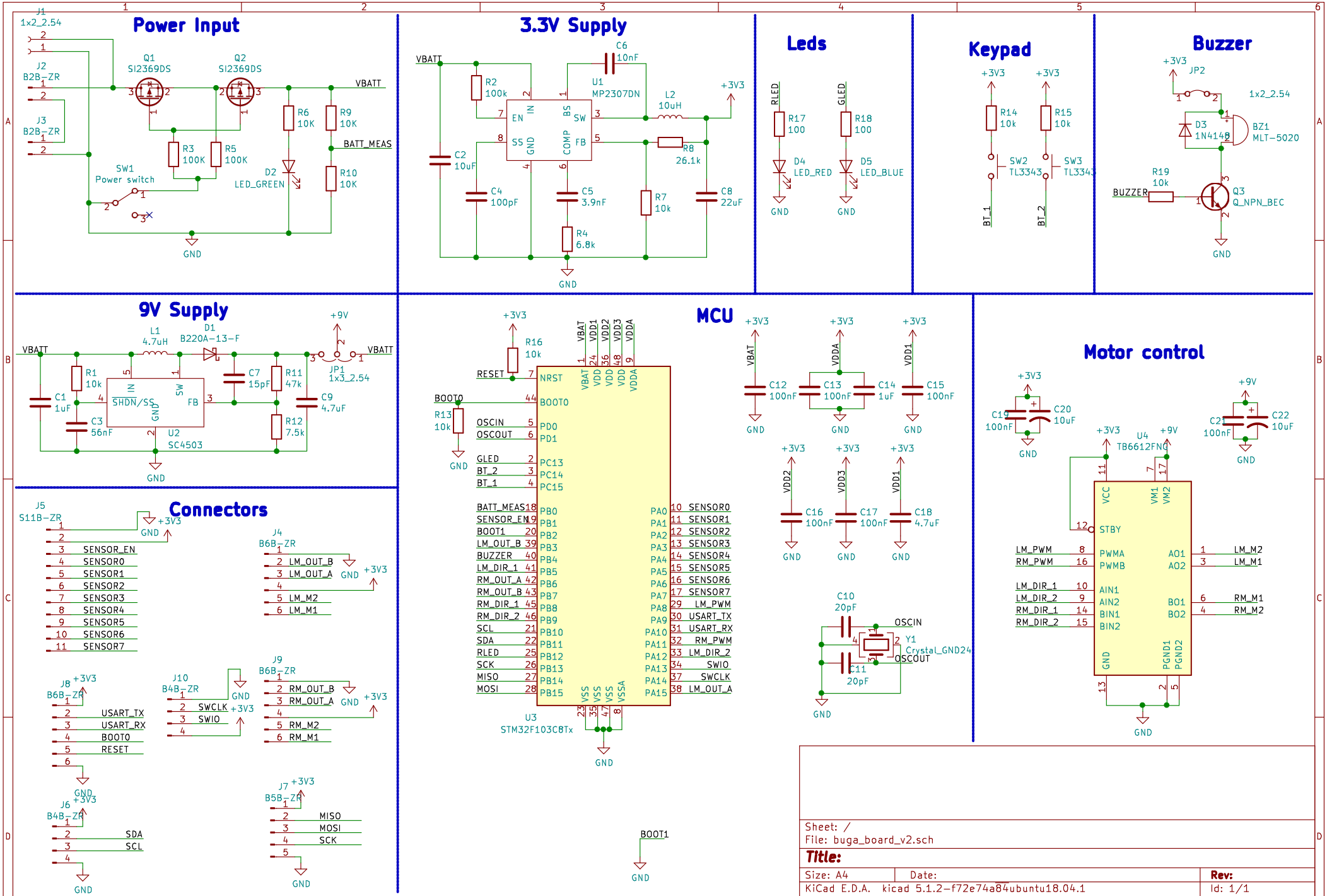
Power Input
J1
1x2_2.54
J2
B2B-ZR
J3
B2B-ZR
Q1
SI2369DS
Q2
SI2369DS
VBATT
R6
10K
R9
10K
BATT_MEAS
R3
100K
R5
100K
D2
LED_GREEN
R10
10K
SW1
Power switch
GND
3.3V Supply
VBATT
R2
100k
C6
10nF
U1
MP2307DN
EN
IN
BS
SW
SS
GND
COMP
FB
L2
10uH
+3V3
R8
26.1k
C2
10uF
C4
100pF
C5
3.9nF
R7
10k
C8
22uF
R4
6.8k
GND
Leds
RLED
R17
100
D4
LED_RED
GLED
R18
100
D5
LED_BLUE
GND
Keypad
+3V3
R14
10k
R15
10k
SW2
TL3343
SW3
TL3343
BT_1
BT_2
Buzzer
+3V3
JP2
1x2_2.54
D3
1N4148
BZ1
MLT-5020
R19
10k
BUZZER
Q3
Q_NPN_BEC
GND
9V Supply
VBATT
L1
4.7uH
D1
B220A-13-F
+9V
JP1
1x3_2.54
R1
10k
C1
1uF
C3
56nF
IN
SW
SHDN/SS
GND
FB
U2
SC4503
C7
15pF
R11
47k
C9
4.7uF
R12
7.5k
GND
MCU
+3V3
R16
10k
RESET
BOOT0
R13
10k
OSCIN
OSCOUT
GLED
BT_2
BT_1
BATT_MEAS
SENSOR_EN
BOOT1
LM_OUT_B
BUZZER
LM_DIR_1
RM_OUT_A
RM_OUT_B
RM_DIR_1
RM_DIR_2
SCL
SDA
RLED
SCK
MISO
MOSI
VBAT
VDD1
VDD2
VDD3
VDDA
NRST
PD0
PD1
PC13
PC14
PC15
PB0
PB1
PB2
PB3
PB4
PB5
PB6
PB7
PB8
PB9
PB10
PB11
PB12
PB13
PB14
PB15
PA0
PA1
PA2
PA3
PA4
PA5
PA6
PA7
PA8
PA9
PA10
PA11
PA12
PA13
PA14
PA15
SENSOR0
SENSOR1
SENSOR2
SENSOR3
SENSOR4
SENSOR5
SENSOR6
SENSOR7
LM_PWM
USART_TX
USART_RX
RM_PWM
LM_DIR_2
SWIO
SWCLK
LM_OUT_A
VSS
VSSA
U3
STM32F103C8Tx
C12
100nF
C13
100nF
C14
1uF
C15
100nF
C16
100nF
C17
100nF
C18
4.7uF
C10
20pF
C11
20pF
Y1
Crystal_GND24
Motor control
C19
100nF
C20
10uF
C21
100nF
C22
10uF
U4
TB6612FNG
VCC
VM1
VM2
STBY
PWMA
PWMB
AIN1
AIN2
BIN1
BIN2
AO1
AO2
BO1
BO2
GND
PGND1
PGND2
LM_M2
LM_M1
RM_M1
RM_M2
Connectors
J5
S11B-ZR
SENSOR_EN
SENSOR0
SENSOR1
SENSOR2
SENSOR3
SENSOR4
SENSOR5
SENSOR6
SENSOR7
J4
B6B-ZR
LM_OUT_B
LM_OUT_A
LM_M2
LM_M1
J8
B6B-ZR
USART_TX
USART_RX
BOOT0
RESET
J10
B4B-ZR
SWCLK
SWIO
J9
B6B-ZR
RM_OUT_B
RM_OUT_A
RM_M2
RM_M1
J6
B4B-ZR
SDA
SCL
J7
B5B-ZR
MISO
MOSI
SCK
Sheet: /
File: buga_board_v2.sch
Title:
Size: A4
Date:
Rev:
KiCad E.D.A. kicad 5.1.2-f72e74a84ubuntu18.04.1
Id: 1/1