Study of the Influence of Stage Timing Synchronization on the Efficiency of a Four-Stage Electromagnetic Mass Accelerator

Completed by:

Roman Vyacheslavovich Chuprasov

Student of Class 10A

Volgograd

2026

Introduction 2

Chapter 1. Literature Review 4

1.1. Electromagnetic Mass Accelerators and Their Operating Principle 4

1.2. Features of Multistage Coil Accelerators 5

1.3. Numerical Modeling and Experimental Methods for Studying Coilgun Systems 6

Chapter 2. Research Materials and Methods 8

2.1. Design of the Experimental Setup 8

2.2. Operating Principle and Control System 10

2.3. Method for Measuring Velocity and Calculating Efficiency 11

2.4. Numerical Modeling Method 12

2.5. Limitations of the Experimental Methodology 13

Chapter 3. Research Results and Discussion 14

3.1. Development and Implementation of the Experimental Setup 14

3.2. Results of Numerical Modeling and Determination of Stage Synchronization Parameters 15

3.3. Implementation of the Control System and Experimental Measurement of Projectile Velocity 16

3.4. Calculation of the Efficiency of the Setup 17

3.5. Influence of the Synchronization Parameter L on Accelerator Efficiency 18

3.6. Analysis of the Causes of Discrepancies Between the Model and the Experiment 21

References 23

Introduction

Electromagnetic mass accelerators are devices in which a ferromagnetic body is accelerated by the action of an electromagnetic field. One of the most common types of such devices is the coil-type electromagnetic accelerator, known as a **coilgun**. In such systems, the projectile is accelerated while passing through sequentially arranged inductor coils, in which a powerful pulsed magnetic field is generated during capacitor discharge.

One of the key problems in the development of multistage coil accelerators is the synchronization of all stages. The efficiency of energy transfer to the projectile fully depends on the moment each coil is activated relative to the projectile's position in the barrel. If a coil is activated too early or too late, the magnetic field will either exert a braking effect on the projectile or be used inefficiently, which will lead to a decrease in velocity and a reduction in the efficiency of the setup.

Interest in electromagnetic accelerators is due to the possibility of converting electrical energy directly into the kinetic energy of a moving body without the use of mechanical action. Such devices are considered as systems for scientific experiments, engineering developments, and in some cases for specialized technical applications. Theoretically, Gauss guns may be used for launching light satellites into orbit, since in stationary use it is possible to have a large energy source. [2]

Therefore, the study of optimal stage timing synchronization is an important task in the development of electromagnetic accelerators. Numerical simulation methods of magnetic fields are widely used to analyze such processes, making it possible to estimate the magnetic field distribution under different system parameters. However, simulation results require experimental verification, since the real operating conditions of the setup may differ from idealized models. [1]

This paper considers a four-stage electromagnetic mass accelerator designed and manufactured by the author. The setup is a compact experimental system in which a ferromagnetic projectile is accelerated by sequential activation of four coils powered by high-voltage capacitors. The stages are controlled by an **ESP32** microcontroller receiving information about the projectile position from infrared sensors.

The paper investigates the influence of the stage activation delay, determined by the distance between the IR projectile position sensor and the coil, on the efficiency of the accelerator. The optimal synchronization parameters were preliminarily determined using magnetic field simulations in the FEMM program, after which experimental verification of the obtained data was carried out. [1; 5]

Purpose of the study:

To experimentally determine the dependence of the efficiency of a four-stage electromagnetic mass accelerator on the stage activation delay and to compare the obtained results with numerical simulation data.

Research objectives:

1. To design and manufacture an experimental setup of a four-stage electromagnetic mass accelerator.
2. To carry out numerical modeling of the accelerator operation and determine the optimal stage synchronization parameters.
3. To implement a stage control system using IR projectile position sensors and a microcontroller.
4. To conduct experimental measurements of projectile velocity at different stages of acceleration.
5. To investigate the influence of the distance **L** from the infrared sensor to the beginning of the coil, which determines the stage activation timing, on the efficiency of individual stages and of the entire setup as a whole.

6. To compare the experimental results with the numerical simulation results and analyze the causes of discrepancies.

The following research methods were used in the work:

- numerical simulation of the magnetic field and interaction forces in the FEMM program;
- experimental measurement of projectile velocity using infrared position sensors;
- calculation of the projectile kinetic energy and the efficiency of the setup;
- comparative analysis of simulation and experimental results.

Chapter 1. Literature Review

1.1. Electromagnetic Mass Accelerators and Their Operating Principle

Electromagnetic mass accelerators represent a class of devices in which the acceleration of a body is achieved by converting electrical energy into kinetic energy without the use of mechanical action. Depending on the operating principle, such devices are divided into railguns, induction accelerators, and coil-type mass accelerators. In the present work, a coil-type electromagnetic accelerator, known as a **coilgun**, is considered.

The operating principle of a coil accelerator consists in creating a pulsed magnetic field by a solenoid through which a ferromagnetic projectile passes [4]. When current flows through the coil, a strong magnetic field arises, pulling the projectile toward the center of the solenoid. If the capacitor discharges before the projectile passes the center of the coil, the magnetic field imparts positive acceleration to it. If the field remains for too long, a braking effect occurs, which reduces the velocity and lowers the efficiency of the setup. [2]

For multistage accelerators, the task becomes more complicated because it is necessary to coordinate the operation of all stages with each other. In this case, the projectile's output velocity is the cumulative contribution of each stage, while synchronization errors may accumulate and lead to a strong discrepancy between calculated and experimental data.

1.2. Features of Multistage Coil Accelerators

Unlike a single-stage coil accelerator, a multistage system makes it possible to increase the projectile velocity more efficiently through several electromagnetic pulses.

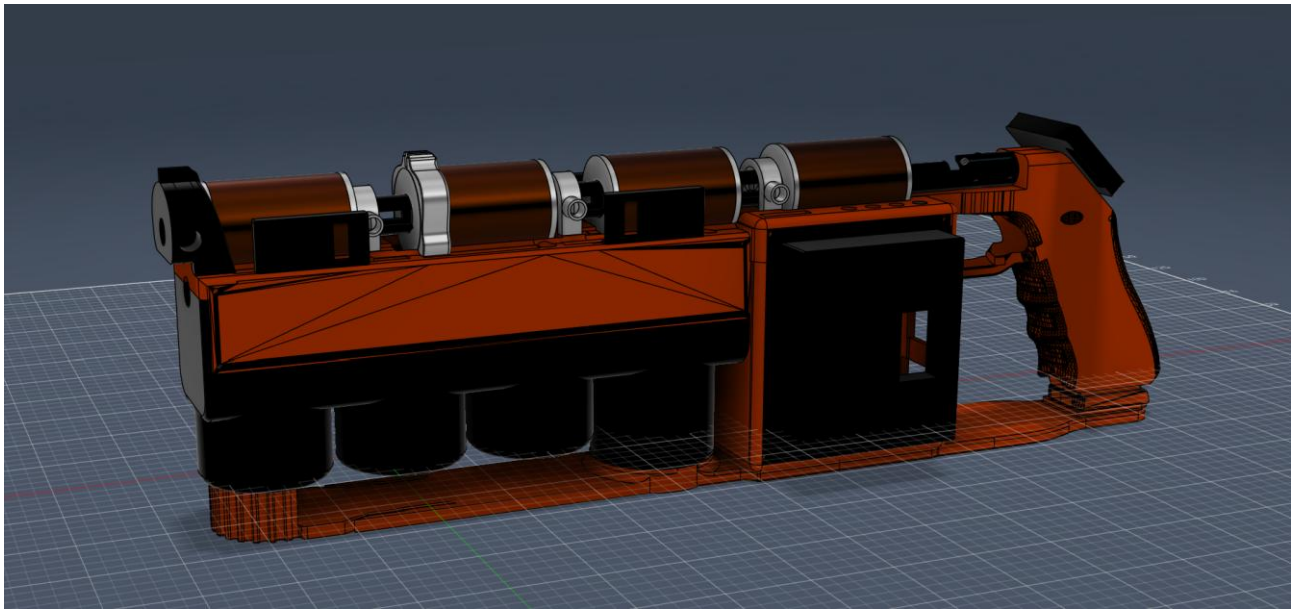

Fig. 1. Accelerator design in Fusion360

However, increasing the number of stages also has a downside. First, it is necessary to ensure compact placement of the coils and coordinate their geometry with the projectile length and body dimensions. Second, it is necessary to correctly choose the triggering moment of each stage. In a multistage accelerator, an error at an early stage affects the initial projectile velocity before the subsequent coils and therefore the optimal conditions for their activation, which nullifies all the results.

Synchronization can be carried out in different ways: by preset time delays, by position sensor signals, or by using hybrid systems. The use of IR position sensors

makes it possible to take into account the actual movement of the projectile, but even in this case the sensor offset remains an important parameter. It is this offset that determines the delay between the moment the projectile is detected and the application of the control signal to the stage thyristor.

To describe the processes in the accelerator, the properties of the discharge circuit are also important. The coil and the capacitor form an oscillatory system. The capacitor discharge time is:

$$T = \frac{\pi\sqrt{LC}}{2}$$

where:

L – coil inductance

C – capacitor capacitance.

This relationship is important when analyzing the duration of the current pulse, since a pulse that is too long may lead to braking of the projectile after it passes the coil center, while a pulse that is too short may result in incomplete use of the capacitor energy.

1.3. Numerical Modeling and Experimental Methods for Studying Coilgun Systems

Simulations occupy a significant place in the study of coil accelerators. They make it possible to evaluate the magnetic field distribution, the current in the coil, the force acting on the projectile, and also to predict the change in its velocity depending on sensor offset. Modeling is especially useful when searching for the optimal stage parameters and optimal conditions for coil activation.

Finite element methods are widely used to calculate magnetic fields. Such methods make it possible to obtain the dependence of the force acting on the

projectile on its position relative to the coil, as well as to estimate the change in system parameters over time, as shown in Fig. 2.

Current (A)	Voltage (V)	Force (N)	Velocity (m/s)	Position x (mm)	Time (µs)
26.309626399340	448.68451868003	6.4658091943318	0.1000000027369	0.0049999999999	50
49.271880426762	446.22092465869	7.5550334971384	0.1319797063493	0.0100000001368	100
72.135869813095	442.61413116804	22.297300384686	0.2263619560017	0.0165989854543	150
93.275494734583	437.95035643131	35.228812004969	0.3754820051666	0.0279170832543	200
112.36699765639	432.33200654849	46.846989402578	0.5737806410093	0.0466911835127	250
129.45699216119	425.85915694043	57.283352643444	0.8162553620223	0.0753802155632	300
144.63248916304	418.62753248227	66.592574133262	1.0981350895412	0.1161929836643	350
158.00381814734	410.72734157491	74.997002920941	1.4155899262589	0.1710997381413	400
169.71072514246	402.24180531778	82.612758093261	1.7652814953865	0.2418792344543	450

Fig. 2. Change in system parameters over time.

Based on the simulation results, it is possible to determine the values of offset **L** at which acceleration is maximal.

However, numerical modeling cannot fully replace experiment. A real setup always differs from an idealized model due to losses in conductors, the properties of the ferromagnetic projectile material, mechanical and manufacturing tolerances in the construction, and coil heating. Therefore, an obligatory stage of the study is experimental verification of the simulation results.

In experimental studies of coil accelerators, projectile velocity is usually determined from the time of passage between two sensors at a known distance between them. This makes it possible to calculate the average velocity over individual sections of the barrel and analyze the contribution of each stage. Then, using the known projectile mass, its kinetic energy is calculated:

$$E_k = \frac{mv^2}{2}.$$

where **m** is the projectile mass and **V** is its velocity.

Thus, the key factors are the geometry of the coils, the accuracy of determining the projectile position, and the choice of the activation moment of each stage. Therefore, the study of the dependence of efficiency on the stage activation delay is a relevant task for both experimental and computational research.

Chapter 2. Research Materials and Methods

2.1. Design of the Experimental Setup

For the study, a four-stage coil-type electromagnetic mass accelerator was designed and manufactured. The setup was created in a compact body produced by 3D printing from PETG plastic. The total length of the device is 37 cm, and the height is 12 cm. The design of the accelerator is shown in Fig. 1.

The accelerator contains four electromagnetic coils. The inner diameter of each coil is 12 mm, while the inner diameter of the barrel is 8 mm. The distance between adjacent coils along the barrel is 19.2 mm. A steel cylinder with a diameter of 7.6 mm, a length of 31 mm, and a mass of 11 g was used as the projectile.

The first and second coils were wound with 344 turns each of enameled wire with a diameter of 0.71 mm. The third and fourth coils were wound with 314 turns each of enameled wire with a diameter of 1 mm. The inductance of the first and second coils is 792.3 μH each, while that of the third and fourth coils is 567 μH each. Different winding was necessary to achieve the optimal barrel length, because the greater the inductance, the greater the capacitor discharge time, and therefore the greater the parameter **L**.

Each stage was powered by a separate 1000 μF capacitor rated for 450 V. Thus, the accelerator has four identical capacitors, one for each coil. The capacitors were charged to 420 V using a step-up ZVS converter. The total energy stored in the four capacitors was 352 J.

The power section was switched by **70TPS12** thyristors. The thyristors were controlled by an **ESP32** microcontroller via optocouplers providing galvanic isolation between the power and control sections of the circuit. This solution increased operational safety and eliminated high-voltage interference on the control electronics.

Four infrared pairs were used to determine the projectile position, each consisting of an infrared LED and a phototransistor. The first three sensors were placed before the corresponding coils and were used to trigger the next stage, while the fourth infrared pair was placed after the last coil and was used to register the projectile's passage at the exit, making it possible to determine its velocity on the final section of the trajectory. [3]

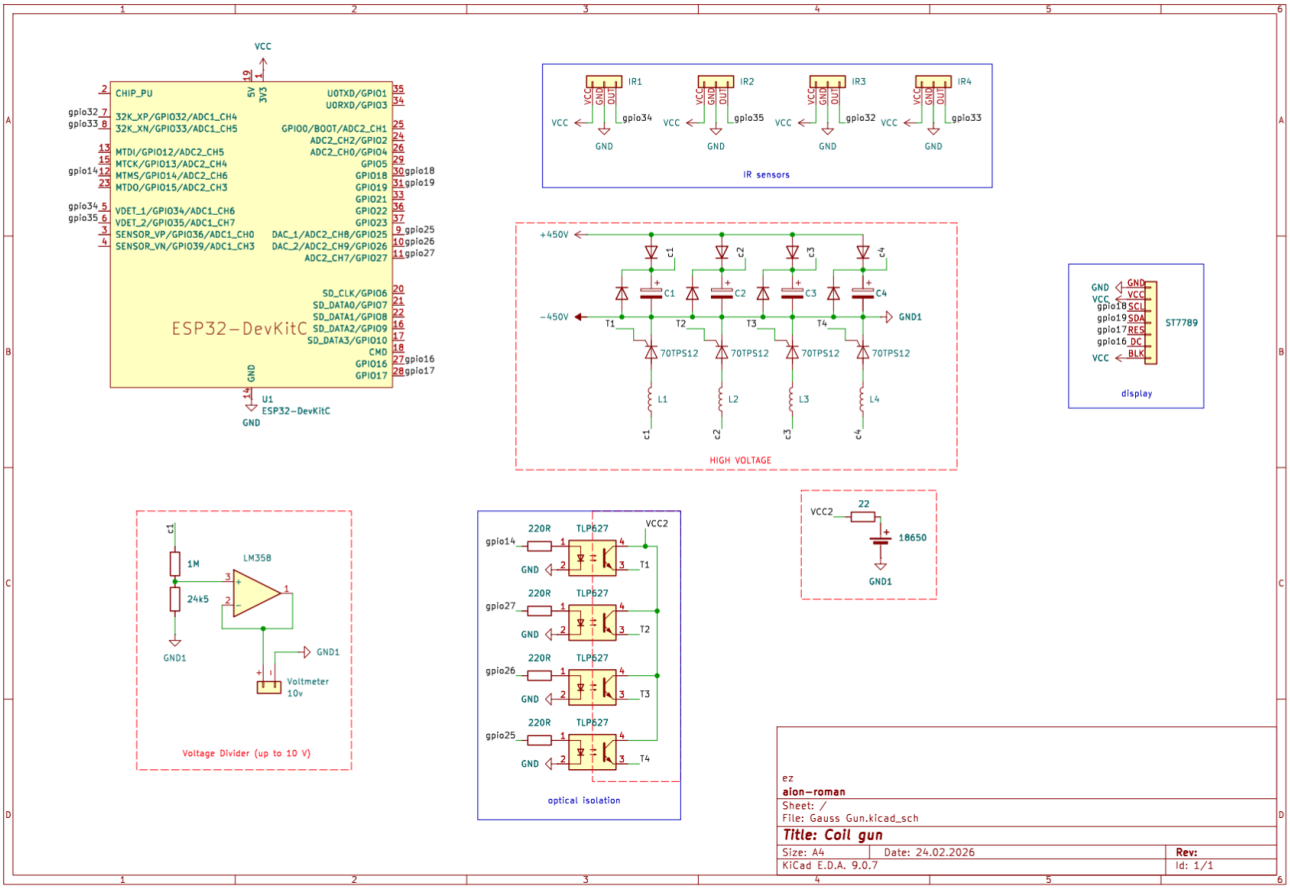

Fig. 3. Electrical diagram of the four-stage electromagnetic mass accelerator

The experimental setup also included: an **ESP32** microcontroller, 4 LM393 comparators, 2 switches, 1 non-latching button, SMD 0805 LED, resistors, a laser module, BMS 3S, a 2N7002 transistor, 8 UF4007 diodes, 5 18650 batteries, an IPS TFT display, a 1N47 Zener diode, an 18650 battery holder, LED, 4 TLP627 optocouplers, an LM358 operational amplifier, an AMS1117 3.3 V voltage regulator, 2 IRF3205 transistors, a 32 V digital voltmeter, and a TTP223 touch button module. See Fig. 3.

2.2. Operating Principle and Control System

The operating principle of the setup is based on the sequential activation of four electromagnetic coils as the ferromagnetic projectile passes along the barrel. When the projectile crosses the next infrared sensor, a signal appears and is sent to the **ESP32** microcontroller, which issues a control pulse to the corresponding optocoupler, opening the thyristor and starting the capacitor discharge through the coil.

An important synchronization parameter was the distance **L** from the infrared sensor to the beginning of the corresponding coil. It was this distance that determined the time delay between the moment the projectile position was registered and the beginning of the formation of the stage magnetic field.

2.3. Method for Measuring Velocity and Calculating Efficiency

The projectile velocity was determined from the time of its movement between neighboring infrared sensors at a known distance between them. The velocity value calculated in this way was the average projectile velocity over the corresponding section of the trajectory.

The following distances and time intervals were used for each section:

V1 = 0.042 / t1, where **t1** is the time between the triggering of signals **D4 = LOW** and **D34 = HIGH**;
V2 = 0.072 / t2, where **t2** is the time between the triggering of signals **D34 = HIGH** and **D35 = HIGH**;
V3 = 0.063 / t3, where **t3** is the time between the triggering of signals **D35 = HIGH** and **D32 = HIGH**;
V4 = 0.057 / t4, where **t4** is the velocity between the triggering of signals **D32 = HIGH** and **D33 = HIGH**.

The obtained values were the average projectile velocities after passing the corresponding sections of the accelerator. The experimental stage-by-stage velocity values were 16.3 m/s, 24.2 m/s, 31.1 m/s, and 36.5 m/s, respectively.

Next, the kinetic energy of the projectile was calculated:

$$E_k = \frac{mv^2}{2}.$$

where **m** is the projectile mass and **V** is its velocity.

The efficiency of the setup can then be determined as the ratio of the projectile's kinetic energy to the energy stored in the capacitors:

$$\eta = \frac{KE}{E_{\text{cap}}} = \frac{mv^2/2}{E_{\text{cap}}}$$

The energy stored in one capacitor was calculated by the formula: $E_{\text{cap}} = \frac{CV^2}{2}$

where **C** is the capacitor capacitance and **U** is its charging voltage.

At **C = 1000 μF** and **U = 420 V**, the energy of one capacitor was **88.2 J**, and the total energy of four capacitors was **352.8 J**. [2]

2.4. Numerical Modeling Method

For preliminary analysis of the electromagnetic accelerator operation, simulations in the **FEMM** program were used.

The model took into account the geometric parameters of the coils, the projectile dimensions, the power parameters, and the positions of the system elements. Based on the calculation results, the magnetic field distribution, the force acting on the projectile, the change in its velocity, and the influence of the spatial parameter **L** determining the stage activation delay were established.

As a result of the basic modeling, the following projectile velocity values after passing the stages were obtained:

Stages	Model. Projectile velocity, m/s	Corrected model. Projectile velocity, m/s
1	19,1	18,5
2	28,5	26,7
3	36,7	33,8
4	41,9	39,3

Table 1. Comparison of projectile velocities in the model and in the corrected model

After corrections were introduced into the model, the calculated values became closer to reality. These data were later compared with the experimental projectile velocity values.

2.5. Limitations of the Experimental Methodology

The methodology used has a number of disadvantages. First, the velocity determined by the sensors is the average velocity over the section between two measurement points rather than the instantaneous velocity at a specific point. Second, no current and voltage oscillograms were recorded in the experiment. Third, the real conditions of projectile acceleration may differ from the model due to losses in conductors, peculiarities of thyristor switching, and inaccuracies in coil manufacturing.

Despite this, the chosen methodology makes it possible to compare the experimental and calculated output velocity data and to evaluate the influence of stage synchronization on the overall efficiency of the accelerator.

Chapter 3. Research Results and Discussion

3.1. Development and Implementation of the Experimental Setup

In the course of the work, an experimental setup of a four-stage coil-type electromagnetic mass accelerator was designed and manufactured. The design of the setup made it possible to implement a compact multistage projectile acceleration scheme with a total device length of 37 cm and a height of 12 cm. The body was made by 3D printing from PETG plastic, which ensured sufficient structural strength and accurate positioning of the coils, sensors, and barrel.

The experimental setup demonstrated operability and suitability for studying the influence of stage timing synchronization on acceleration efficiency. Thus, the first research objective related to the design and manufacture of the four-stage electromagnetic mass accelerator shown in Fig. 4 was completed.

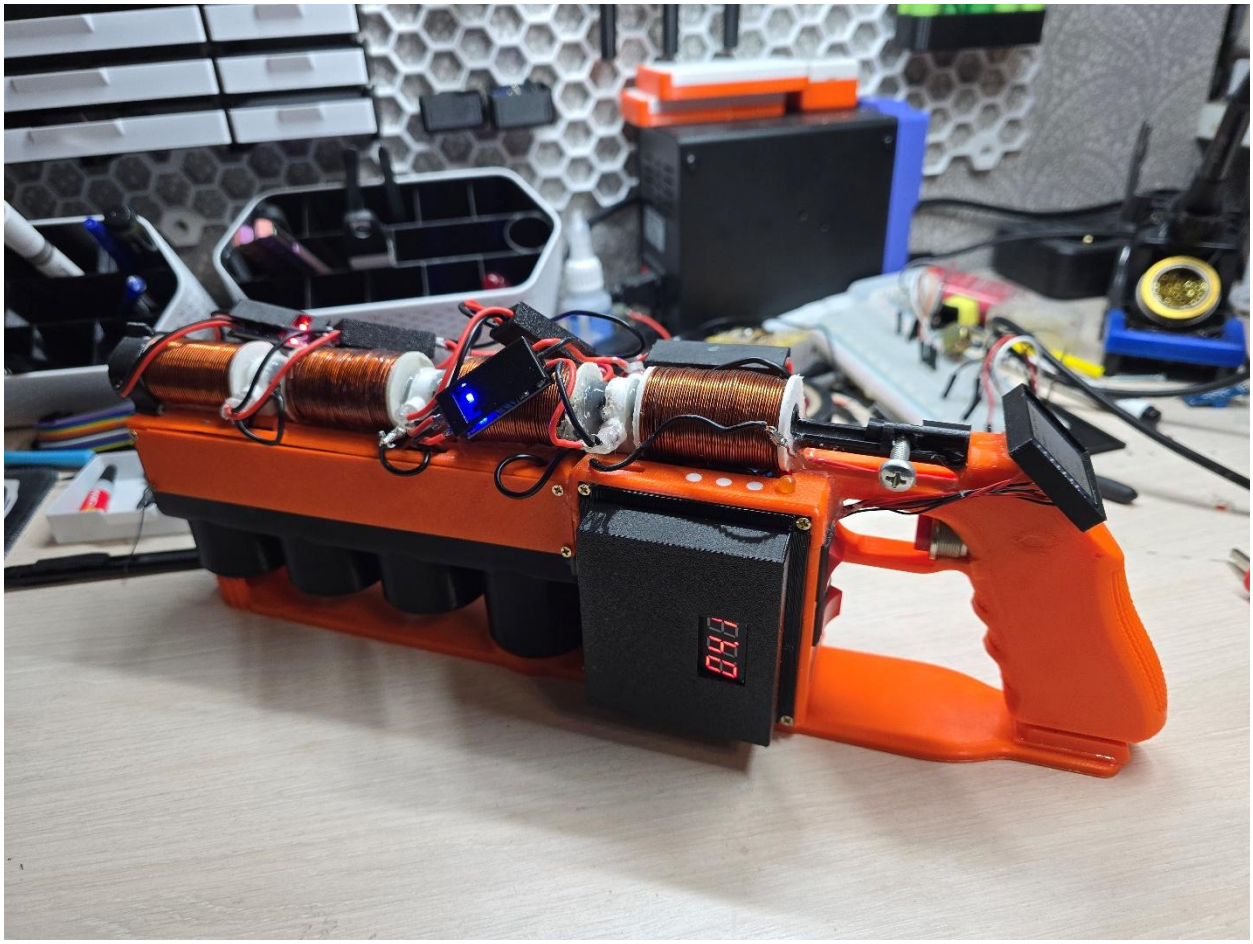

Fig. 4. General view of the experimental setup

3.2. Results of Numerical Modeling and Determination of Stage Synchronization Parameters

For preliminary analysis of the accelerator operation, a large number of simulations were performed in the **FEMM** program. Modeling was used to estimate the force acting on the projectile and the change in its velocity while passing through consecutive acceleration stages.

In the basic model, the following calculated projectile velocities after each stage were obtained:

after the 1st stage – 19.1 m/s;

after the 2nd stage – 28.5 m/s;

after the 3rd stage – 36.7 m/s;

after the 4th stage – 41.9 m/s.

The obtained data showed a sequential increase in projectile velocity at each stage of motion.

Based on the modeling, the values of the spatial parameter **L**, determining the distance from the IR sensor to the beginning of the corresponding coil, were selected. The following values were determined for the setup:

for the first stage **L1** = 6.8 mm;

for the second stage **L2** = -12.8 mm;

for the third stage **L3** = -7 mm;

for the fourth stage **L4** = -5 mm.

A negative value of **L** means that the IR sensor is located before the coil. The values of **L** were selected on the basis of simulations, after which the chosen parameters were verified experimentally. These data were used as the optimal stage activation values.

3.3. Implementation of the Control System and Experimental Measurement of Projectile Velocity

At the next stage, a control system for the accelerator stages was implemented using an **ESP32** microcontroller and four infrared position sensors. The first three sensors were used to trigger the corresponding coils, while the fourth one was used to measure the projectile velocity after passing the last stage.

Experimental measurements were carried out by determining the average velocity over the sections between the sensors. Based on the results of a series of shots, the following average projectile velocity values were obtained:

after the 1st stage – 16.3 m/s;

after the 2nd stage – 24.2 m/s;

after the 3rd stage – 31.1 m/s;

after the 4th stage – 36.5 m/s.

An additional qualitative result was that the accelerated projectile was capable of penetrating a block of paper about 300 pages thick; see Fig. 5. This fact was not used as the main efficiency criterion; however, it is a clear confirmation of the presence of noticeable projectile kinetic energy at the output.

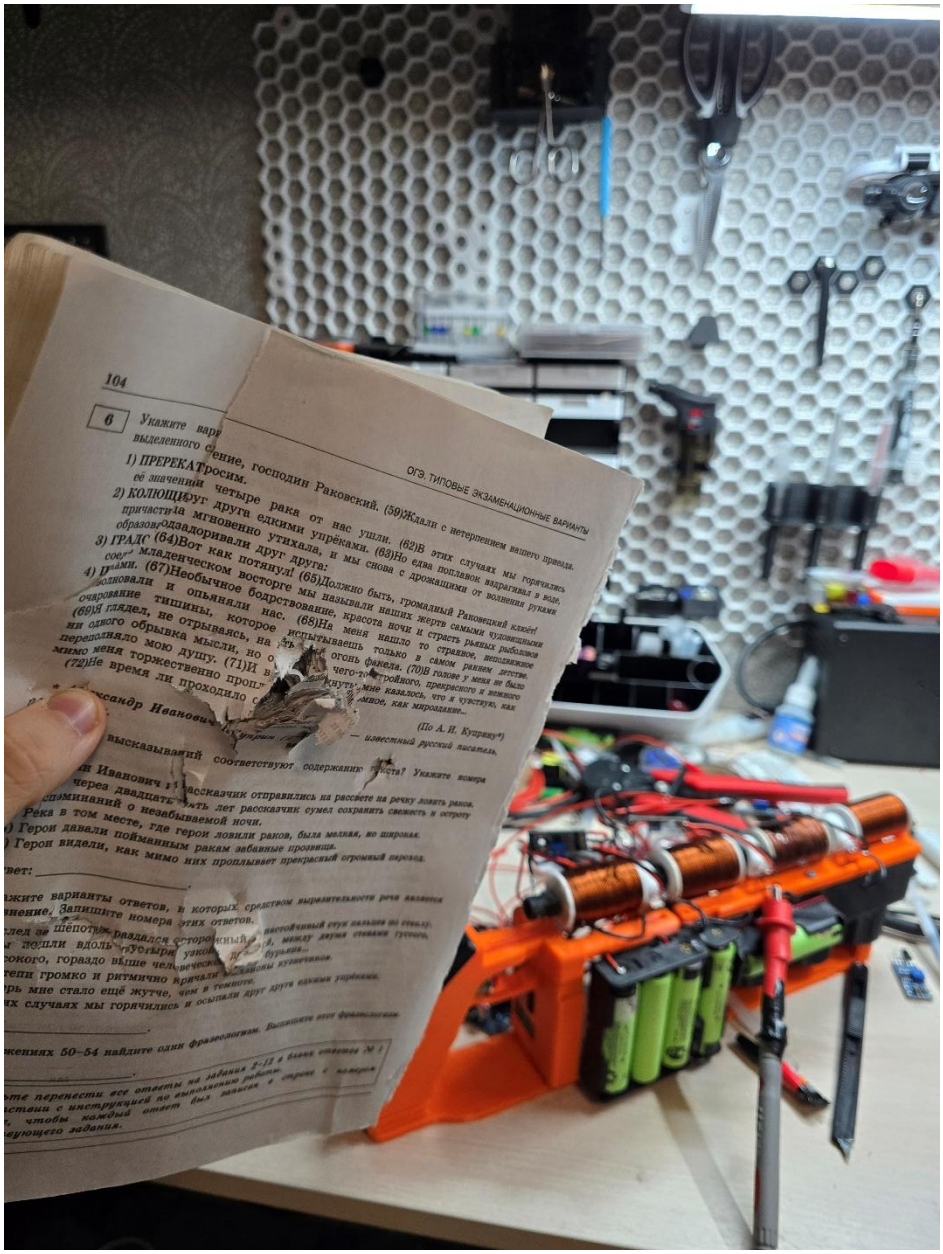

Fig. 5. Penetration of a block of paper about 300 pages thick

3.4. Calculation of the Efficiency of the Setup

To evaluate the efficiency of the accelerator, the efficiency coefficient was calculated as the ratio of the projectile's kinetic energy to the total energy stored in the capacitors.

The projectile mass was:

$m = 0.011$ kg

The experimental final projectile velocity after passing four stages was:

Then the projectile kinetic energy is:

$Ek = mv^2 / 2 = (0.011 \times 36.5^2) / 2 \approx 7.33$ J

The total energy of the four capacitors was:

$Ecap = 352$ J

Therefore, the efficiency of the experimental setup is:

$\eta exp = 7.33 / 352 \approx 0.0208 \approx 2.1\%$

For comparison, the efficiency according to the basic model was calculated at a final velocity of **41.9 m/s**:

$Ek,mod1 = (0.011 \times 41.9^2) / 2 \approx 9.66$ J

$\eta mod1 = 9.66 / 352 \approx 0.0274 \approx 2.7\%$

After corrections were introduced into the model, the final velocity became **39.3 m/s**. In this case:

$Ekmod2 = (0.011 \times 39.3^2) / 2 \approx 8.49$ J

$\eta mod2 = 8.49 / 352 \approx 0.0241 \approx 2.4\%$

Thus, the experimentally obtained efficiency of the setup was about **2.1%**, which is somewhat lower than both the value of the basic model and the value of the corrected model. However, even taking losses into account, the setup demonstrated stable operation and predictable conversion of stored electrical energy into the kinetic energy of the projectile. [2]

3.5. Influence of the Synchronization Parameter L on Accelerator Efficiency

One of the main objectives of this study was to investigate the influence of the parameter **L**, determining the distance from the IR sensor to the beginning of the corresponding coil, on the efficiency of the electromagnetic accelerator. This parameter

in fact sets the stage activation timing, since it determines the projectile's position relative to the coil at the moment the control signal is generated.

The analysis carried out below showed that efficiency strongly depends on the choice of parameter **L**. Even a slight displacement of the sensor relative to its optimal position leads to a strong change in the moment of coil activation, which in turn changes the interaction of the magnetic field with the projectile. If **L** is chosen unsuccessfully, part of the coil energy is spent not on acceleration, but on inefficient use of energy or on a braking effect on the projectile.

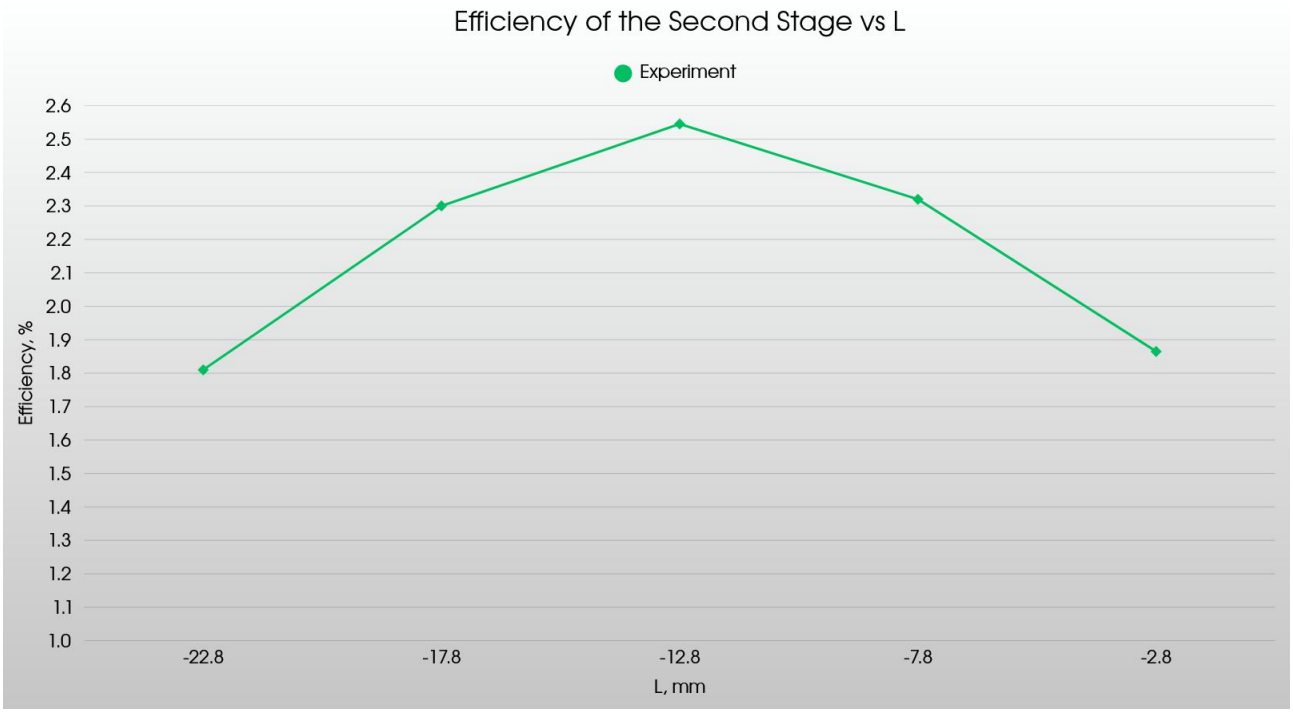

Fig. 6. Graph of the dependence of the second stage efficiency on L

According to the results of the study, it was established that the dependence of efficiency on parameter **L** applies both to individual stages and to the entire setup as a whole. The most illustrative was the dependence of the efficiency of the second stage on displacement **L**, for which a separate graph was plotted and presented in Fig. 6. Analysis of this graph showed the presence of an optimal range of values of parameter **L**.

In addition, it was established that after reducing parameter **L** of the first stage by only **5 mm** relative to the optimal value, the final efficiency of the setup decreased by **0.8%**, that is, it was reduced almost by half; see the graph presented in Fig. 7. This indicates the high sensitivity of a multistage electromagnetic accelerator to the choice of synchronization parameters. For such systems, even a slight deviation in the activation moment of one of the stages leads not only to a decrease in velocity, but also to a change in the operating conditions of the subsequent stages, which further reduces the efficiency of the setup.

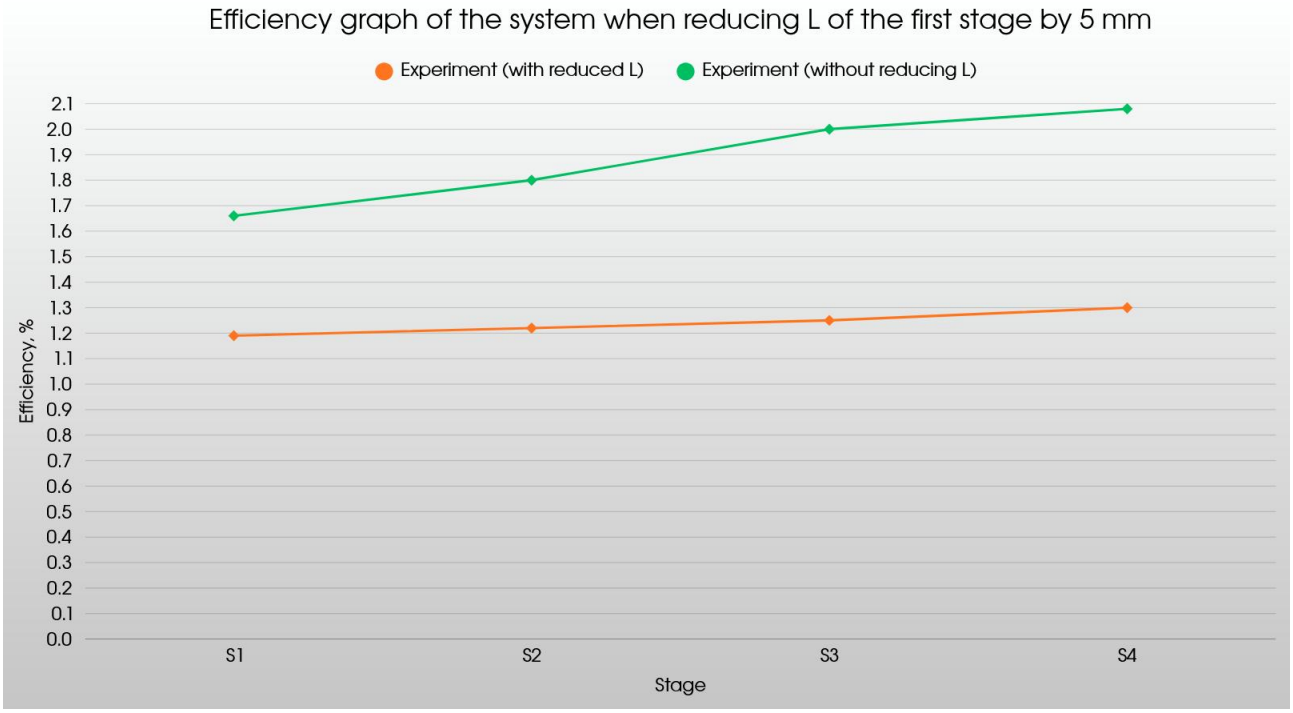

Fig. 7. Graph of the setup efficiency when L of the first stage is reduced by 5 mm

A brief comparison with the numerical modeling in Fig. 8 shows that the FEMM calculated data also predict the existence of an optimal range of **L** values at which acceleration efficiency is maximal. The experimental results confirmed this pattern; however, the real setup turned out to be even more sensitive to changes in this parameter than the idealized model. This can be explained by additional losses in the electrical circuit, winding resistance, deviations of the real coil geometry, and other factors.

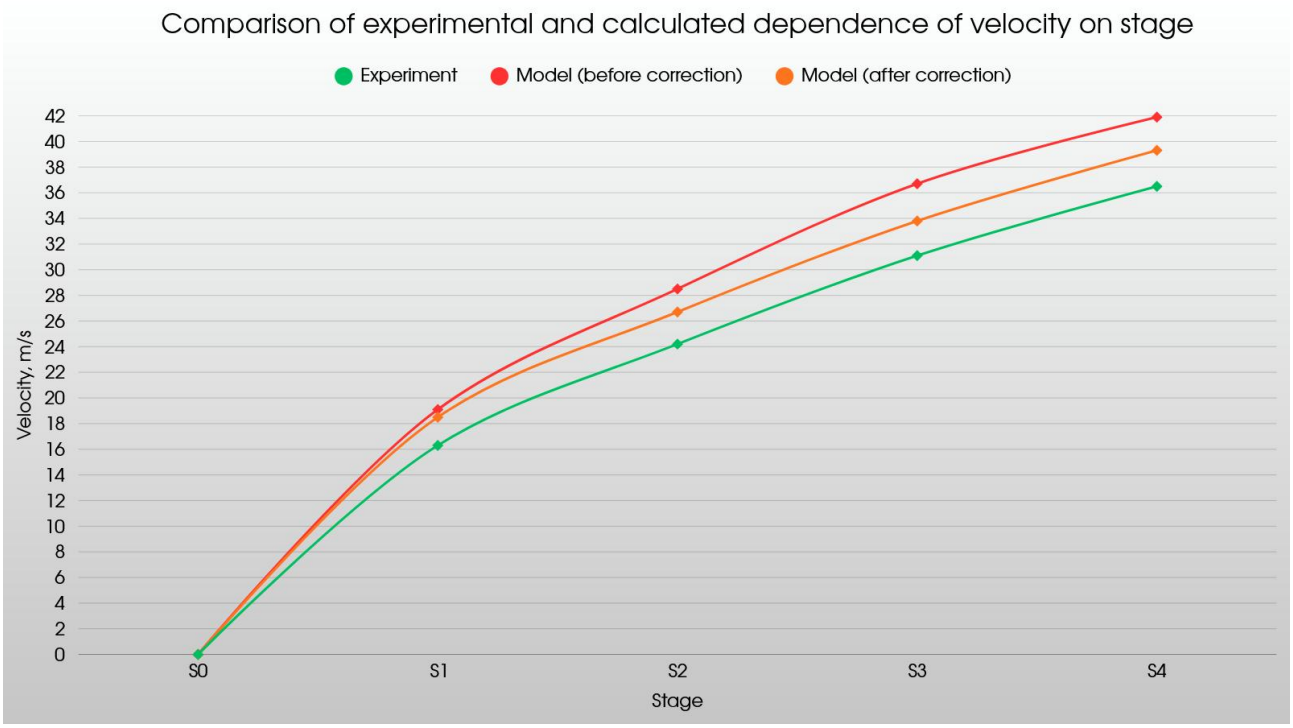

Fig. 8. Graph comparing the experimental and calculated dependence of velocity on stage

Thus, the conducted study showed that the efficiency of a four-stage electromagnetic mass accelerator is largely determined by the accuracy of choosing parameter **L**, and hence by the accuracy of stage timing synchronization. Therefore, optimization of sensor placement is one of the most effective ways of increasing the overall efficiency of the setup.

3.6. Analysis of the Causes of Discrepancies Between the Model and the Experiment

Despite the qualitative agreement between the simulation and experimental results, differences between them remain. The main reason for this is that the numerical model cannot fully take into account all real factors affecting the operation of the setup.

First, when refining the model, it was taken into account that the actual coil winding differed from the originally assumed one and was made in a hybrid way. This affects the real electromagnetic parameters of the system, including resistance and magnetic field distribution.

Second, in the corrected model it was taken into account that the capacitors were charged not to **450 V**, but to **420 V**. In addition, the voltage on them decreased further during aiming.

Third, the resistance of the coil winding was taken into account, which also causes additional energy losses and reduces the amplitude of the discharge current.

At the same time, a number of factors could not be fully taken into account in the model used. These include mechanical friction of the projectile in the barrel, heating of the coil windings, possible instability of the parameters of electronic components, as well as the peculiarities of thyristor switching in the real circuit. Separate influence could also be exerted by assembly errors, including small deviations in the geometry of the coils, body, and mutual arrangement of the sensors.

Thus, the discrepancy between the calculated and experimental data is explained by the combination of electrical, mechanical, and technological factors. At the same time, the corrected model describes the real setup significantly better than the original one, which confirms the need to take into account the actual design parameters when simulating electromagnetic fields. [1]

Conclusion

1. In the course of the work, a compact four-stage coil-type electromagnetic mass accelerator with microcontroller control, infrared projectile position sensors, and thyristor switching of the power stages was designed and manufactured. The experimental setup confirmed the operability of the chosen design and the possibility of implementing multistage electromagnetic acceleration in a compact body.

2. Using numerical modeling in the **FEMM** program, the stage synchronization parameters were determined and the projectile velocities after each stage were calculated. The basic model showed the possibility of achieving velocities of **19.1 m/s, 28.5 m/s, 36.7 m/s, and 41.9 m/s**, respectively, which confirmed the promise of the chosen accelerator design.

3. The implemented control system based on **ESP32** and infrared sensors ensured sequential coil activation in accordance with the projectile's position in the barrel. This made it possible to obtain stable multistage acceleration and to conduct experimental measurements of velocity at different sections of the barrel.

4. Based on the results of a series of experiments, the following average projectile velocities after passing the stages were obtained: **16.3 m/s, 24.2 m/s, 31.1 m/s, and 36.5 m/s**. Based on the final velocity and the total energy of the storage capacitors, the efficiency of the setup was calculated to be about **2.1%**.

5. The study showed that the efficiency of a four-stage electromagnetic accelerator significantly depends on the distance **L** between the infrared sensor and the beginning of the coil, which determines the stage activation timing. Changing this parameter affects both the efficiency of individual stages and the efficiency of the entire setup as a whole. At the same time, reducing parameter **L** of the first stage by only **5 mm** relative to the optimal value led to a decrease in the final efficiency coefficient by **0.8%**, that is, almost by half.

6. The main causes of discrepancies between the modeling and the experiment are energy losses in the real electrical circuit, a decrease in capacitor voltage before the shot, winding resistance, as well as factors not taken into account in the model, including projectile friction in the barrel channel and coil heating. Thus, the purpose of the work was achieved: the dependence of accelerator efficiency on stage timing synchronization was experimentally investigated, and the obtained results were compared with numerical modeling.

References

1. Meeker, D. *Finite Element Method Magnetics: HomePage*: electronic resource. – Available at: https://www.femm.info/wiki/HomePage.

2. Wikipedia. *Gauss gun*: electronic resource. – Available at: https://ru.wikipedia.org/wiki/Пушка_Гаусса.

3. Website about electromagnetic weapons – news: electronic resource. – Available at: https://gauss2k.narod.ru/.

4. Feynman, R. *The Feynman Lectures on Physics. Vol. 5: Electricity and Magnetism* / R. Feynman, R. Leighton, M. Sands. – Moscow: Mir, 1966. – Ch. 1. – pp. 9–27.

5. Hoshi, [Material on Habr at https://habr.com/ru/articles/174681/]: electronic resource. – Available at: https://habr.com/ru/articles/174681/.