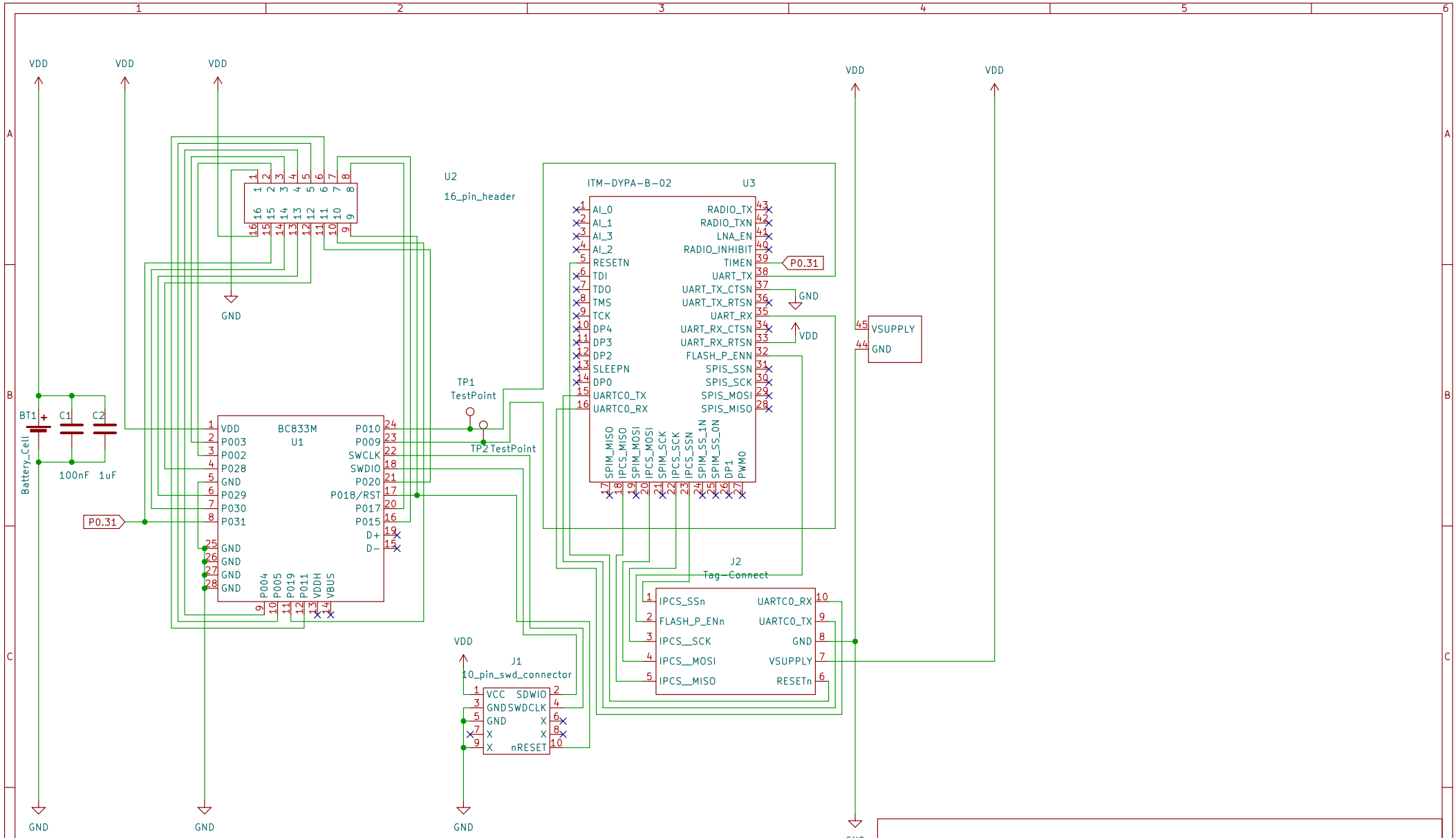

Said Alvarado−Marin
Charles Thonier
INRIA

Sheet: /
File: aiot_pcb_play.kicad_sch

Title: AIOT Play Schematic

Size: A4	Date: 2022−10−18	**Rev: v1.1**
KiCad E.D.A. kicad (6.0.0)		Id: 1/1