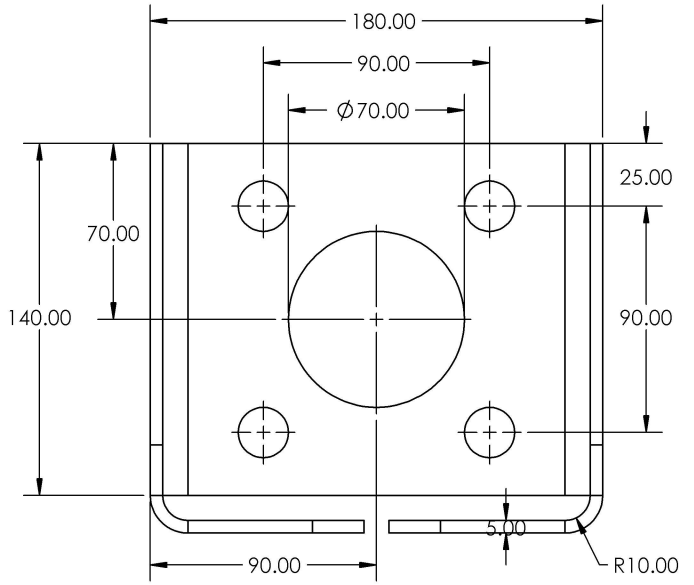

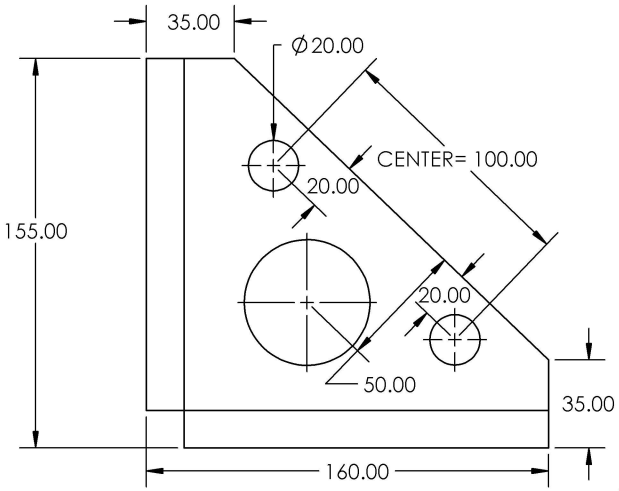

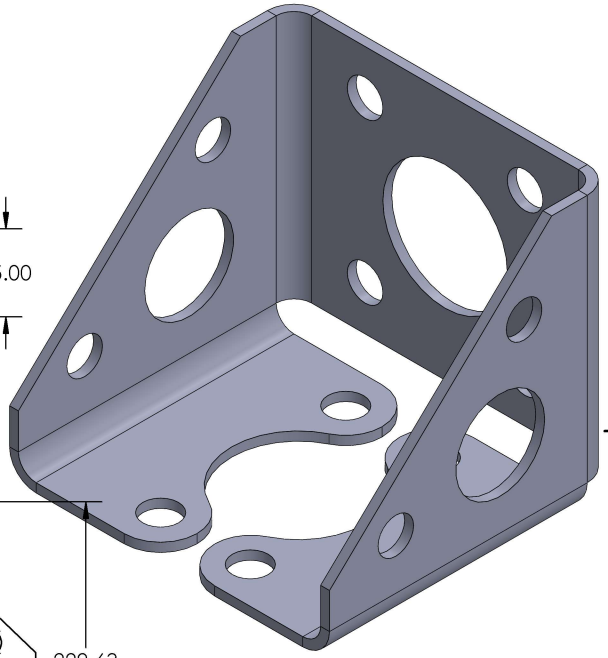

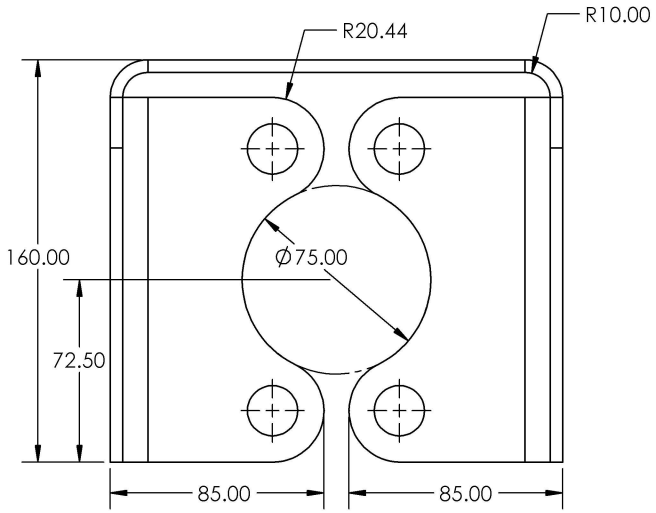

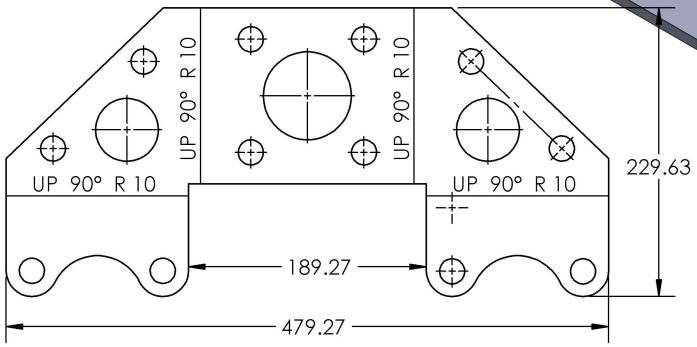

UNLESS OTHERWISE SPECIFIED: DIMENSIONS ARE IN MILLIMETERS SURFACE FINISH: TOLERANCES: LINEAR: ANGULAR:		FINISH:				DEBURR AND BREAK SHARP EDGES	DO NOT SCALE DRAWING / REVISION
	NAME	SIGNATURE	DATE				TITLE:
DRAWN	Airidas Romanovas						
CHK'D	Airidas Romanovas						
APPV'D	Airidas Romanovas						
MFG							
Q.A				MATERIAL:			DWG NO. Part1 / A3
				WEIGHT:			SCALE:1:2 / SHEET 1 OF 1