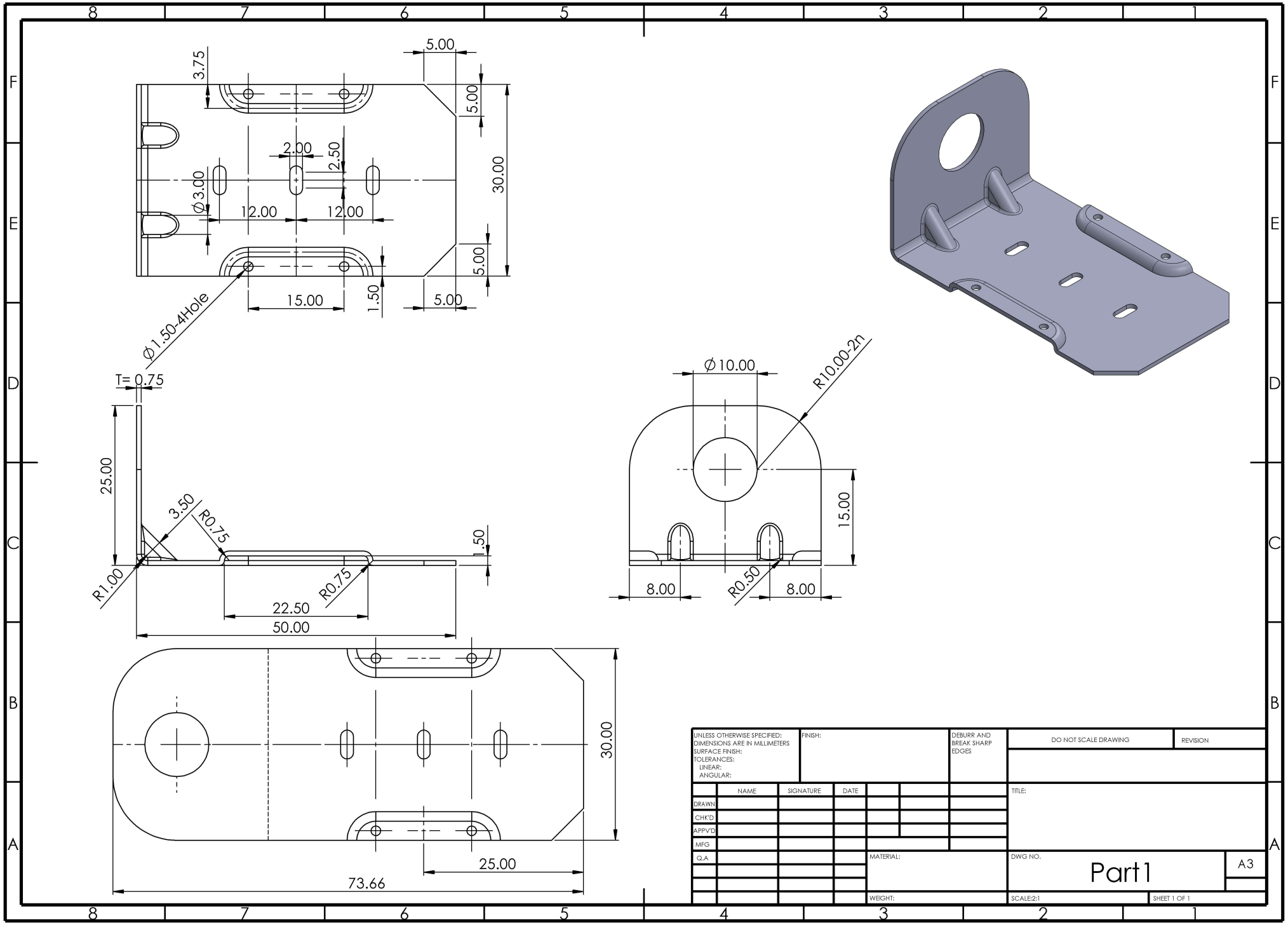
5.00
3.75
5.00
2.00
2.50
30.00
Ø3.00
12.00
12.00
5.00
15.00
1.50
5.00
Ø1.50-4Hole
T= 0.75
Ø10.00
R10.00-2n
25.00
3.50
R0.75
1.50
15.00
R1.00
R0.75
8.00
R0.50
8.00
22.50
50.00
30.00
25.00
73.66
UNLESS OTHERWISE SPECIFIED:
DIMENSIONS ARE IN MILLIMETERS
SURFACE FINISH:
TOLERANCES:
LINEAR:
ANGULAR:
FINISH:
DEBURR AND BREAK SHARP EDGES
DO NOT SCALE DRAWING
REVISION
NAME
SIGNATURE
DATE
DRAWN
CHK'D
APPV'D
MFG
Q.A
TITLE:
MATERIAL:
WEIGHT:
DWG NO.
Part1
A3
SCALE:2:1
SHEET 1 OF 1