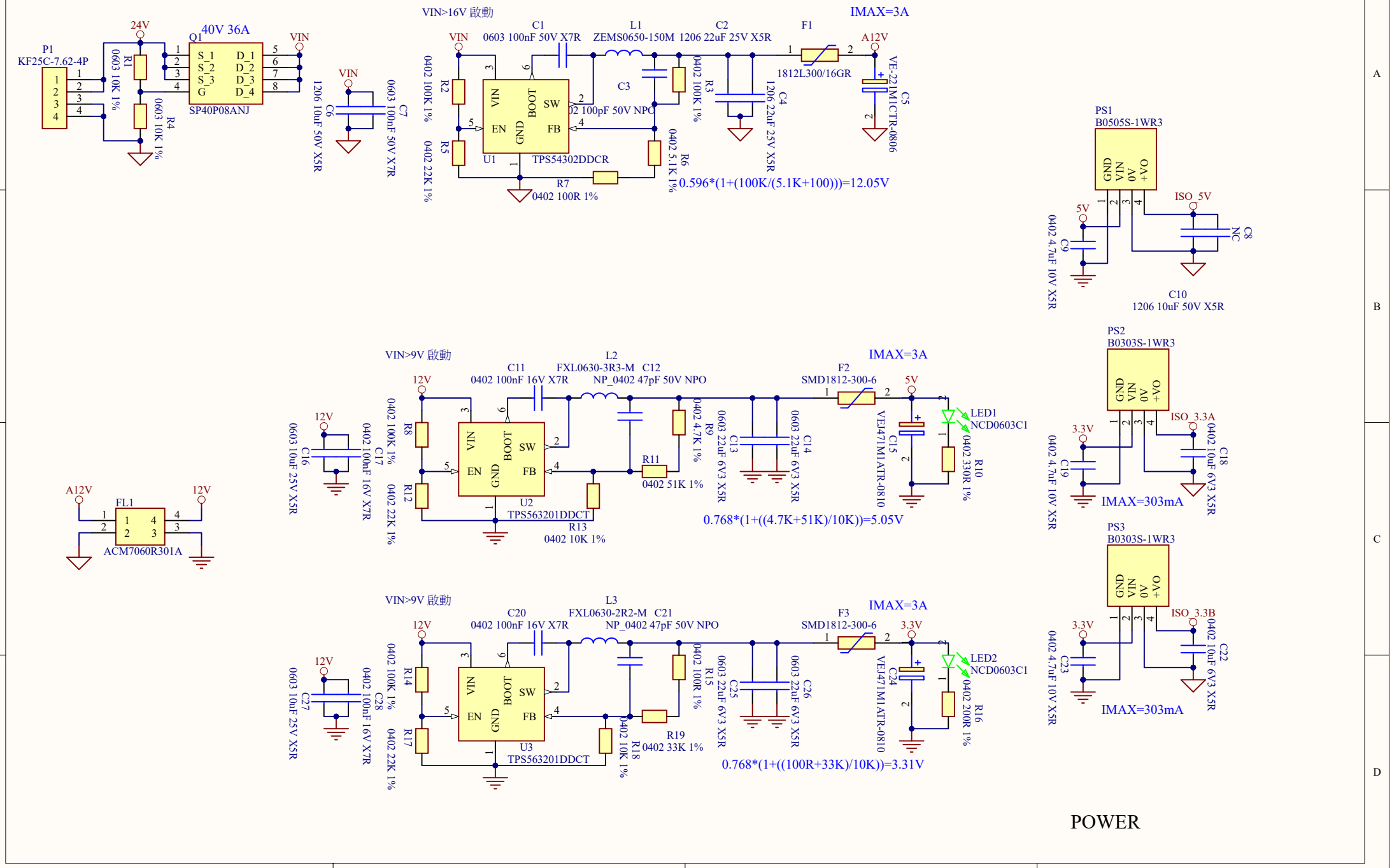
P1
KF25C-7.62-4P
24V
R1
0603 10K 1%
R4
0603 10K 1%
Q1
40V 36A
S_1
S_2
S_3
G
D_1
D_2
D_3
D_4
SP40P08ANJ
VIN
C6
1206 10uF 50V X5R
C7
0603 100nF 50V X7R
VIN>16V 啟動
C1
0603 100nF 50V X7R
L1
ZEMS0650-150M
C2
1206 22uF 25V X5R
F1
1812L300/16GR
IMAX=3A
A12V
C5
VE-221M1CTR-0806
R2
0402 100K 1%
R5
0402 22K 1%
U1
TPS54302DDCR
VIN
EN
GND
BOOT
SW
FB
C3
02 100pF 50V NPO
R3
0402 100K 1%
C4
1206 22uF 25V X5R
R6
0402 5.1K 1%
R7
0402 100R 1%
0.596*(1+(100K/(5.1K+100)))=12.05V
PS1
B0505S-1WR3
GND
VIN
0V
+VO
5V
ISO_5V
C9
0402 4.7uF 10V X5R
C8
NC
C10
1206 10uF 50V X5R
A12V
FL1
ACM7060R301A
12V
VIN>9V 啟動
C11
0402 100nF 16V X7R
L2
FXL0630-3R3-M
C12
NP_0402 47pF 50V NPO
F2
SMD1812-300-6
IMAX=3A
5V
LED1
NCD0603C1
R8
0402 100K 1%
R12
0402 22K 1%
C16
0603 10uF 25V X5R
C17
0402 100nF 16V X7R
U2
TPS563201DDCT
R9
0402 4.7K 1%
R11
0402 51K 1%
R13
0402 10K 1%
C13
0603 22uF 6V3 X5R
C14
0603 22uF 6V3 X5R
C15
VEJ471M1ATR-0810
R10
0402 330R 1%
0.768*(1+((4.7K+51K)/10K))=5.05V
PS2
B0303S-1WR3
3.3V
ISO_3.3A
C19
0402 4.7uF 10V X5R
C18
0402 10uF 6V3 X5R
IMAX=303mA
VIN>9V 啟動
C20
0402 100nF 16V X7R
L3
FXL0630-2R2-M
C21
NP_0402 47pF 50V NPO
F3
SMD1812-300-6
IMAX=3A
3.3V
LED2
NCD0603C1
R14
0402 100K 1%
R17
0402 22K 1%
C27
0603 10uF 25V X5R
C28
0402 100nF 16V X7R
U3
TPS563201DDCT
R15
0402 100R 1%
R19
0402 33K 1%
R18
0402 10K 1%
C25
0603 22uF 6V3 X5R
C26
0603 22uF 6V3 X5R
C24
VEJ471M1ATR-0810
R16
0402 200R 1%
0.768*(1+((100R+33K)/10K))=3.31V
PS3
B0303S-1WR3
3.3V
ISO_3.3B
C23
0402 4.7uF 10V X5R
C22
0402 10uF 6V3 X5R
IMAX=303mA
POWER

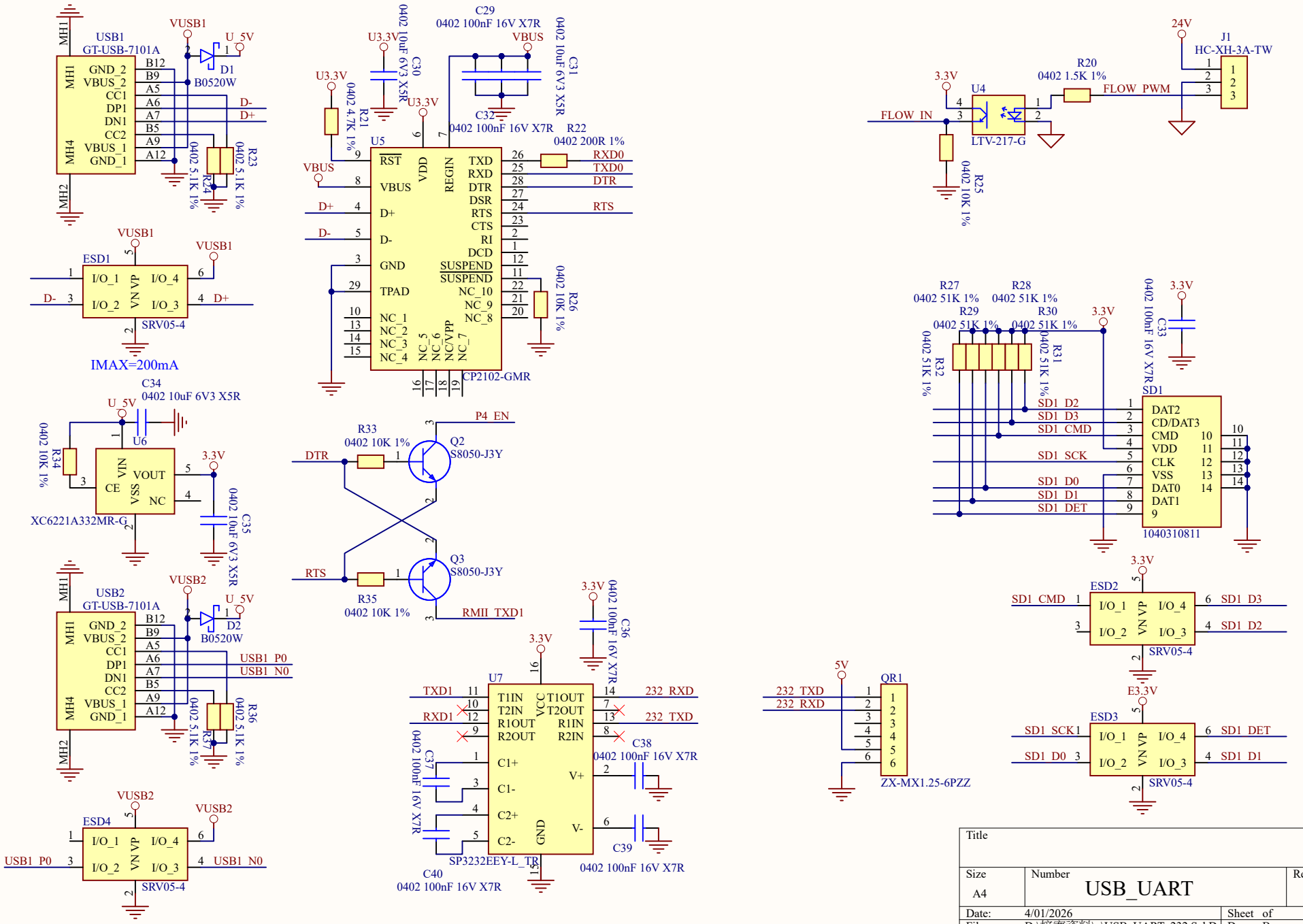
USB1
GT-USB-7101A
VUSB1
U_5V
D1
B0520W
D-
D+
R23
0402 5.1K 1%
R24
0402 5.1K 1%
ESD1
SRV05-4
IMAX=200mA
C34
0402 10uF 6V3 X5R
U6
XC6221A332MR-G
R34
0402 10K 1%
C35
0402 10uF 6V3 X5R
USB2
GT-USB-7101A
VUSB2
D2
B0520W
USB1_P0
USB1_N0
R36
0402 5.1K 1%
R37
0402 5.1K 1%
ESD4
SRV05-4
C29
0402 100nF 16V X7R
C30
0402 10uF 6V3 X5R
C31
0402 10uF 6V3 X5R
C32
0402 100nF 16V X7R
R21
0402 4.7K 1%
R22
0402 200R 1%
U5
CP2102-GMR
RXD0
TXD0
DTR
RTS
R26
0402 10K 1%
R33
0402 10K 1%
Q2
S8050-J3Y
P4_EN
Q3
S8050-J3Y
R35
0402 10K 1%
RMII_TXD1
C36
0402 100nF 16V X7R
U7
SP3232EEY-L_TR
232_RXD
232_TXD
C37
0402 100nF 16V X7R
C38
0402 100nF 16V X7R
C39
0402 100nF 16V X7R
C40
0402 100nF 16V X7R
24V
J1
HC-XH-3A-TW
R20
0402 1.5K 1%
FLOW_PWM
FLOW_IN
U4
LTV-217-G
R25
0402 10K 1%
R27
0402 51K 1%
R28
0402 51K 1%
R29
0402 51K 1%
R30
0402 51K 1%
R31
0402 51K 1%
R32
0402 51K 1%
C33
0402 100nF 16V X7R
SD1
1040310811
SD1_D2
SD1_D3
SD1_CMD
SD1_SCK
SD1_D0
SD1_D1
SD1_DET
ESD2
ESD3
SD1_SCK1
QR1
ZX-MX1.25-6PZZ
Title
Size
A4
Number
USB_UART
Revision
Date: 4/01/2026
Sheet of
File: D:\接案資料\..\USB_UART_232.SchDoc
Drawn By:

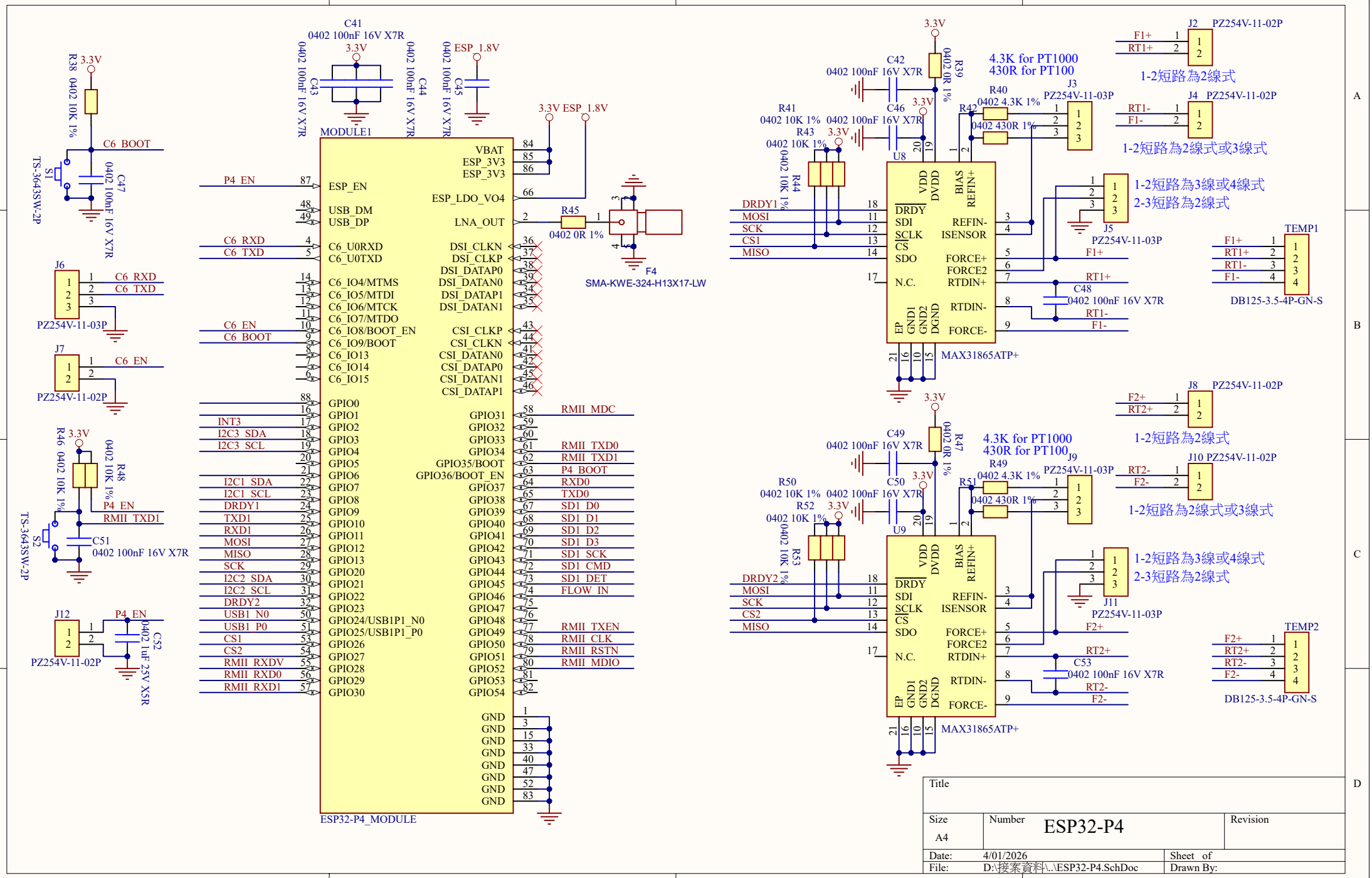
MODULE1
ESP32-P4_MODULE
ESP_EN
USB_DM
USB_DP
C6_U0RXD
C6_U0TXD
C6_IO4/MTMS
C6_IO5/MTDI
C6_IO6/MTCK
C6_IO7/MTDO
C6_IO8/BOOT_EN
C6_IO9/BOOT
C6_IO13
C6_IO14
C6_IO15
GPIO0
GPIO1
GPIO2
GPIO3
GPIO4
GPIO5
GPIO6
GPIO7
GPIO8
GPIO9
GPIO10
GPIO11
GPIO12
GPIO13
GPIO20
GPIO21
GPIO22
GPIO23
GPIO24/USB1P1_N0
GPIO25/USB1P1_P0
GPIO26
GPIO27
GPIO28
GPIO29
GPIO30
VBAT
ESP_3V3
ESP_LDO_VO4
LNA_OUT
DSI_CLKN
DSI_CLKP
DSI_DATAP0
DSI_DATAN0
DSI_DATAP1
DSI_DATAN1
CSI_CLKP
CSI_CLKN
CSI_DATAN0
CSI_DATAP0
CSI_DATAN1
CSI_DATAP1
GPIO31
GPIO32
GPIO33
GPIO34
GPIO35/BOOT
GPIO36/BOOT_EN
GPIO37
GPIO38
GPIO39
GPIO40
GPIO41
GPIO42
GPIO43
GPIO44
GPIO45
GPIO46
GPIO47
GPIO48
GPIO49
GPIO50
GPIO51
GPIO52
GPIO53
GPIO54
GND
P4_EN
C6_RXD
C6_TXD
C6_EN
C6_BOOT
INT3
I2C3_SDA
I2C3_SCL
I2C1_SDA
I2C1_SCL
DRDY1
TXD1
RXD1
MOSI
MISO
SCK
I2C2_SDA
I2C2_SCL
DRDY2
USB1_N0
USB1_P0
CS1
CS2
RMII_RXDV
RMII_RXD0
RMII_RXD1
RMII_MDC
RMII_TXD0
RMII_TXD1
P4_BOOT
RXD0
TXD0
SD1_D0
SD1_D1
SD1_D2
SD1_D3
SD1_SCK
SD1_CMD
SD1_DET
FLOW_IN
RMII_TXEN
RMII_CLK
RMII_RSTN
RMII_MDIO
3.3V
ESP_1.8V
C41 0402 100nF 16V X7R
C43 0402 100nF 16V X7R
C44 0402 100nF 16V X7R
C45 0402 100nF 16V X7R
R38 0402 10K 1%
C6_BOOT
S1 TS-3643SW-2P
C47 0402 100nF 16V X7R
J6 PZ254V-11-03P
J7 PZ254V-11-02P
R46 0402 10K 1%
R48 0402 10K 1%
S2 TS-3643SW-2P
C51 0402 100nF 16V X7R
J12 PZ254V-11-02P
C52 0402 1uF 25V X5R
R45 0402 0R 1%
F4 SMA-KWE-324-H13X17-LW
C42 0402 100nF 16V X7R
R39 0402 0R 1%
4.3K for PT1000
430R for PT100
J2 PZ254V-11-02P
1-2短路為2線式
R40 0402 4.3K 1%
R42 0402 430R 1%
J3 PZ254V-11-03P
J4 PZ254V-11-02P
1-2短路為2線式或3線式
R41 0402 10K 1%
R43 0402 10K 1%
C46 0402 100nF 16V X7R
U8
R44 0402 10K 1%
VDD
DVDD
BIAS
REFIN+
DRDY
SDI
SCLK
CS
SDO
N.C.
REFIN-
ISENSOR
FORCE+
FORCE2
RTDIN+
RTDIN-
FORCE-
EP
GND1
GND2
DGND
MAX31865ATP+
1-2短路為3線或4線式
2-3短路為2線式
J5 PZ254V-11-03P
C48 0402 100nF 16V X7R
TEMP1 DB125-3.5-4P-GN-S
C49 0402 100nF 16V X7R
R47 0402 0R 1%
R49 0402 4.3K 1%
R51 0402 430R 1%
J8 PZ254V-11-02P
J9 PZ254V-11-03P
J10 PZ254V-11-02P
R50 0402 10K 1%
R52 0402 10K 1%
C50 0402 100nF 16V X7R
U9
R53 0402 10K 1%
J11 PZ254V-11-03P
C53 0402 100nF 16V X7R
TEMP2 DB125-3.5-4P-GN-S
Title
Size A4
Number ESP32-P4
Revision
Date: 4/01/2026
Sheet of
File: D:\接案資料\..\ESP32-P4.SchDoc
Drawn By:

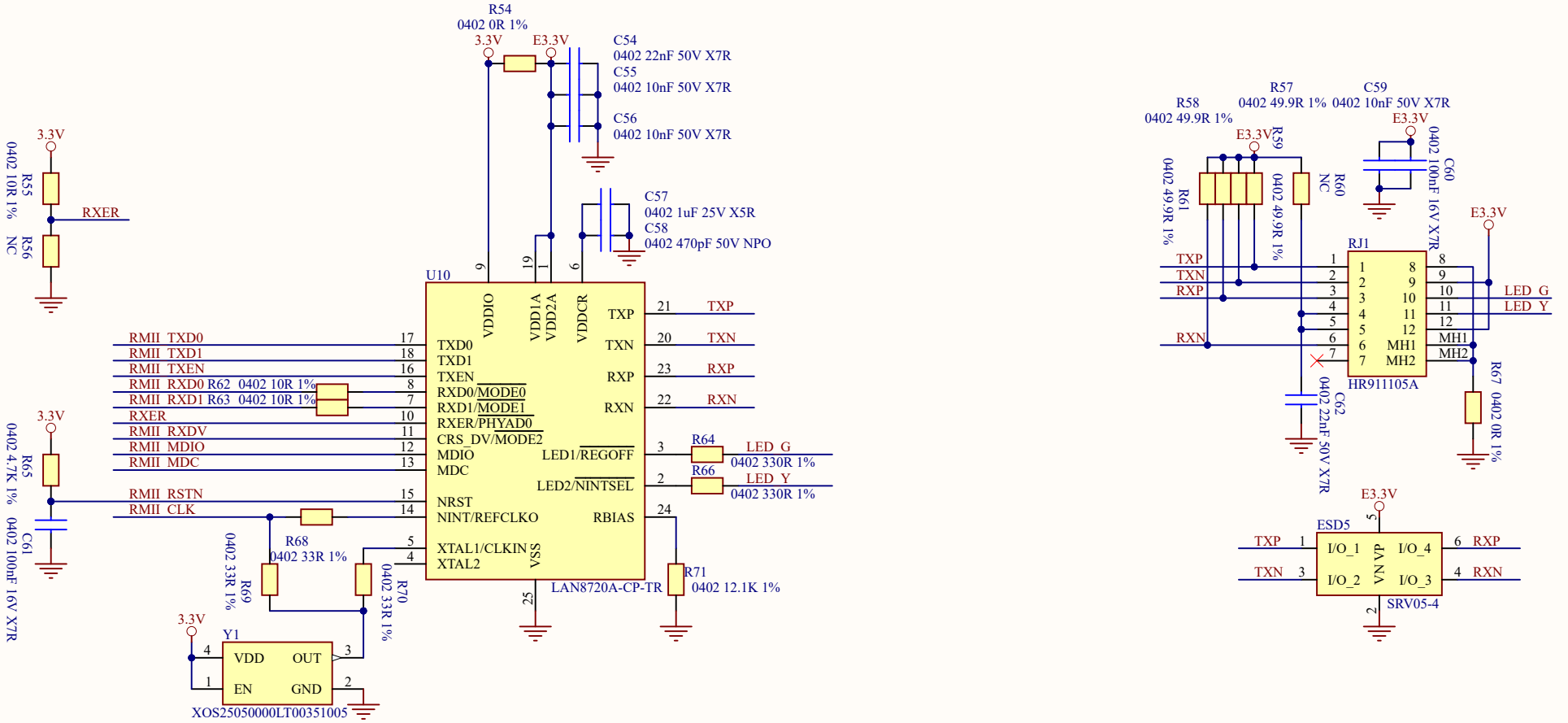

Title		
Size A4	Number LAN8720A	Revision
Date: 4/01/2026		Sheet of
File: D:\接案資料\..\LAN8720A.SchDoc		Drawn By:

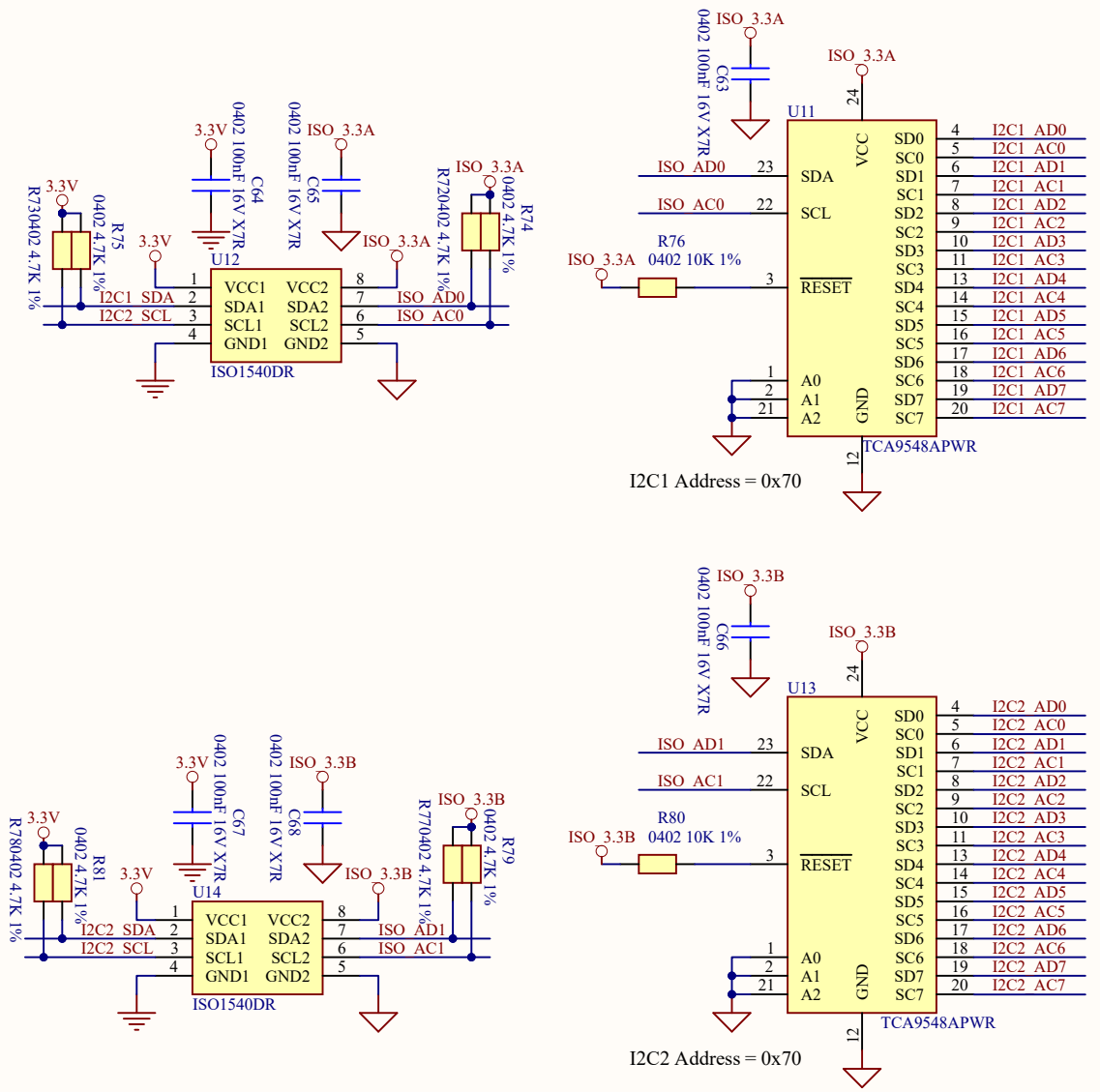

Title		
Size A4	Number TCA9584A	Revision
Date: 4/01/2026		Sheet of
File: D:\接案資料\..\TCA9548APW.SchDoc		Drawn By:

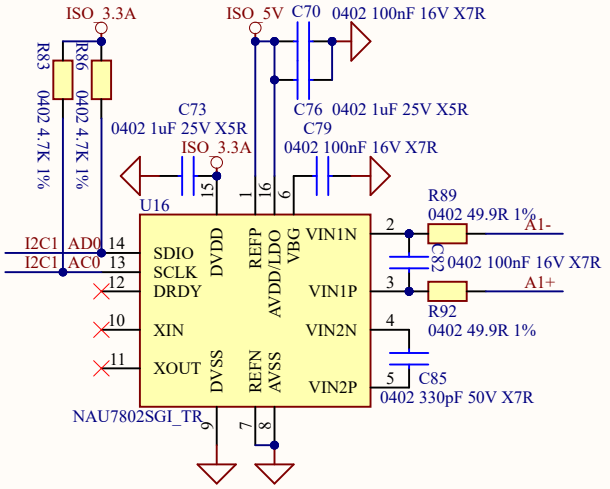

I2C1 Address = 0x2A

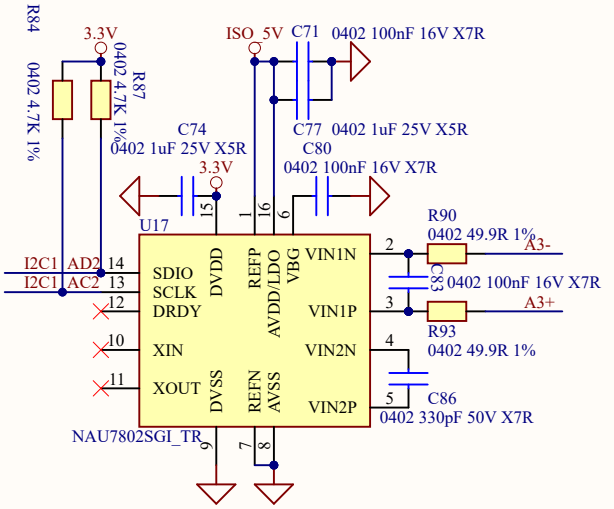

I2C1 Address = 0x2A

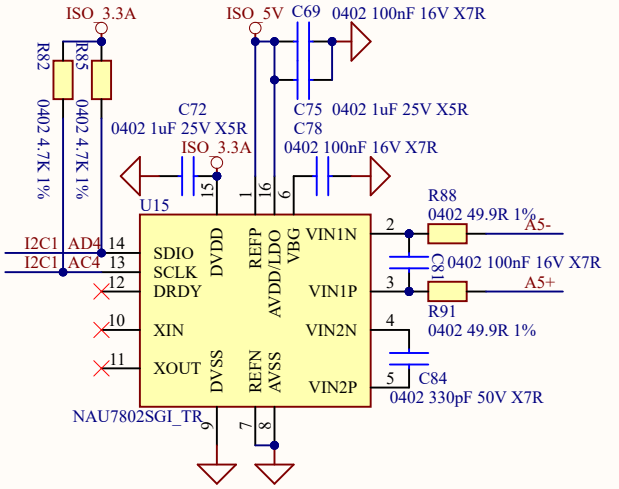

I2C1 Address = 0x2A

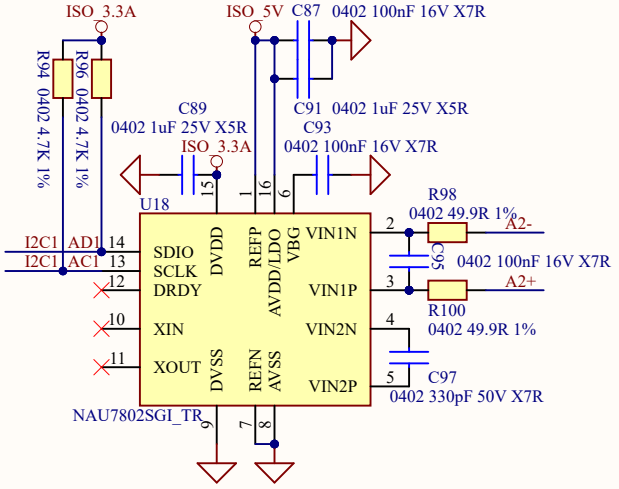

I2C1 Address = 0x2A

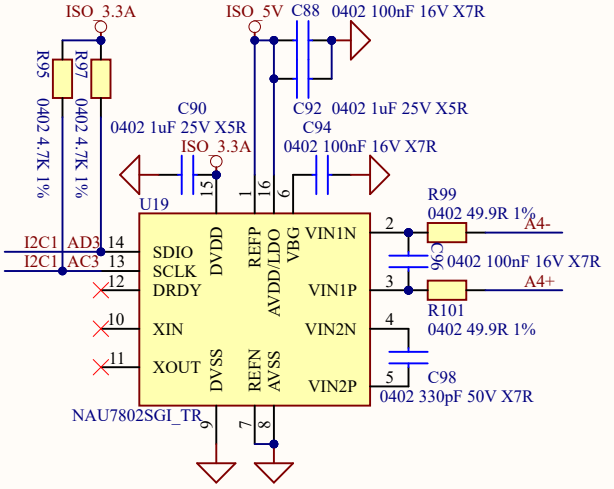

I2C1 Address = 0x2A

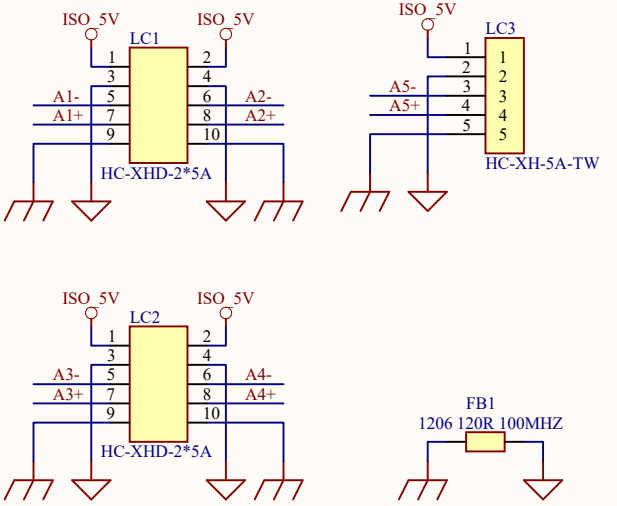

Title			
Size A4	Number	NAU7802	Revision
Date: 4/01/2026		Sheet of	
File: D:\接案資料\..\NAU7802SGI.SchDoc		Drawn By:	

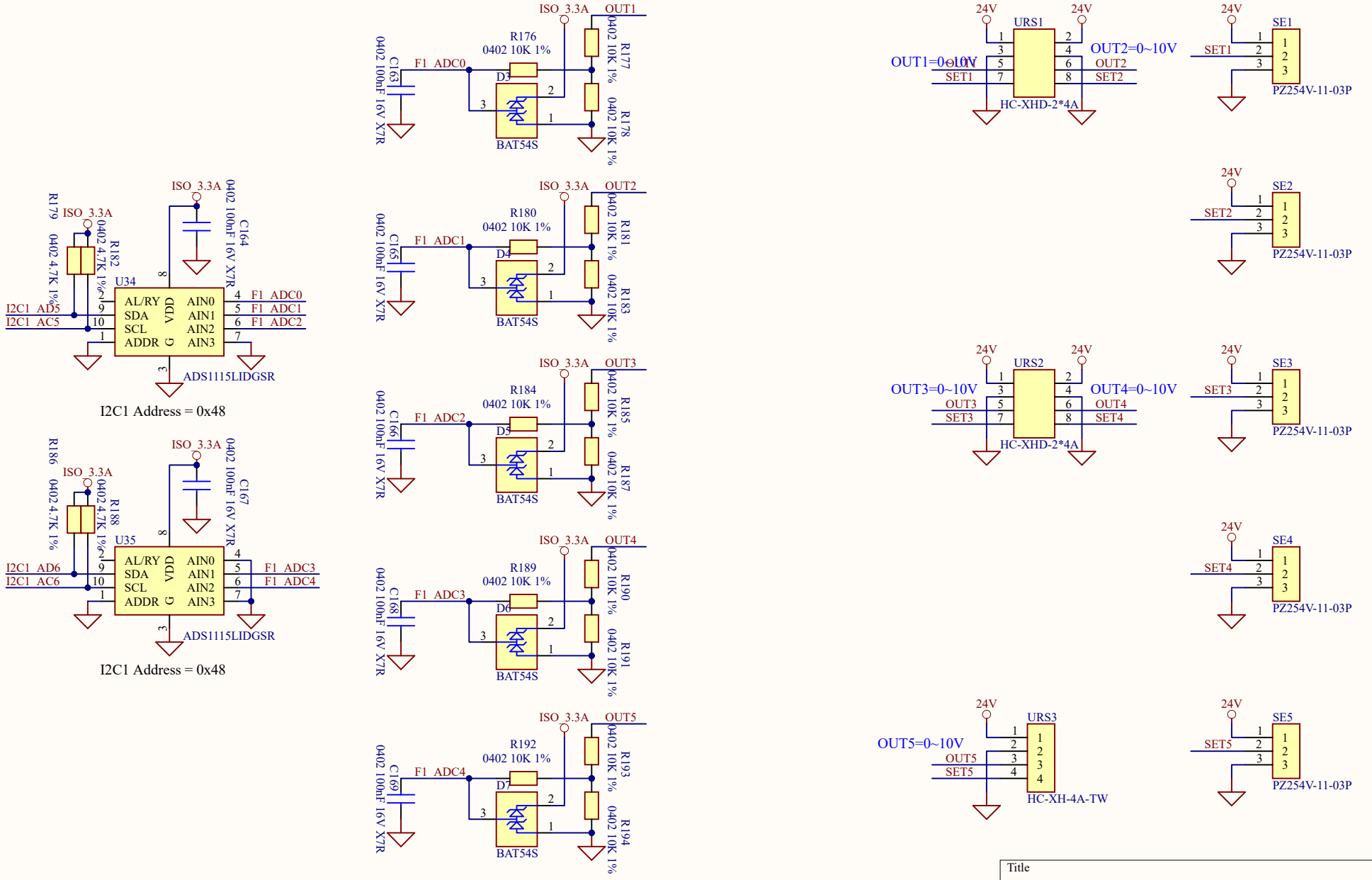

Title		
Size A4	Number ADS1115	Revision
Date: 4/01/2026		Sheet of
File: D:\接案資料\..\ADS1115_A.SchDoc		Drawn By:

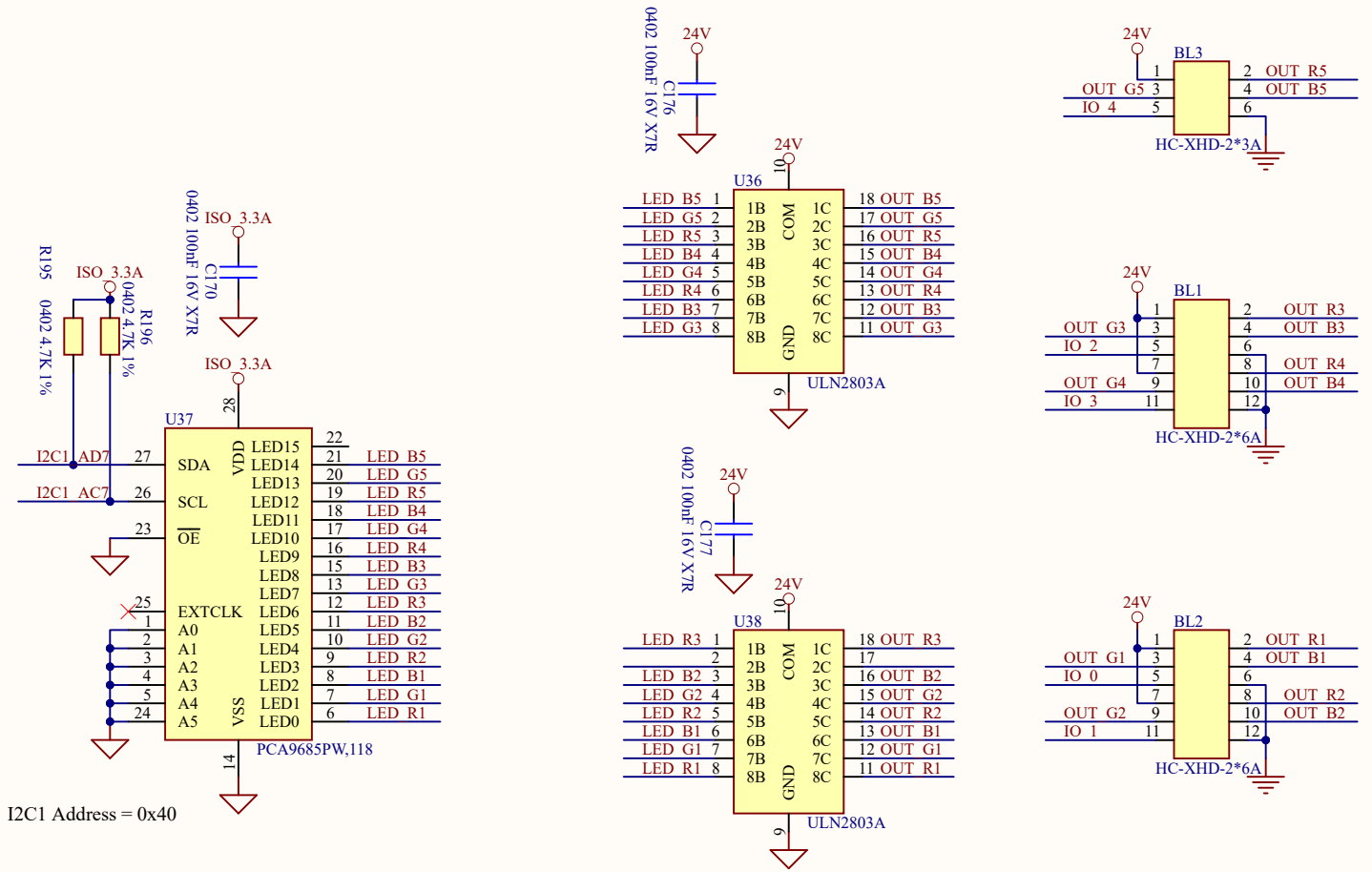

Title		
Size A4	Number TPL7407	Revision
Date: 4/01/2026		Sheet of
File: D:\接案資料\..\PCA9685_A.SchDoc		Drawn By:

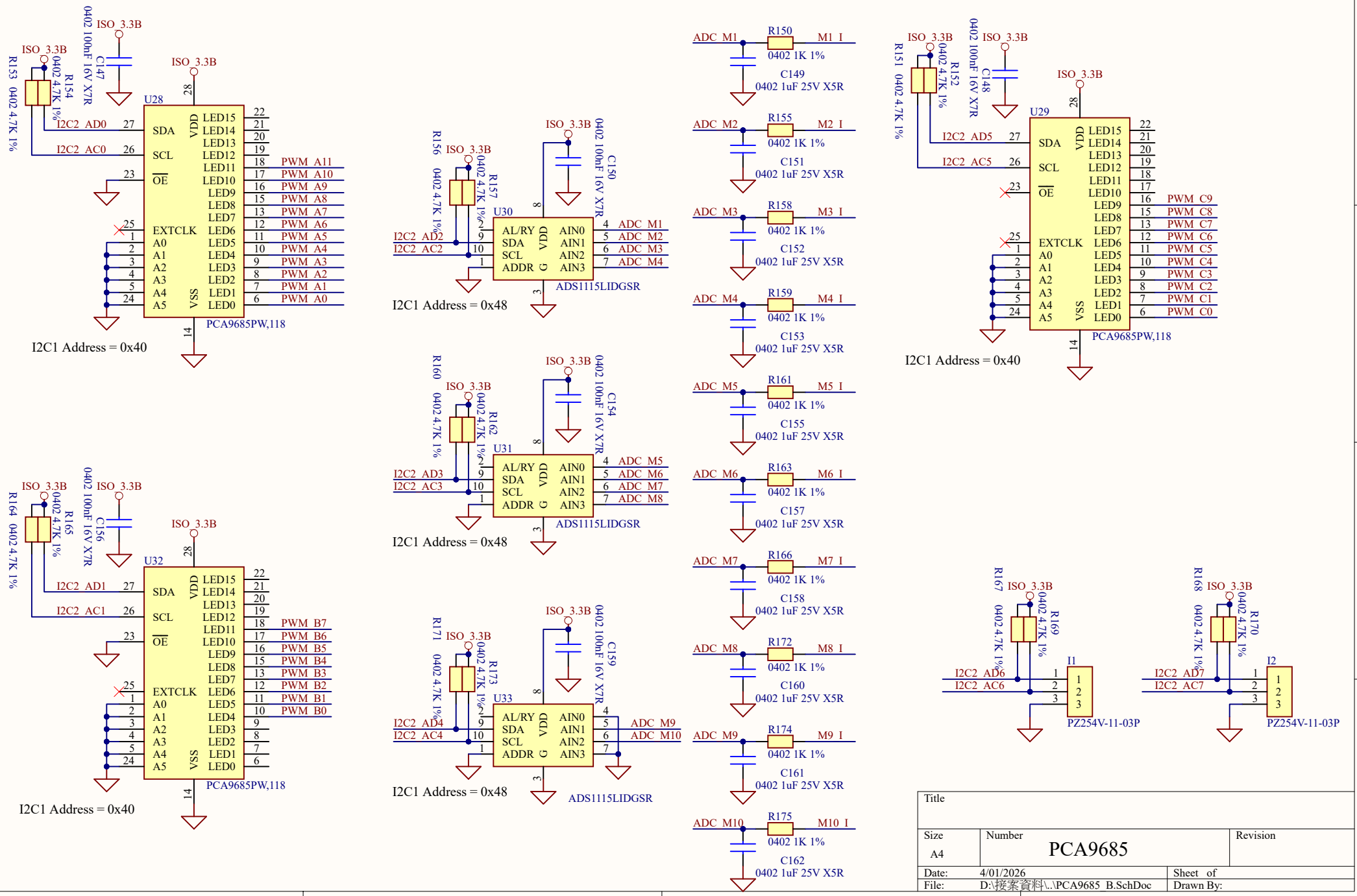
U28
PCA9685PW,118
I2C1 Address = 0x40
U29
PCA9685PW,118
I2C1 Address = 0x40
U30
ADS1115LIDGSR
I2C1 Address = 0x48
U31
ADS1115LIDGSR
I2C1 Address = 0x48
U32
PCA9685PW,118
I2C1 Address = 0x40
U33
ADS1115LIDGSR
I2C1 Address = 0x48
ISO_3.3B
I2C2_AD0
I2C2_AC0
I2C2_AD5
I2C2_AC5
I2C2_AD2
I2C2_AC2
I2C2_AD3
I2C2_AC3
I2C2_AD1
I2C2_AC1
I2C2_AD4
I2C2_AC4
I2C2_AD6
I2C2_AC6
I2C2_AD7
I2C2_AC7
ADC_M1
ADC_M2
ADC_M3
ADC_M4
ADC_M5
ADC_M6
ADC_M7
ADC_M8
ADC_M9
ADC_M10
M1_I
M2_I
M3_I
M4_I
M5_I
M6_I
M7_I
M8_I
M9_I
M10_I
PWM_A11
PWM_A10
PWM_A9
PWM_A8
PWM_A7
PWM_A6
PWM_A5
PWM_A4
PWM_A3
PWM_A2
PWM_A1
PWM_A0
PWM_C9
PWM_C8
PWM_C7
PWM_C6
PWM_C5
PWM_C4
PWM_C3
PWM_C2
PWM_C1
PWM_C0
PWM_B7
PWM_B6
PWM_B5
PWM_B4
PWM_B3
PWM_B2
PWM_B1
PWM_B0
PZ254V-11-03P
Title
Size
A4
Number
PCA9685
Revision
Date: 4/01/2026
Sheet of
File: D:\接案資料\..\PCA9685_B.SchDoc
Drawn By:

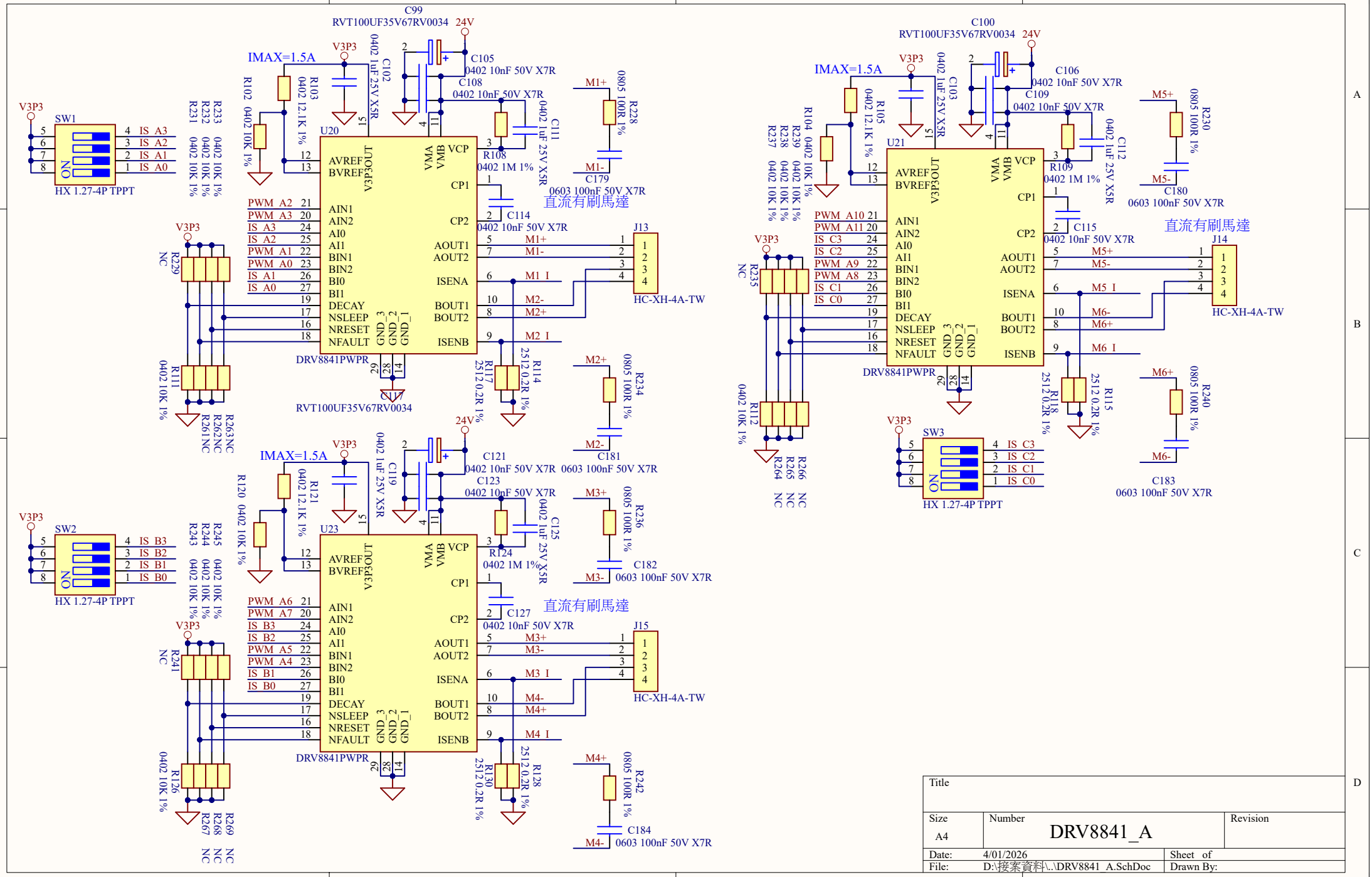

Title		
Size A4	Number DRV8841_A	Revision
Date: 4/01/2026		Sheet of
File: D:\接案資料\..\DRV8841_A.SchDoc		Drawn By:

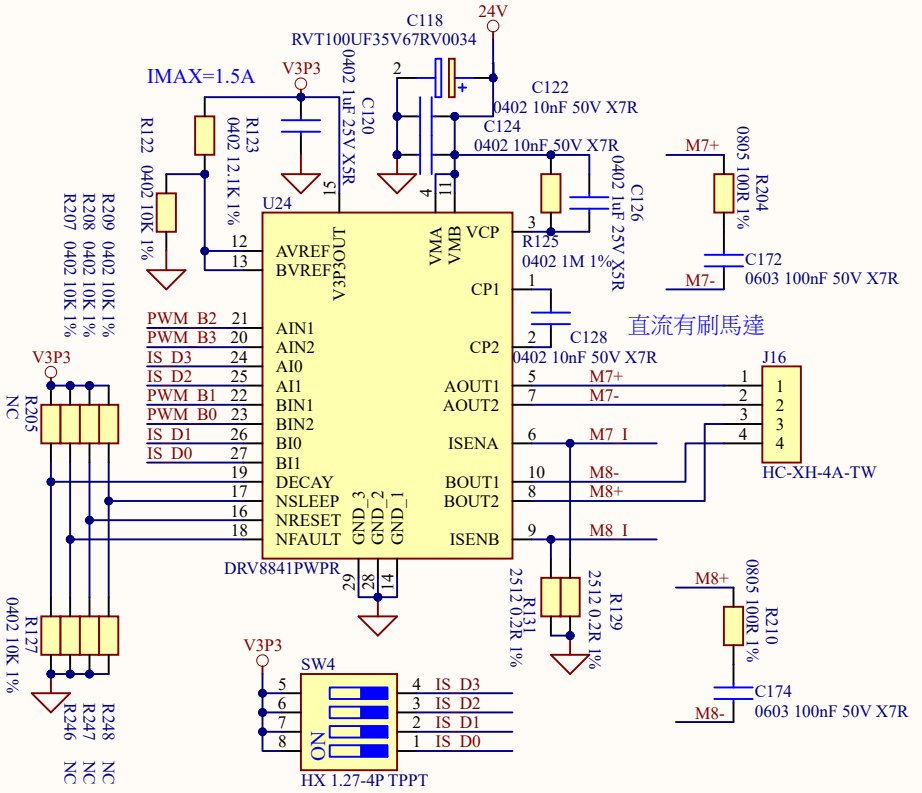

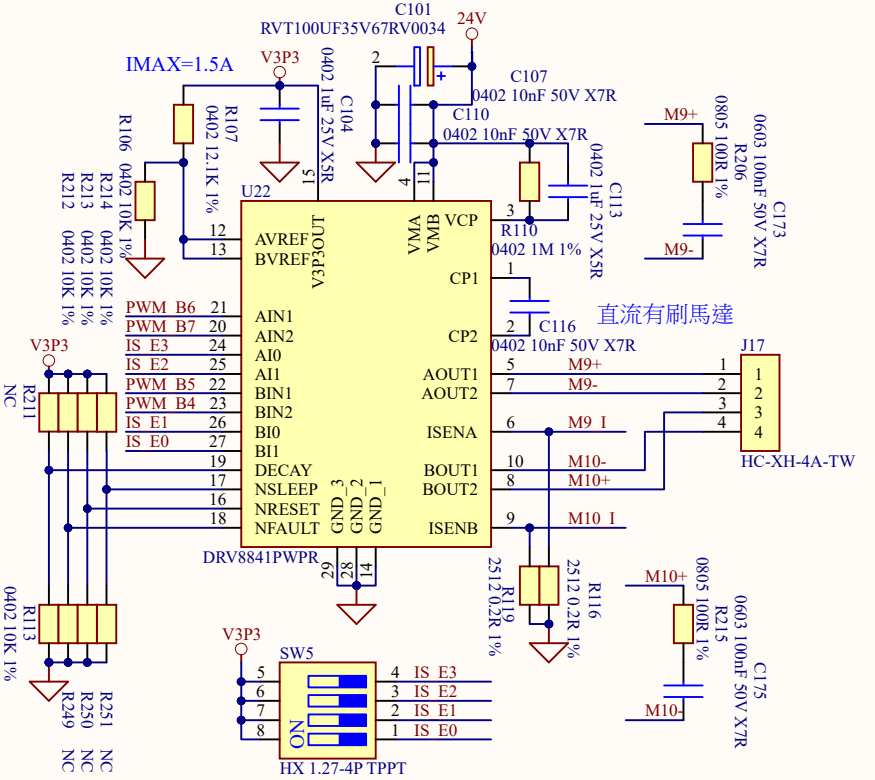

Title		
Size A4	Number DRV8841_B	Revision
Date: 4/01/2026		Sheet of
File: D:\接案資料\..\DRV8841_B.SchDoc		Drawn By:

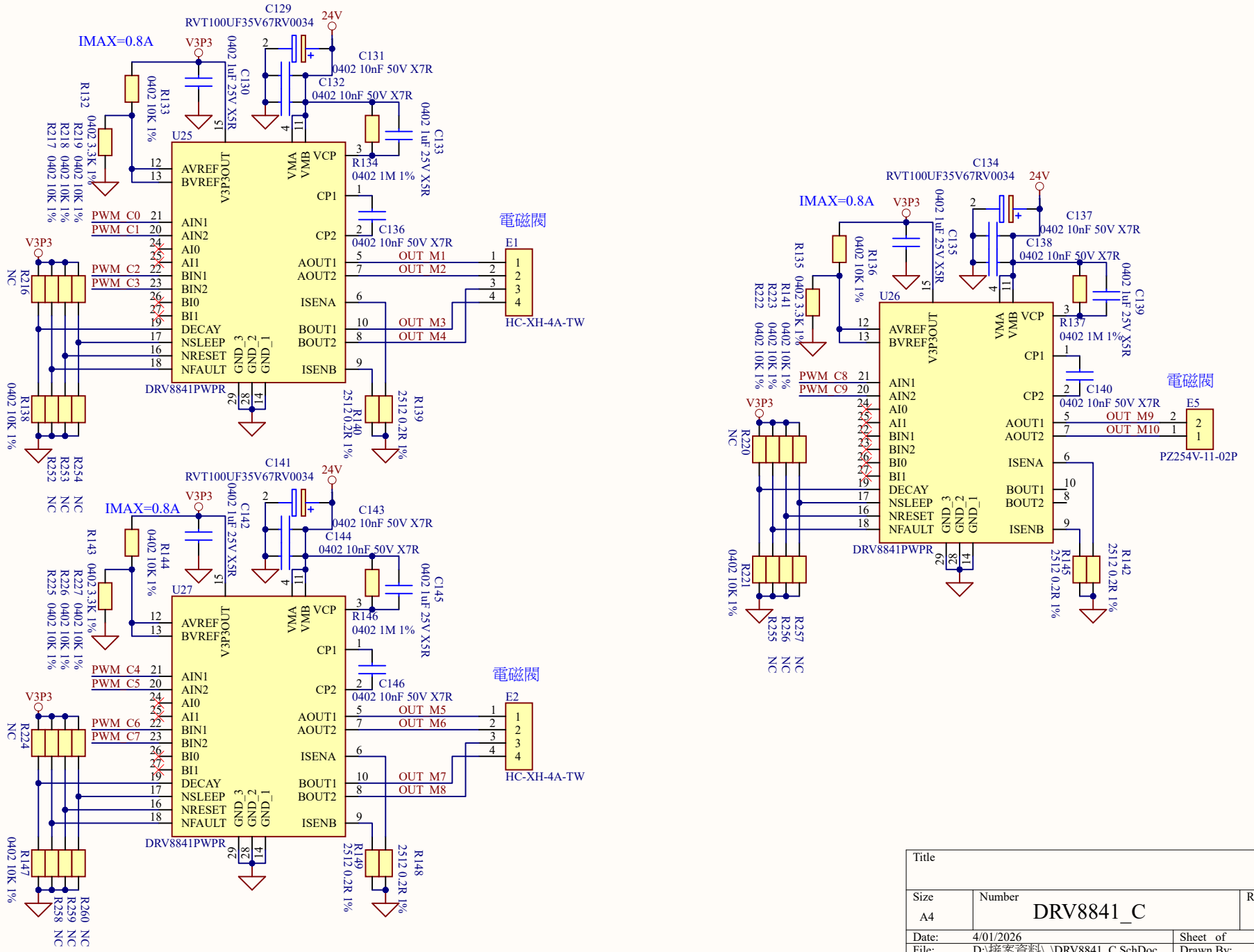

Title		
Size A4	Number DRV8841_C	Revision
Date: 4/01/2026		Sheet of
File: D:\接案資料\..\DRV8841_C.SchDoc		Drawn By:

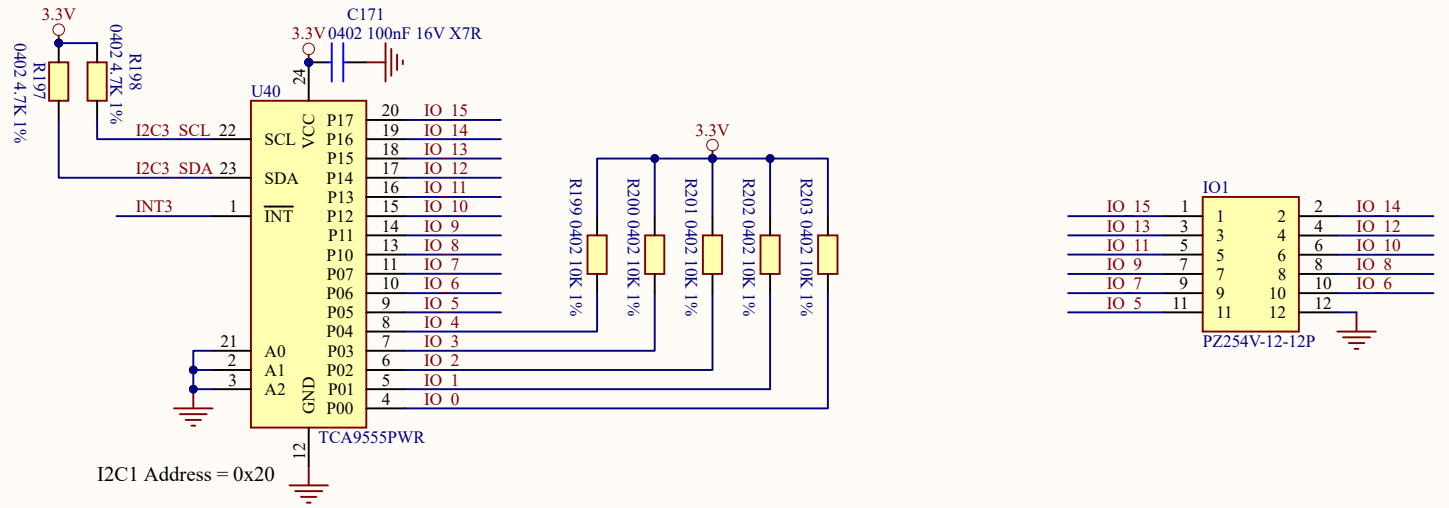

Title		
Size A4	Number TCA9555	Revision
Date: 4/01/2026		Sheet of
File: D:\接案資料\..\TCA9555.SchDoc		Drawn By: