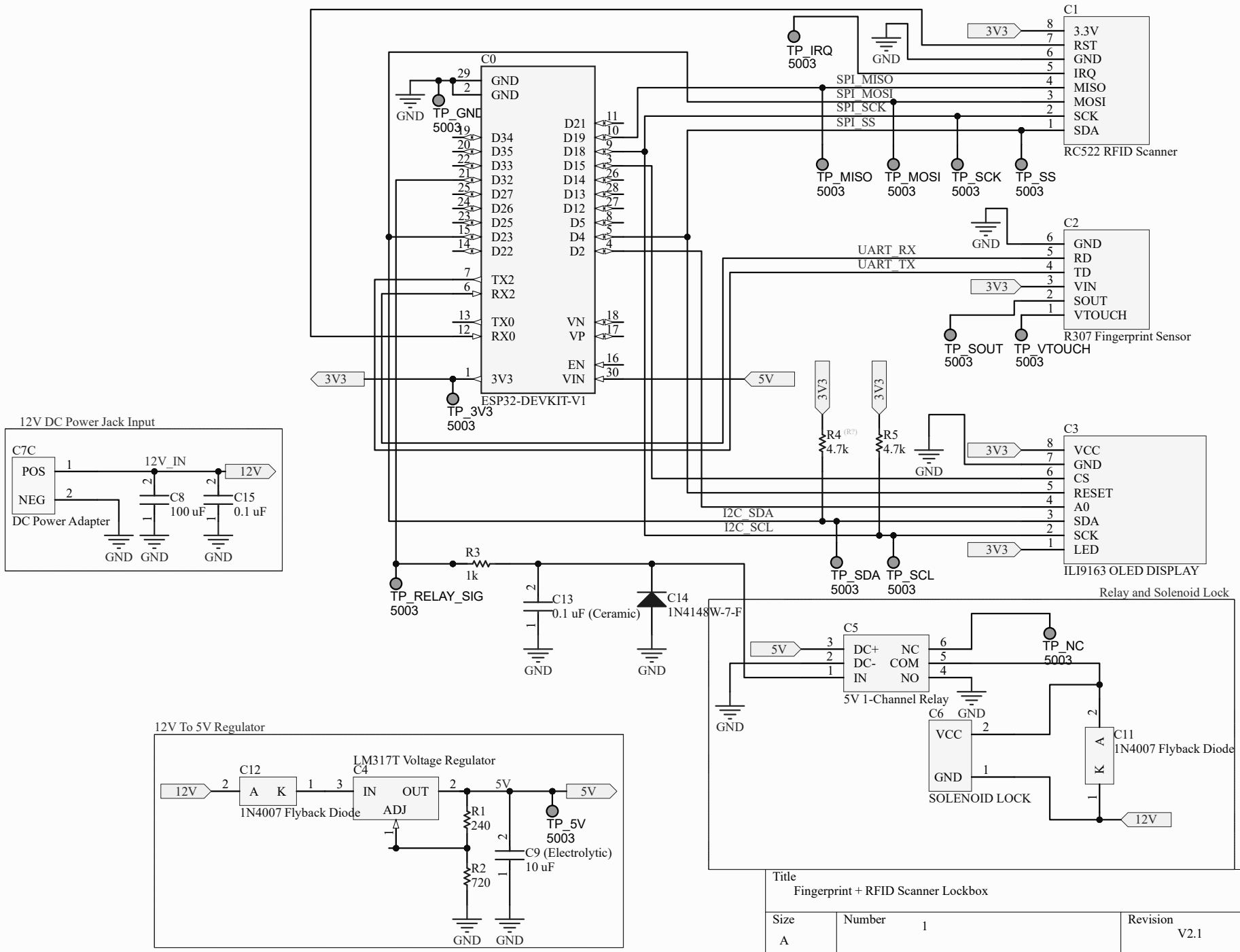
C0
ESP32-DEVKIT-V1
GND
GND
D34
D35
D33
D32
D27
D26
D25
D23
D22
TX2
RX2
TX0
RX0
3V3
D21
D19
D18
D15
D14
D13
D12
D5
D4
D2
VN
VP
EN
VIN
TP_GND 5003
TP_3V3 5003
TP_IRQ 5003
C1
RC522 RFID Scanner
3.3V
RST
GND
IRQ
MISO
MOSI
SCK
SDA
SPI_MISO
SPI_MOSI
SPI_SCK
SPI_SS
TP_MISO 5003
TP_MOSI 5003
TP_SCK 5003
TP_SS 5003
C2
R307 Fingerprint Sensor
GND
RD
TD
VIN
SOUT
VTOUCH
UART_RX
UART_TX
TP_SOUT 5003
TP_VTOUCH 5003
C3
ILI9163 OLED DISPLAY
VCC
GND
CS
RESET
A0
SDA
SCK
LED
I2C_SDA
I2C_SCL
TP_SDA 5003
TP_SCL 5003
R4 4.7k
R5 4.7k
12V DC Power Jack Input
C7C
POS
NEG
DC Power Adapter
12V_IN
12V
C8 100 uF
C15 0.1 uF
R3 1k
TP_RELAY_SIG 5003
C13 0.1 uF (Ceramic)
C14 1N4148W-7-F
5V
Relay and Solenoid Lock
C5
DC+
DC-
IN
NC
COM
NO
5V 1-Channel Relay
TP_NC 5003
C6
VCC
GND
SOLENOID LOCK
C11 1N4007 Flyback Diode
12V To 5V Regulator
C12
A
K
1N4007 Flyback Diode
LM317T Voltage Regulator
C4
IN
OUT
ADJ
R1 240
R2 720
C9 (Electrolytic) 10 uF
TP_5V 5003
Title
Fingerprint + RFID Scanner Lockbox
Size
A
Number
1
Revision
V2.1
Date: 11/19/2024
Sheet 1 of 1
File: C:\Users\..\Lockbox_Schematic_V2.1.SchDoc
Drawn By: Felix Moss