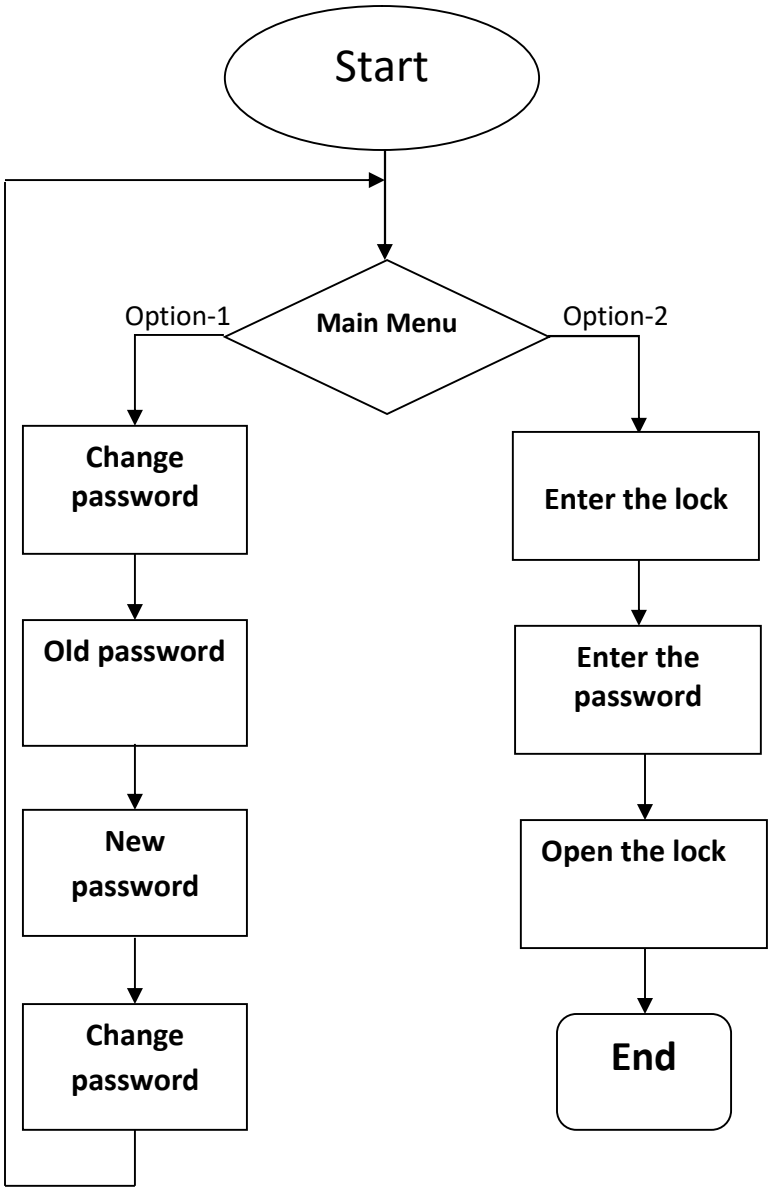
Start
Main Menu
Option-1
Option-2
Change password
Old password
New password
Change password
Enter the lock
Enter the password
Open the lock
End

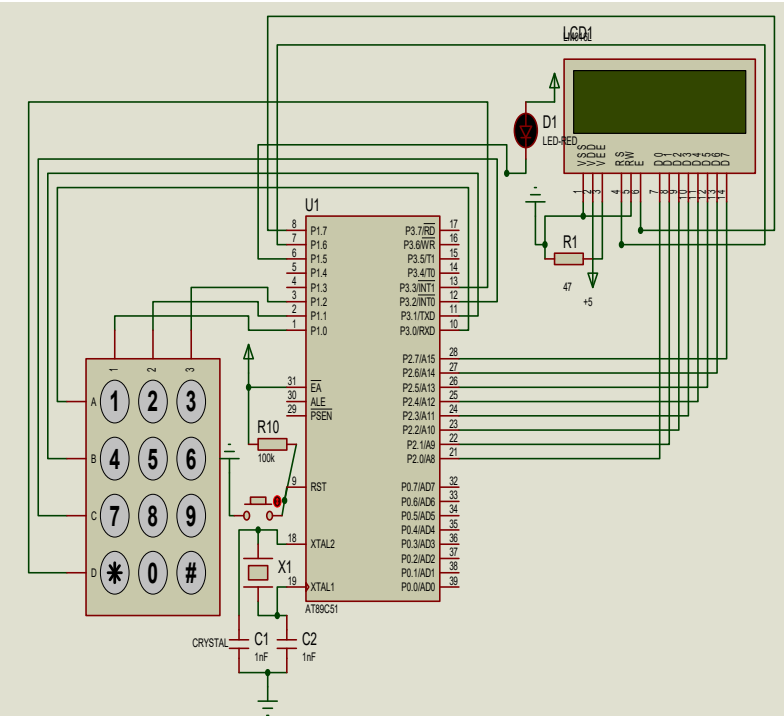
LCD1
D1
LED-RED
R1
47
+5
U1
AT89C51
R10
100k
X1
CRYSTAL
C1
1nF
C2
1nF