RADIO DIVISION
ISSUE: MARCH 2014

RAN OPTIMIZATION FOR SATELLITE NETWORK

GENERIC REQUIREMENTS
(No. TEC/TX/GR/RAN-001/01.MAR.2014)

ISSUE - 1

© TEC

DEPARTMENT OF TELECOMMUNICATIONS
GOVERNMENT OF INDIA
TELECOMMUNICATION ENGINEERING CENTRE
KHURSHID LAL BHAVAN, JANPATH
NEW DELHI 110001
INDIA

All Rights Reserved and no part of this publication may be reproduced, stored in a retrieval system, or transmitted, in any form or by any means, electronic, mechanical, photocopying, recording or otherwise without written permission from the Telecommunication Engineering Centre, New Delhi.

CONTENTS

Clause No.	Requirement	Page No.
	References	4
PART - 1	**TECHNICAL REQUIREMENTS**	
1.0	Scope	6
1.3	Equipment Application	6
2.0	Functional and Technical Requirements	10
2.1	Functional Requirements	10
2.2	Technical Requirements	11
2.4	Performance Requirements	14
2.5	Management and Maintenance requirements	14
2.6	Field Trail	15
PART-2	**GENERAL REQUIRMENTS**	
3.0	GENERAL REQUIRMENTS	17
3.1	Engineering Requirements	17
3.2	Operational Requirements	17
3.3	Quality Requirements	18
3.4	Environmental Requirements	18
3.5	Maintenance Requirements	18
3.6	Power Supply	19
3.7	Accessories	19
3.8	Documentation	20
3.9	Protection Requirements	20
3.10	Safety Requirements	20
3.11	Electromagnetic Compatibility (EMC)	21
	Annexure for the Purchaser	24
	Abbreviations	25

HISTORY SHEET

GR Title	GR No.	Remarks
RAN OPTIMIZATION FOR SATELLITE NETWORK	No. TEC/TX/GR/RAN-001/01.MAR.2014)	NEW GR

REFERENCES

All the standards are subject to revision. The versions/issues of the standards indicated in this GR, or their subsequent versions/editions shall be applicable.

QA DOCUMENTS

- QM 115 (1997) - Reliability Methods and Predictions
- QM 118 - Quality and Reliability in product Design
- QM 205 - Guidelines for Standard of Workmanship for Printed Boards
- QM 206 - Guidelines for Standard of Workmanship for Printed Board Assemblies
- QM 210 - Guidelines for Standard of Workmanship for Surface Mounted Devices
- QM 301 - Transmission Equipment General Documentation.
- QM 333 (1990) – Specification for environmental testing of electronic equipments for transmission and switching use, for operation, transportation and storage.

ITU RECOMMENDATIONS

-ITU-R G.703, G.704, G.706, G.732, G.733, G.823, G.824, ITU-T G.168,

OTHER STANDARDS

- ISO 9001:2000
- IS 8437 {1993}- Guide on the effects of current passing through the human body
- IS 13252 {2003}- Safety of information technology equipment including electrical business equipment
- IS 12063 (1987) - Classification of degree of protection provided by enclosures of the electrical equipment
- IS 10437 (1986) – Safety requirements of radio transmitting equipments.
- CISPR 22 {2003}- Limits and methods of measurement of radio disturbance characteristics of Information Technology Equipment.
- IEC 61000-4-2 {2001}- Testing and measurement techniques of Electrostatic discharge immunity test.
- IEC 61000-4-4 -{1995 with Amendment 1 (2000) and Amendment 2 (2001)} Testing and measurement techniques of electrical fast transients/burst immunity test.
- IEC 61000-4-3 -{2002} Radiated RF Electromagnetic Field Immunity test.
- IEC 61000-4-5 - {2001} Test & Measurement techniques for Surge immunity tests.
- IEC 61000-4-6 -{2001} Immunity to conducted disturbances, induced by radio frequency fields.
- IESS 308 Rev.11, 310 Rev.3
- IEEE 802.1, 802.3, 802.3u, 802.3z

PART - 1

TECHNICAL REQUIREMENTS

1.0 SCOPE

1.1 This document provides the generic characteristics of RAN (Radio Access Network) optimization equipment which is to be used to aggregate and optimize legacy Time Division Multiplex, CDMA and GSM Radio Base Station traffic at the Abis E1 RAN interface. The aggregated and optimized traffic shall interface both TDM (E1 or fractional E1) and IP/Ethernet (Layer 2 Ethernet only or Layer 3 IP/Ethernet) type of transmission network, or the combination of both. The equipment shall not interfere with the ACM (Adaptive Code Modulation) mode of operation of the modem used in the network. In addition, the equipment should be configurable as per requirement, to aggregate and optimize, in the future 3G IP and 4G IP Base Stations' traffic (respectively IuboIP and S1 RAN interface traffic).

1.2 The operation of the equipment should be to remove all unnecessary information from non-IP (TDM) RAN interface traffic, and convert the entire traffic to IP, where statistical multiplexing should occur with the IP-RAN traffic (3G, 4G), while ensuring that the QoS (Quality of Service) of the services offered by the network operator is not affected.

1.3 Equipment Application

1.3.1 Point to point and point to multipoint (STAR) network topology should be supported by the equipment. In case of STAR network topology, the RAN optimization equipment installed at the hub shall be able to support higher order TDM STM-1 channelized VC12 granularity to connect to the BSC, in addition to E1 interfaces, as well as both GE electrical/optical interfaces (towards 3G Radio Network Controller(RNC) and 4G Packet Data Network Gateway(PGW)).

1.3.2 Typical implementation for Point to Multi point scenario is depicted in the figure -1:

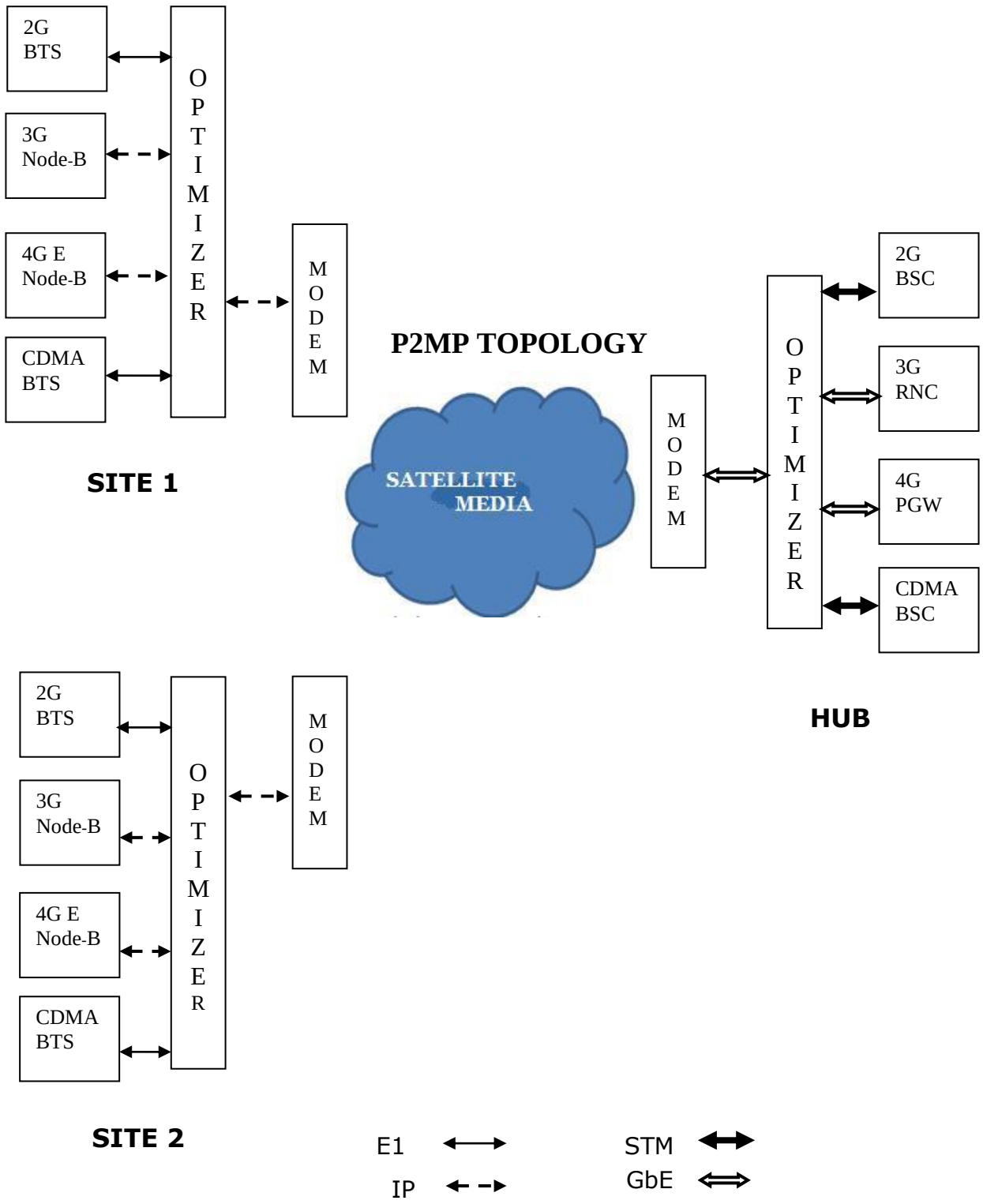

Figure-1

1.3.3 Typical implementation for Point to Point scenario is depicted in the figure -2:

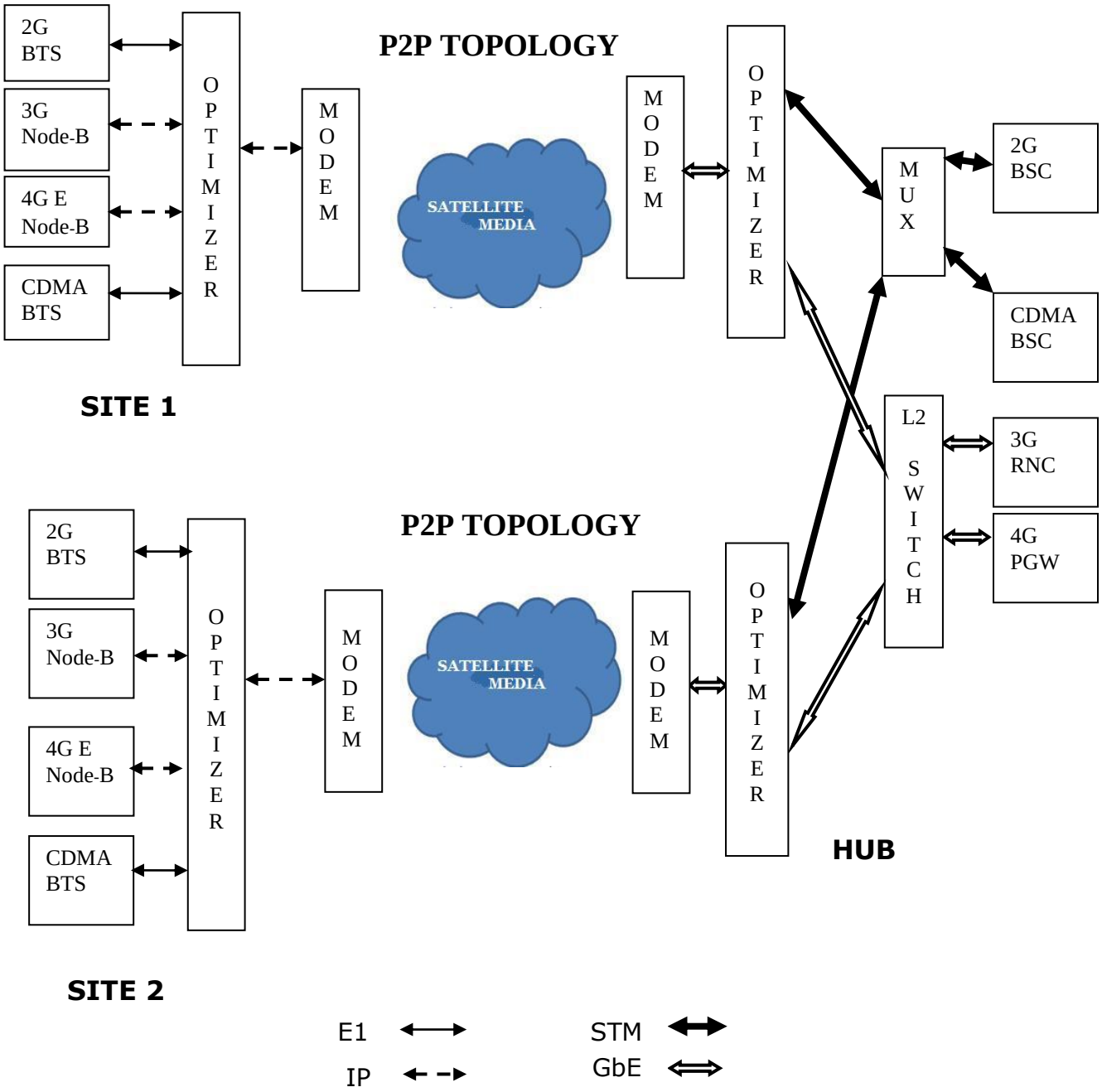

Figure-2

1.3.4 The functional diagram of the equipment and overall reference network design (STAR topology) is depicted in the figure-3:

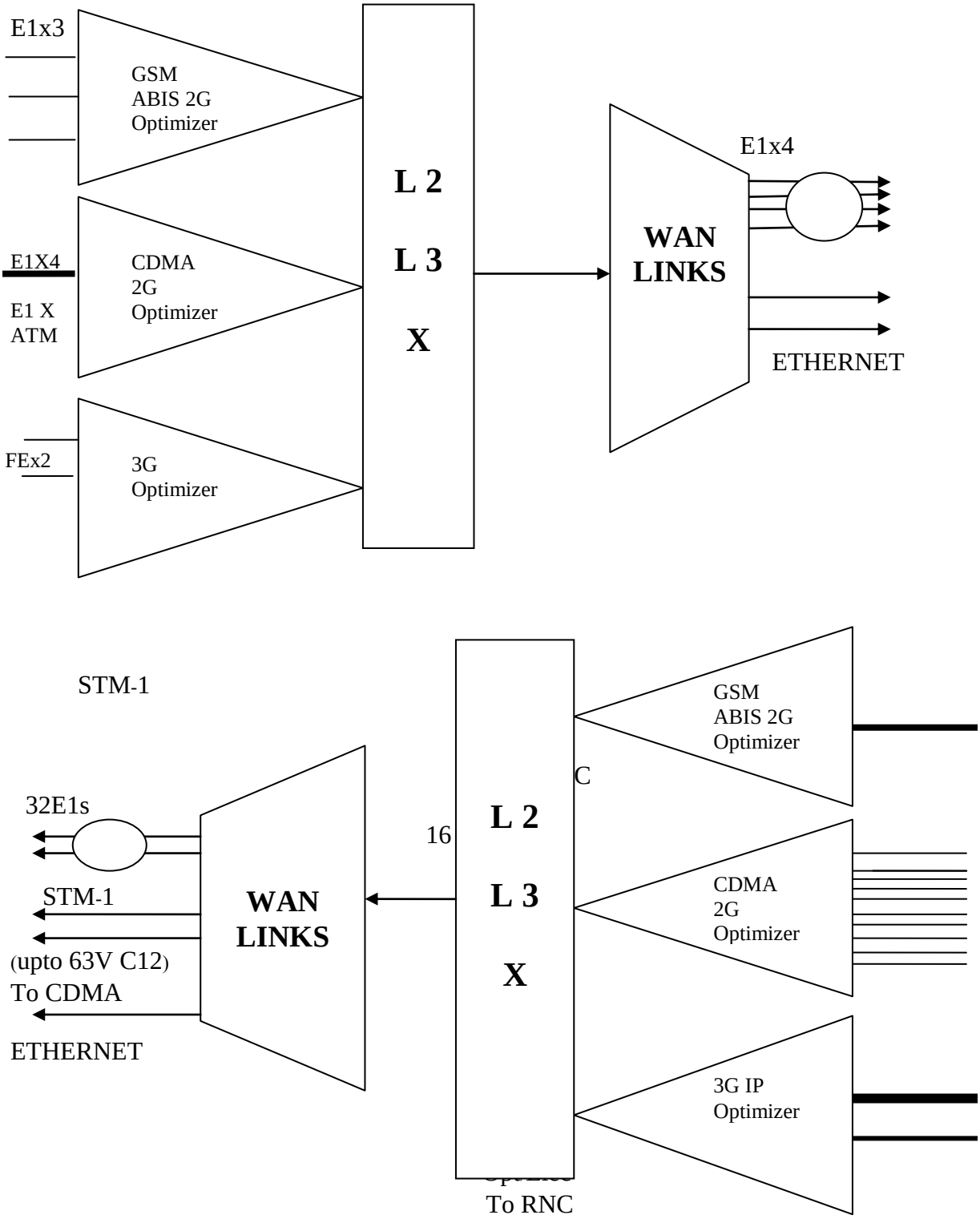

Figure-3

1.3.5 The equipment shall be compatible and work in tandem with other radio equipments in the network and shall not require any specific configuration settings to be manually entered other than the type of radio interface (E1, IP/Ethernet) and the nature of the service (CDMA, GSM 2G, UMTS 3G, LTE).

1.3.6 Additionally, the equipment shall also be able to set priorities between the different services (for example 2G vs. 3G) and manage temporarybandwidth congestion on the transport media (i.e. bandwidth overbooking) without loss of connectivity to the remote radio base stations.

2.0 FUNCTIONAL AND TECHNICAL REQUIREMENTS

2.1 FUNCTIONAL REQUIREMENTS:

2.1.1 The equipment should act as a convergence node for CDMA and GSM 2G, 3G, 4G traffic over a common transmission backhaul network

2.1.2 The equipment shall be able to optimize and convert GSM 2G and CDMA Abis E1 TDM RAN interface in to native IP/Ethernet traffic, as a dynamic variable IP traffic proportional to the number of Erlangs (or active voice/data channels) at any given time.

2.1.3 GSM 2G Abis optimization performance: The optimization equipment shall provide GSM 2G Abis traffic optimization with a minimum optimization factor of 30% measured on the GSM Abis traffic payload..

2.1.4 The optimized TDM traffic when statistically mixed with IP traffic of 3G/4G will provide an additional optimization of 30% due to further aggregation.

2.1.5 The RAN optimization equipment shall be RAN equipment manufacturer agnostic, and shall not require any specific configuration settings to be manually entered to operate with a particular radio vendor equipment, other than the type of radio interface (E1, IP/Ethernet) and the nature of the service (CDMA, GSM 2G, GSM 3G, LTE). It shall also be transparent to any RAN switch vendor software release upgrades.

2.1.6 From a functional point of view, the equipment shall not affect voice quality, data services or Key Performance Indexes (KPIs) in any manner. The optimization equipment shall operate in a totally transparent manner at the transmission level (Layer 1/Layer 2) with respect to the 2G GSM or CDMA, 3G or 4G RAN network and services.

2.1.7 The equipment interfaces shall be able to accommodate concurrently and simultaneously Ethernet (Layer 2) switched packet network, or IP/Ethernet (Layer 3) switched packet network connected over Ethernet interface, and one

or more TDM E1 interfaces. The E1 transmission interfaces could be unchannelized or fractional. .

2.1.8 It shall support both types of transmission media satellite and terrestrial microwave radio.

2.1.9 The equipment shall be able to support and operate with ACM [Adaptive Code Modulation] modem (satellite or microwave radio) mode of operation, and dynamically shape the output Wide Area Network (WAN)traffic to the available transmission bandwidth capacity at any given time.

2.1.10 The equipment shall be able to accommodate both point to point and point to multipoint [STAR] network topology.

2.1.11 The equipment shall support minimum standard electrical Ethernet interfaces as per IEEE 802.3/IEEE 802.3u/IEEE 802.3z.With the option to add concurrently optical GE interface for the equipment located at the hub location (STAR topology).

2.1.12 The Equipment shall support E1 interfaces, with the option to add STM-1 channelized interface with VC-12 channel granularity, for the equipment located at the hub location (STAR topology). Both STM-1 and E1 interfaces shall be supported on the same equipment concurrently.

2.1.13 The equipment shall provide loop-back facility at E1 interface for testing purposes and shall be able to extract clock source from different sources like E1, VC-12, external GPS and STM-1.

2.1.14 The equipment shall support the ability to transmit simultaneously the ingress traffic on both E1 TDM and Ethernet WAN transmission interfaces, constructed as one single virtual transmission channel.

2.1.15 The equipment shall be able to identify and protect signaling traffic between the BSC/RNC and the BTS/NodeB, without modification to it, and shall always maintain connectivity between the RNC/BSC and BTS/NodeB. In case of congestion, GSM voice 2G traffic shall be given priority over data and 3G or CDMA traffic.

2.2 TECHNICAL REQUIREMENTS:

2.2.1 RAN optimizer equipment shall comply with ITU-R Recommendation G.703, G.704, G.706, G.732, G.733, G.823, G.824, G.168, shall

2.2.2 The equipment shall have a built in Layer 2 Ethernet Switch and support 802.1Q(VLAN) traffic.

2.2.3 The equipment shall support port based VLANs.

2.2.4 The equipment shall support Ethernet and VLAN transparent bridging across the transmission network.

2.2.5 The equipment shall support a minimum of 4 queues on the transmission network interface, by order of priority:

- 2G, 3G, 4G signaling traffic.
- 2G GSM voice traffic;
- 3G, 4G and data services traffic'
- Other ancillary Operation and Maintenance (OAM) traffic.

2.2.6 The equipment shall provide automatic mapping and detection of the TDM Abis interface configuration (GSM 2G, CDMA)

2.2.7 The equipment shall support any GSM and CDMA voice codecs e.g.EVRC (CDMA), FR, EFR, HR, AMR all rates and any types of Abis interface signaling configuration. The detection mechanism shall be automatic.

2.2.8 The TDM interface traffic sampling time for GSM 2G Abis TDM interface shall be configurable to optimize the optimization efficiency vs the processing delay depending of the media transmission (satellite or microwave radio).

2.2.9 The optimization equipment end-to-end intrinsic processing latency measured as first bit in / first bit out when the two equipment are connected back to back, shall be less than 10ms for terrestrial microwave radio links and 25ms for satellite links.

2.2.10 The optimization equipment shall come in different models and be scalable in terms of processing capacity and number & type of interfaces (E1, Ethernet, STM-1) in order to match the different sites requirements (remote sites, STAR hub sites).

2.2.11 The equipment shall support the following interfaces for remote stations:

2.048 Mbps	:	ITU-T Recommendation G.703120 ohms symmetric pair
STM-1	:	Channelized STM-1 with optical interface
Fast Ethernet	:	100 Base-T with twisted pair copper (Auto sense)
Gigabit Ethernet	:	IEEE 802.3z

2.2.12 STAR topology hub site equipment shall be able to manage at least 16 remote

sites in a single chassis (one system). The equipment shall support at least the following interfaces :

- 48 E1s interfaces:
- 2 x STM-1 interfaces channelized VC12 (2+2 with APS 1+1 protection):
- 2 GE Optical interfaces:
- 4 GE Electrical interfaces.

2.2.13 The offered A.bis optimizer unit shall be of rack mounting type. It shall be rack mountable in standard telco grade 19" rack.

2.2.14 The equipment shall be capable of (1+1) redundancy, as an option.System redundancy shall imply also interface redundancy / port protection:

- E1 interface port protection, using a passive switchover mechanism (Y cable or patch panel)
- Ethernet port protection (port switching / traffic re-routing).

Note: The type approval shall be given after testing (1+1) configuration only.

2.2.15 The STM-1 interface shall come with standard SFP pluggable modules, offering a choice of electrical, multimode, short-haul and long-haul single mode optical interfaces. The STM-1 ports shall come with APS 1+1 port protection.

2.2.16 **Synchronization**:
2.048 Mbps/2 MHz digital signal in both directions of transmissions shall be derived in one of the following ways:

a) From an E1 connected to tributary interface which is carrying traffic as well.
b) From an incoming clock received from the STM-1 stream (if available).
c) From an incoming clock received from one of the VC-12s derived from the STM-1 stream (if available)
d) From an external CLK IN port using 2048 Kbps clock which is G.703 compliant.
e) From GPS clock module. The equipment shall have GPS antenna port on the front or back panel for connecting external GPS antenna.
f) The equipment shall have a stable stratum 3 compliant TCXO with 250 ppb accuracy with 24 Hr holdover range, as a backup clock source tyo provide clocking continuity to the GSM BTS. (2G).

The equipment shall have user defined synchronization source priority

selection feature.

2.2.18 Line interface shall support ITU-T Rec. G.703/G.704 interface. The G.703.

2.2.17 The RAN optimizer shall be provided with RJ-45 connectors for all types of electrical Ethernet interfaces and SC type for Gigabit interfaces if available.

2.2.19 Physical Interface shall be provided with 120 ohms balanced. The nominal bit rate shall be 2048 kbits with bit rate accuracy: ±50 ppm (±102.4 bit/s) as per Clause 9 of ITU-T Rec. G.703.

2.2.20 The equipment shall support AIS relay on E1 and VC12 channel interfaces, as well as AIS relay between E1 and VC12. Channel.

2.2.21 The equipment shall be able toextract clock source from different sources like E1, VC-12, external GPS and STM-1. The clock accuracy shallbe compliant with Mobile wireless 3GPP standards for 2G GSM services.

2.3 LED Indicators:

Power ON/OFF : Signals all voltages present

Online : Signifies active unit for redundant operation

Activity/Active indication LED : For STM-1 and all Ethernet ports.

2.4 Performance Requirement:

2.4.1 E1 Interface:

2.4.1.1 Line interface shall support ITU-T Rec. G.703/G.704 interfaces. The G.703 physical Interface shall be provided with 120 ohms balanced. The nominal bit rate shall be 2048 kbits with bit rate accuracy: ±50 ppm (±102.4 bit/s) as per Clause 9 of ITU-T Rec. G.703.

2.4.1.2 The line coding shall be High Density Bipolar of order 3 (HDB3) as per'Annex A' of ITU-T Rec. G.703.

2.4.1.3 The line framing shall be as per ITU-T Rec. G.703 (unframed).

2.4.1.4 The jitter performance shall be as per ITU-T Rec. G.823.

2.4.1.5 The equipment shall support AIS relay on E1 and VC12 channel.

2.5 Management and Maintenance Requirements:

2.5.1 The equipment shall support centralized NMS. The purchaser may indicate the need for NMS.

2.5.2 The NMS will offer the functionalities of network configuration, supervision, alarm management and performance management. Theseare the minimum requirements to be supported by NMS.

2.5.3 The Equipment shall offer a Web based GUI interface for the equipment configuration and management. Alternatively, a CLI interface with the ability to produce configuration automated command script file shall also be provided.

2.5.4 The RAN optimizer shall offer a standard SNMP interface (SNMPv2) for propagating alarms and network performance & monitoring data to a 3rd party network supervision system; The MIBs corresponding to the objects exposed shall be made available.

2.5.5 The equipment shall have a centralized NMS offering. At minimum the functionalities of network configuration, supervision, alarm management, and performance management.

2.5.6 The NMS shall support detailed traffic statistics collection and analysis, and display in real time the optimization ratio, as well as bandwidth level occupancy on the transmission links, with appropriate alarms when thresholds are met, or when the WAN network link is experiencing congestion.

2.5.7 The NMS shall store the network information (alarms, performance monitoring) in an object database using a market standard object database format.

2.5.8 It shall be possible to export the network performance information in a standard business processing tool format (CSV for example):

2.5.9 The NMS shall display performance monitoring data per node on daily, weekly and monthly basis.

2.5.10 All management traffic shall be carried inband within the link (bearers) connecting the equipment systems;

2.5.11 All NMS and configuration activities / actions (NMS, CLI, Web) shall be performed remotely.

2.6 Field Trail : Four weeks

.

PART- 2

GENERAL REQUIREMENTS

3.0 GENERAL REQUIREMENTS:

3.1 ENGINEERING REQUIREMENTS:

3.1.1 The equipment shall be fully solid state and adopt state of the art technology.

3.1.2 The equipment shall be 1U in size and light weight. The actual dimensions and weight of the equipment shall be furnished by the manufacturers.

3.1.3 All connectors shall be reliable, low loss and standard type so as to ensure failure free operations over long operations.

3.1.4 The equipment shall preferably work on natural cooling. However, the use of in-built DC operated fans is permitted in some equipment. An alarm may be extended to indicate failure of fan/fans. MTBF of each fan shall be more than 50,000 hours

3.1.5 Each sub-assembly shall be clearly marked with schematic reference to show its function, so that it is identifiable from the layout diagram in the handbook.

3.1.6 The equipment shall be housed in standard 19" (600 mm) rack or slim rack with a maximum height of 2250 mm and with front access. For outdoor equipment (or part of equipment), construction practice shall be followed as specified.

3.1.7 The supervisory indications and other control switches shall be provided at convenient locations on the bay preferably at a height around 1500 mm for ease of maintenance.

3.1.8 The plug-in units shall be hot swappable to allow their removal/insertion while the equipment is in energized condition.

3.1.9 The mechanical design and construction of each/unit shall be inherently robust and rigid under all conditions of operation, adjustment, replacement, storage and transport and conforming TEC QA standards QM-333 {Issue- March, 2010} "Standard for Environmental testing of Telecommunication Equipments"".

3.1.10 Each terminal block and individual tags shall be numbered suitably with clear identifying code and shall correspond to the associated wiring drawings.

3.1.11 Important Do's and Don'ts about the operation of the equipment shall be clearly indicated at a convenient place on the equipment.

3.2 OPERATIONAL REQUIREMENTS

3.2.1 The manufacturer shall guarantee the satisfactory performance of the equipment without any degradation in performance up to at an altitude upto 3,600 meters.

3.2.2 The equipment shall be able to work without any degradation in performance in saline atmosphere near coastal areas and shall be protected against corrosion.

3.2.3 Visual indication to show power ON/OFF status shall be provided.

3.2.4 Suitable visual indications shall be provided. (It is suggested that green colour for healthy and red colour for unhealthy conditions may be provided. Some other colour may be used for non urgent alarms).

3.2.5 The software/hardware in equipment shall not pose any problem due to changes in date and time caused by events such as changeover leap year etc. in the normal functioning of the equipment.

3.2.6 The equipment shall be provided with the proper dummy load connecting facilities, cooling arrangements, input/output, isolation /monitoring ports, as required.

3.3 QUALITY REQUIREMENTS

3.3.1 The manufacturer shall furnish the MTBF value. MTBF shall meet the values specified in GR. The calculations shall be based on the guidelines in either QA document no. QM-115 {1997} "Reliability Methods and Predictions" or any other international standard.

3.3.2 The equipment shall be manufactured in accordance with International quality management system ISO 9001:2000 for which the manufacturer shall be duly accredited. A quality plan describing the quality assurance system followed by the manufacturer would be required to be submitted.

And

The equipment shall be manufactured as per the latest QA Guidelines indicated in Quality Manuals QM 118 {Quality and Reliability in product Design}, QM 205 {Guidelines for Standard of Workmanship for Printed Boards}, QM 206 {Guidelines for Standard of Workmanship for Printed Board Assemblies}, QM 210 {Guidelines for Standard of Workmanship for Surface Mounted Devices} and QM 301 {Transmission Equipment General Documentation}.The supplier shall furnish a certification from the manufacturer to this effect, which shall be verified at the time of technical specifications evaluation.

3.4 ENVIRONMENTAL REQUIREMENTS FOR EQUIPMENT

3.2.1 The equipment shall conform to the requirements for Environment specified in TEC QA standards QM-333 {Issue- March, 2010} "Standard for Environmental testing of Telecommunication Equipments"" for operation, transportation and

storage. The applicable tests shall be for environmental category "B2" for indoor unit and category 'D' for outdoor unit, including vibration and corrosion (salt mist).

3.5 MAINTENANCE REQUIREMENTS

3.5.1 Maintenance philosophy is to replace faulty units/subsystems after quick on-line analysis through monitoring sockets, alarm indications and Built-in Test Equipment. The actual repair will be undertaken at centralized repair centers. The corrective measures at site shall involve replacement of faulty units/sub-systems.

3.5.2 The equipment shall have easy access for servicing and maintenance.

3.5.3 Suitable alarms shall be provided for identification of faults in the system and faulty units.

3.5.4 Suitable provision shall be made for extension of summary alarms.

3.5.5 Ratings and types of fuses used are to be indicated

3.6 POWER SUPPLY

3.6.1 The equipments shall be fed from the station power plant. The equipment shall meet the following requirements in respect of the power supply:-

3.6.2 Nominal power supply is -48Volts DC, with a variation over the range -44Volts to -57V. The equipment shall operate over this range without any degradation in performance.

3.6.3 The equipment shall be protected in case of voltage variation beyond the above specified range and also against input reverse polarity. The manufacturer shall furnish the value of guaranteed input voltage upto which no irreversible damage to the equipment will occur.

3.6.4 The actual power consumption shall be furnished by the manufacturer.

3.6.5 The derived DC voltages in the equipment shall have protection against over voltages, short circuit and overload.

3.6.6 The equipment shall have the option of operating from two independent sources of input power supply.

3.6.7 The equipment requiring AC mains shall operate from AC power supply without any degradation in the performance:

Nominal AC voltage for Single Phase shall be 230 V with variation of -15% to + 10%, at 0 ± 2 Hz.

3.7 ACCESSORIES

3.7.1 The supplier shall provide one complete set of:

a) All the necessary interfaces, connectors, connecting cables and accessories required for satisfactory and convenient operation of the equipment. Types of connectors, adopters to be used and the accessories of the approved quality shall be clearly indicated in the operating manuals which shall be in conformity with the detailed list in the GR.

b) Software and the arrangements to load the software at site.

3.7.2 Special tools, extender boards, extender cables and accessories essential for installation, operation and maintenance of the equipment shall be clearly indicated and supplied along with the equipment.

3.7.3 Special tools, extender boards, extender cables and accessories essential for repair of the equipment shall be clearly indicated and supplied in case the same are ordered.

3.8 DOCUMENTATION

3.8.1 TECHNICAL LITERATURE

Technical literature in English or Hindi with complete layout, detailed block schematic and circuit diagram of various assemblies with test voltages/waveforms at different test points of the units shall be provided. All aspects of installation, operation, maintenance and repair shall be covered in the manuals. The soft copy as well as hard copy of the manuals shall also be provided. The manuals shall include the following manuals.

3.8.2 INSTALLATION, OPERATION AND MAINTENANCE MANUAL

a. Safety measures to be observed in handling the equipment;
b. Precautions for installation, operation and maintenance;
c. Test jigs and fixtures required, and procedures for routine maintenance, preventive maintenance, troubleshooting and subassembly replacement;
d. Illustration of internal and external mechanical parts.
e. Detailed description about the operation of the software used in the equipment including its installation, loading, debugging, etc.

3.8.3 REPAIR MANUAL

a. List of replaceable parts used, including their sources and the approving authority;
b. Detailed ordering information for all the replaceable parts shall be listed in the manual to facilitate reordering of spares as and when required;
c. Procedure with flowchart for troubleshooting and subassembly replacement shall be provided. Test fixtures and accessories required for repair shall also be indicated. Systematic troubleshooting charts (fault-tree) shall be given for the probable faults with their remedial actions.

3.9 PROTECTION REQUIREMENTS

3.9.1 The equipment shall have a terminal for grounding the rack.

3.9.2 Protection against short circuit/open circuit in the accessible points shall be provided.

3.9.3 All switches/controls on front panel shall have suitable safeguards against accidental operation.

3.9.4 The equipment shall be adequately safeguarded to prevent entry of dust, insects and lizards.

3.10 SAFETY REQUIREMENTS

3.10.1 The operating personnel shall be protected against shock hazards as per IS 8437 {1993} "Guide on the effects of current passing through the human body" [equivalent to IEC publication 60479-1{1984}].

3.10.2 The equipment shall conform to IS 13252 {2003} "Safety of information technology equipment including electrical business equipment" [equivalent to IEC publication 60950 {2001}] and IS 10437 {1986} "Safety requirements of radio transmitting equipments" [equivalent to IEC publication 60215].

3.11 ELECTROMAGNETIC COMPATIBILITY (EMC)

a) **General Electromagnetic Compatibility (EMC) Requirements**: - The equipment shall conform to the EMC requirements as per the following standards and limits indicated therein. A test certificate and test report shall be furnished from an accredited test agency.

b) **Conducted and radiated emission(applicable to telecom equipment)**:

Name of EMC Standard: "CISPR 22 (2005) with amendment 1 (2005) & amendment 2 (2006) - Limits and methods of measurement of radio disturbance characteristics of Information Technology Equipment".

Limits:-

i) To comply with Class B of CISPR 22 (2005) with amendment 1 (2005) & amendment 2 (2006).

ii) The values of limits shall be as per TEC Standard No. TEC/EMI/TEL-001/01/FEB-09.

c) **Immunity to Electrostatic discharge**: **Name of EMC Standard**: IEC 61000-4-2 {2001) " Testing and measurement techniques of Electrostatic discharge immunity test".

Limits: -

i) Contact discharge level 2 {± 4 kV} or higher voltage;

ii) Air discharge level 3 {± 8 kV} or higher voltage;

d) **Immunity to radiated RF**:

Name of EMC Standard: IEC 61000-4-3 (2006) " Testing and measurement techniques-Radiated RF Electromagnetic Field Immunity test"

Limits:-

For Telecom Equipment and Telecom Terminal Equipment with Voice interface (s)

i) Under Test level 2 {Test field strength of 3 V/m} for general purposes in frequency range 80 MHz to 1000 MHz and

ii) Under test level 3 (10 V/m) for protection against digital radio telephones and other RF devices in frequency ranges 800 MHz to 960 MHz and 1.4 GHz to 6.0 GHz.

For Telecom Terminal Equipment without Voice interface (s)

Under Test level 2 {Test field strength of 3 V/m} for general purposes in frequency range 80 MHz to 1000 MHz and for protection against digital radio telephones and other RF devices in frequency ranges 800 MHz to 960 MHz and 1.4 GHz to 6.0 GHz.

e) **Immunity to fast transients (burst)**:

Name of EMC Standard: **IEC 61000- 4- 4 {2004) " Testing and measurement techniques of electrical fast transients/burst immunity test"**

Limits:-

Test Level 2 i.e. a) 1 kV for AC/DC power lines; b) 0. 5 kV for signal / control / data / telecom lines;

f) **Immunity to surges**:

Name of EMC Standard: IEC 61000-4-5 (2005) " Testing & Measurement techniques for Surge immunity test"

Limits:-

i) For mains power input ports : (a)1.0 kV peak open circuit voltage for line to ground coupling (b) 0.5 kV peak open circuit voltage for line to line coupling

ii) For telecom ports : (a) 0.5 kV peak open circuit voltage for line to ground (b) 0.5 KV peak open circuit voltage for line to line coupling.

g) **Immunity to conducted disturbance induced by Radio frequency fields**:
Name of EMC Standard: IEC 61000-4-6 (2003) with amendment 1 (2004) & amd. 2 (2006) "Testing & measurement techniques-Immunity to conducted disturbances induced by radio- frequency fields"
Limits:-

Under the test level 2 {3 V r.m.s.}in the frequency range 150 kHz-80 MHz for AC / DC lines and Signal /Control/telecom lines.

1. **Immunity to voltage dips & short interruptions (applicable to only ac mains power input ports, if any)**:
Name of EMC Standard: IEC 61000-4-11 (2004) "Testing & measurement techniques- voltage dips, short interruptions and voltage variations immunity tests"

Limits:-
i) a voltage dip corresponding to a reduction of the supply voltage of 30% for 500ms(i.e. 70 % supply voltage for 500 ms)
ii) a voltage dip corresponding to a reduction of the supply voltage of 60% for 200ms; (i.e. 40% supply voltage for 200ms) and
iii) a voltage interruption corresponding to a reduction of supply voltage of > 95% for 5s.

Note 1:- For checking compliance with the above EMC requirements, the method of measurements shall be in accordance with TEC Standard No. TEC/EMI/TEL-001/01/FEB-09 and the references mentioned therein unless otherwise specified specifically. Alternatively, corresponding relevant Euro Norms of the above IEC/CISPR standards are also acceptable subject to the condition that frequency range and test level are met as per above mentioned sub clauses (a) to (g) and TEC Standard No. TEC/EMI/TEL-001/01/FEB-09. The details of IEC/CISPR and their corresponding Euro Norms are as follows:

IEC/CISPR	**Euro Norm**
CISPR 11	EN 55011
CISPR 22	EN 55022
IEC 61000-4-2	EN 61000-4-2
IEC 61000-4-3	EN 61000-4-3
IEC 61000-4-4	EN 61000-4-4
IEC 61000-4-5	EN 61000-4-5
IEC 61000-4-6	EN 61000-4-6
IEC 61000-4-11	EN 61000-4-11

****

Annex for the reference of the purchaser

(To form part of the GR)

The clauses contained in this Annex are for the reference of the purchaser only and these clauses shall not be tested during Type Approval testing.

a. As and when software bugs are found/determined, the manufacturer shall provide patches/firmware replacement if involved as mutually agreed between purchaser of equipment and supplier. Modified documentation wherever applicable shall also be supplied.
b. Purchaser will decide the no. of interfaces required against the clause No. 2, 2.11 and 2.2.12.
c. Purchaser will decide the requirements against the clause no.2.2.13 and 2.2.14.
d. Purchaser will decide the requirement against the clause no. 2.5.1.
e. The manufacturer/supplier shall furnish the list of recommended spares.
f. The supplier shall have maintenance/repair facility in India.

d. The manufacturer shall guarantee the satisfactory performance of the equipment without any degradation in performance up to at an altitude upto 3,600 meters.

ABBREVIATIONS:

ACM	Adaptive Coding and Modulation
ADPCM	Adaptive Differential Pulse Code Modulation
AM	Amplitude modulation
AMR	Adaptive Multi Rate
APS	Automatic Protection Switching
BER	Bit Error Ratio
BNC	Bayonet nut coupling
cm	centimeter
°C	degree Celsius
CISPR	International Special Committee on Radio Interference
DC	Direct current
dB	decibel
dBc	decibels referenced to the carrier level
DCME	Digital circuit multiplication equipment
dBm	decibels referenced to a milli Watt
DVB	Digital Video Broadcasting
Eb/No	Energy per bit/Noise spectral density
EFR	Enhanced Full Rate
EMC	Electromagnetic Compatibility
EMI	Electromagnetic Interference
ESC	Engineering Service Channel
FEC	Forward Error Correction
FE	Fast Ethernet
FR	Full Rate
GE	Gigabit Ethernet
GHz	Giga Hertz
GR	Generic Requirements
HR	Half Rate
Hz	Hertz
IEC	International Electrotechnical Commission
IESS	Intelsat Earth Station Standards
IF	Intermediate Frequency
IFL	Intermediate Frequency loss
IS	Indian Standard
ISO	International Standardization Organization
ITU	International Telecommunication Union
kbps	kilo bits per second
kHz	kilo Hertz
KPI	Key Performance Index
kV	kilovolt
LO	Local oscillator
Mbps	Mega bits per second
MHz	Mega Hertz
mm	milli meter
ms	milli second
mW	milli watt
MTBF	Mean Time between Failure

MUX	Multiplexing
NMS	Network Management System
ns	nano second
OAM	Operation and Maintenance
p-p	peak to peak
PCM	Pulse Code Modulation
PM	Phase modulation
QA	Quality Assurance
QM	Quality Manual
REF	Reference
RX	Receive
TX	Transmit
V	Volts
VLAN	Virtual Local Area Network
V/m	volts/meter
W	Watt
WAN	Wide Area Network
μ s	micro second

****