ECU1
Edge Connector

Pin	Signal	Description
1	E1-T1	Air Temp Sensor
2	E2-TPS	Full Throttle & Diagnosis Point Groups II & IV
3	E3-INJ1&5	Injectors 1 & 5 (Group I)
4	E4-INJ4&8	Injectors 4 & 8 (Group II)
5	E5-INJ6&3	Injectors 6 & 3 (Group III)
6	E6-INJ7&2	Injectors 7 & 2 (Group IV)
7	E7-MPS	MPS Primary Coil Output
8	E8-MPS	MPS Secondary Coil Output
9	E9-TPS	TPS Acceleration Contact 1
10	E10-MPS	MPS Secondary Coil Input
11	E11-GND	ECU Ground (M5 on intake manifold)
12	E12-GND	TPS & PG Ground (internal tie to E11)
13	E13-PG	Pulse Generator Group II
14	E14-PG	Pulse Generator Group IV
15	E15-MPS	MPS Primary Coil Input
16	E16-12V	ECU Power (Main EFI Relay terminal 87)
17	E17-TPS	TPS Idle Contact
18	E18-CSV	Cold Start Relay (terminal 86)
19	E19-FPR	Fuel Pump Relay (switched ground terminal 85)
20	E20-TPS	TPS Acceleration Contact 2
21	E21-PG	Pulse Generator Group I
22	E22-PG	Pulse Generator Group III
23	E23-T2	Coolant Temp Sensor
24	E24-12V	Injector Driver Power (Main EFI Relay terminal 87)
25	E25-DIAG1	Diagnosis Point Groups I & III

Earth: pins 11, 12
+12V: pins 16, 24

Hard Wiring to Auxilliary Board

+10V

Pin	Signal	Description
AUX1-10V		Regulated 10V
AUX2-IDL		Idle-Run Mixture Control
AUX3-AE9		Throttle Enrich
AUX4-GND		Ground
AUX5-AE20		Throttle Enrich
AUX6-VE*		Speed Bias VE Curve
AUX7-12V		ECU Power
AUX8-T2*		Coolant Temp Bias
AUX9-BP		Base Injection Pulse
AUX10-SP		Speed Sense Pulse
AUX11-TGL		Lo = Groups II & IV Enable
AUX12-TGL		Lo = Groups I & III Enable
AUX13-SV		Speed Validated
AUX14-MP*		Groups II & IV Modified Injector Pulse
AUX15-BP		Groups II & IV Base Injector Pulse
AUX16-EP		Enrich Pulse
AUX17-MP*		Groups I & III Modified Injector Pulse
AUX18-BP		Groups I & III Base Injector Pulse
Int-1		Combined Injector Pulse Groups I & III
Int-2		Combined Injector Pulse Groups II & IV
Int-3		Over Run Inject Disable
Int-4		Engine Run Threshold
Int-5		Idle-Run Mixture Control
Int-6		Mixture Bias
Int-7		Injector Group Toggle

Main Board Sections

Pin	Signal	Description
Int-A1		Enrich Bias Groups I & III
Int-A2		Enrich Bias Groups II & IV

Auxiliary Board Sections

Input / Output & Interior Connections
Mercedes-Benz Part # A 000 545 26 32
Bosch Order # 0 280 002 005
M117.982 Engine
Mercedes-Benz

Sheet: /
File: Bosch ECU 0 280 002 005.sch

Title: Bosch D-Jetronic ECU 0 280 002 005

Size: B	Date: 2020-08-09	Rev: 1.05
KiCad E.D.A. kicad (5.1.6)-1		Id: 1/21

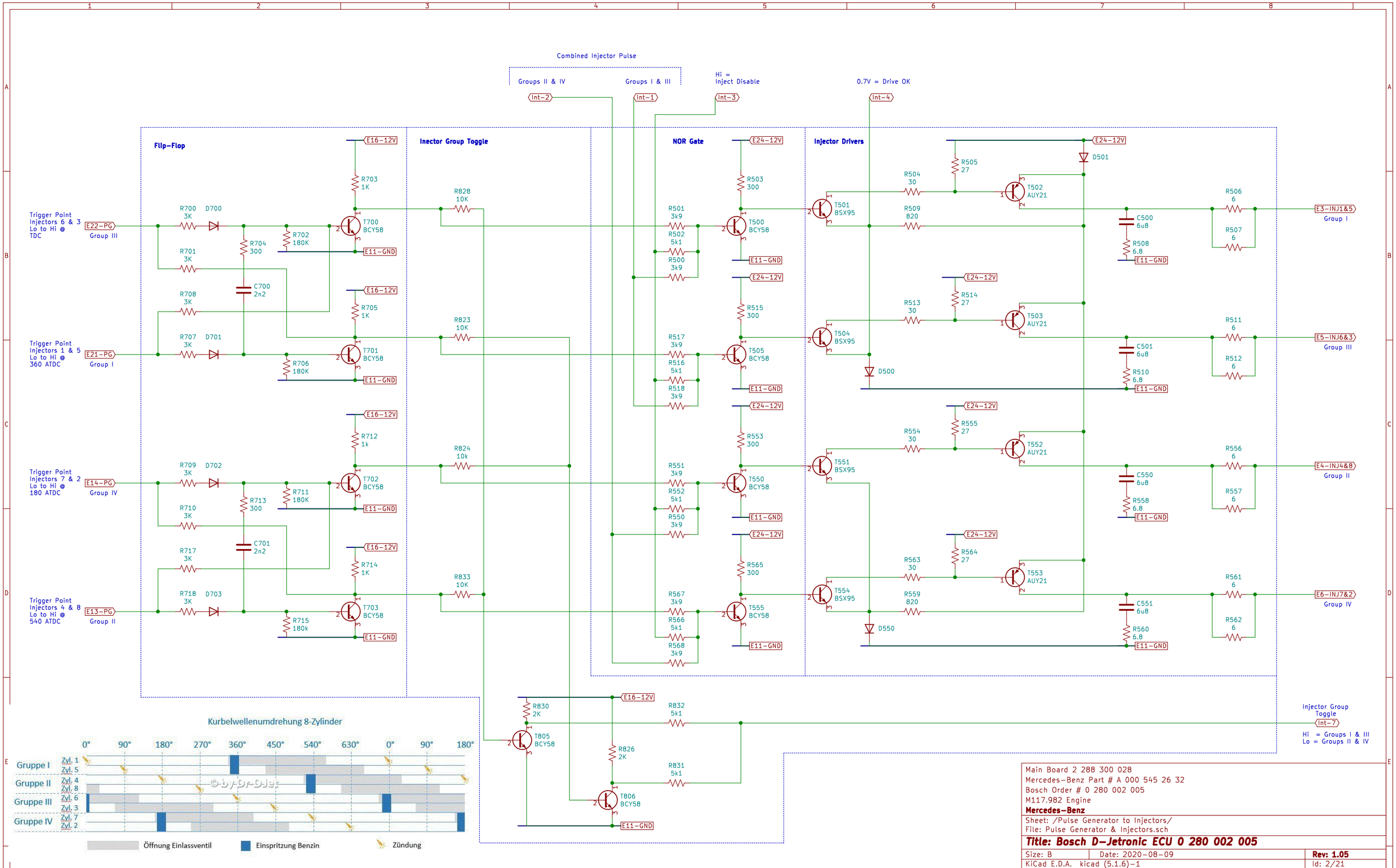
Combined Injector Pulse
Groups II & IV
Groups I & III
Hi =
Inject Disable
0.7V = Drive OK
Int-2
Int-1
Int-3
Int-4
Flip-Flop
Inector Group Toggle
NOR Gate
Injector Drivers
Trigger Point
Injectors 6 & 3
Lo to Hi @
TDC
E22-PG
Group III
Trigger Point
Injectors 1 & 5
Lo to Hi @
360 ATDC
E21-PG
Group I
Trigger Point
Injectors 7 & 2
Lo to Hi @
180 ATDC
E14-PG
Group IV
Trigger Point
Injectors 4 & 8
Lo to Hi @
540 ATDC
E13-PG
Group II
E3-INJ1&5
Group I
E5-INJ6&3
Group III
E4-INJ4&8
Group II
E6-INJ7&2
Group IV
Injector Group
Toggle
Int-7
Hi = Groups I & III
Lo = Groups II & IV
E16-12V
E11-GND
E24-12V
Kurbelwellenumdrehung 8-Zylinder
0° 90° 180° 270° 360° 450° 540° 630° 0° 90° 180°
Gruppe I Zyl. 1 Zyl. 5
Gruppe II Zyl. 4 Zyl. 8
Gruppe III Zyl. 6 Zyl. 3
Gruppe IV Zyl. 7 Zyl. 2
Öffnung Einlassventil
Einspritzung Benzin
Zündung
Main Board 2 288 300 028
Mercedes-Benz Part # A 000 545 26 32
Bosch Order # 0 280 002 005
M117.982 Engine
Mercedes-Benz
Sheet: /Pulse Generator to Injectors/
File: Pulse Generator & Injectors.sch
Title: Bosch D-Jetronic ECU 0 280 002 005
Size: B
Date: 2020-08-09
Rev: 1.05
KiCad E.D.A. kicad (5.1.6)-1
Id: 2/21

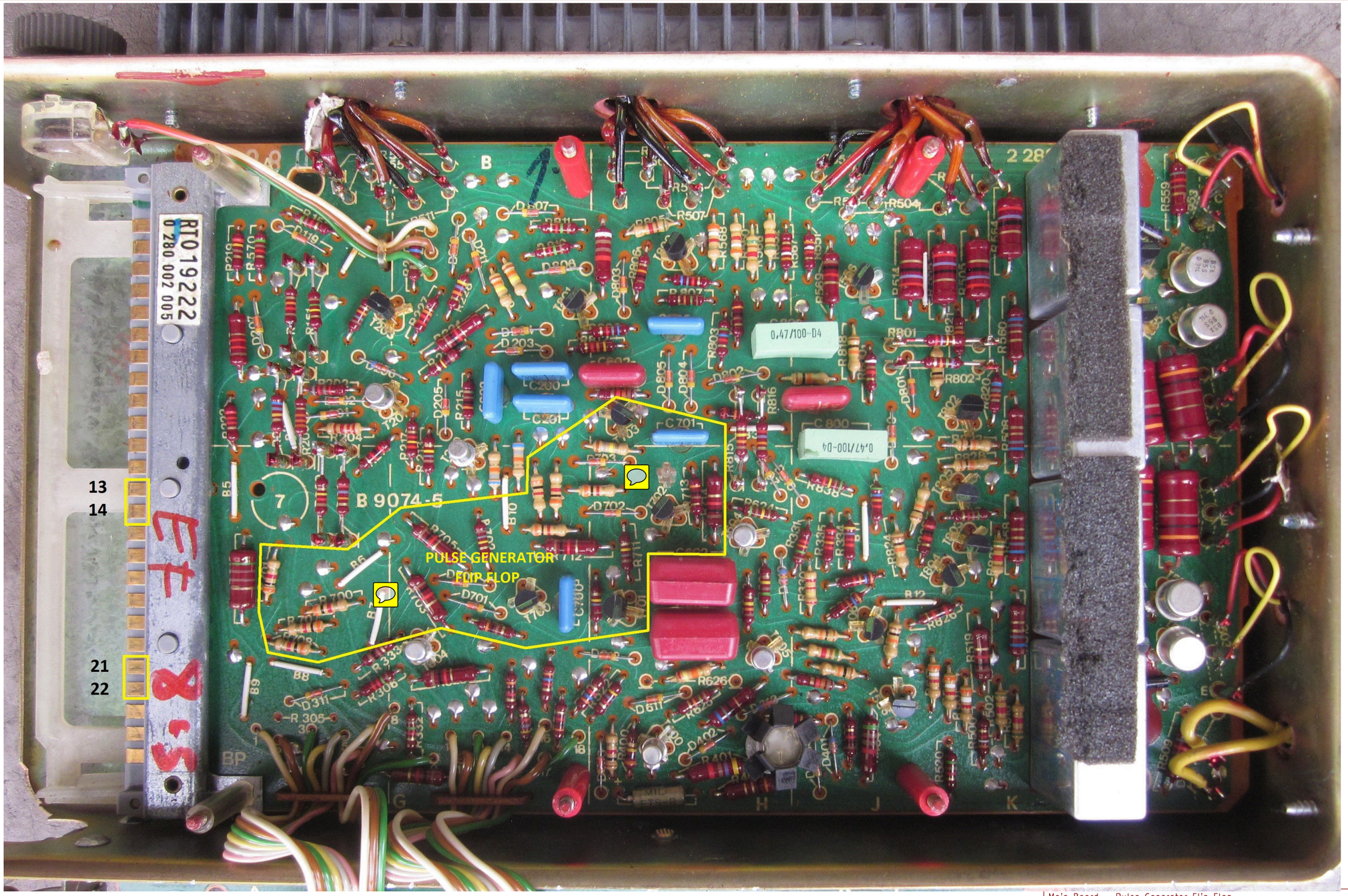

Main Board – Pulse Generator Flip Flop
Mercedes-Benz Part # A 000 545 26 32
Bosch Order # 0 280 002 005
M117.982 Engine
Mercedes-Benz

Sheet: /Pulse Generator to Injectors/700 PG Flip Flop/
File: 700 PG Flip Flop.sch

Title: Bosch D-Jetronic ECU 0 280 002 005

Size: USLedger	Date: 2020-08-09	**Rev: 1.05**
KiCad E.D.A. kicad (5.1.6)-1		Id: 3/21

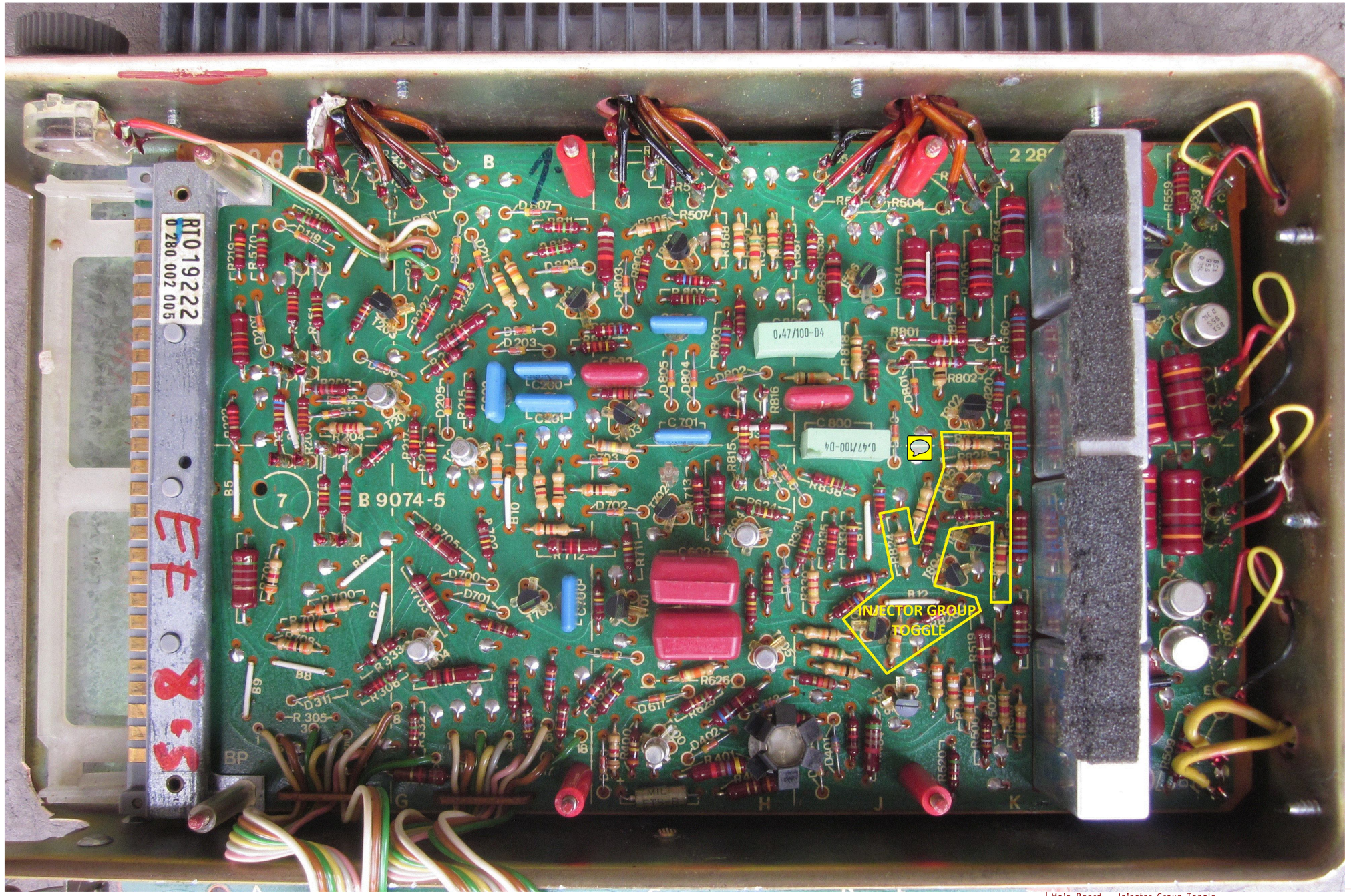

Main Board – Injector Group Toggle
Mercedes-Benz Part # A 000 545 26 32
Bosch Order # 0 280 002 005
M117.982 Engine
Mercedes-Benz

Sheet: /Pulse Generator to Injectors/800 Injector Group Toggle/
File: 800 Injector Group Toggle.sch

Title: Bosch D-Jetronic ECU 0 280 002 005

Size: B	Date: 2020-08-09	**Rev: 1.05**
KiCad E.D.A. kicad (5.1.6)-1		Id: 4/21

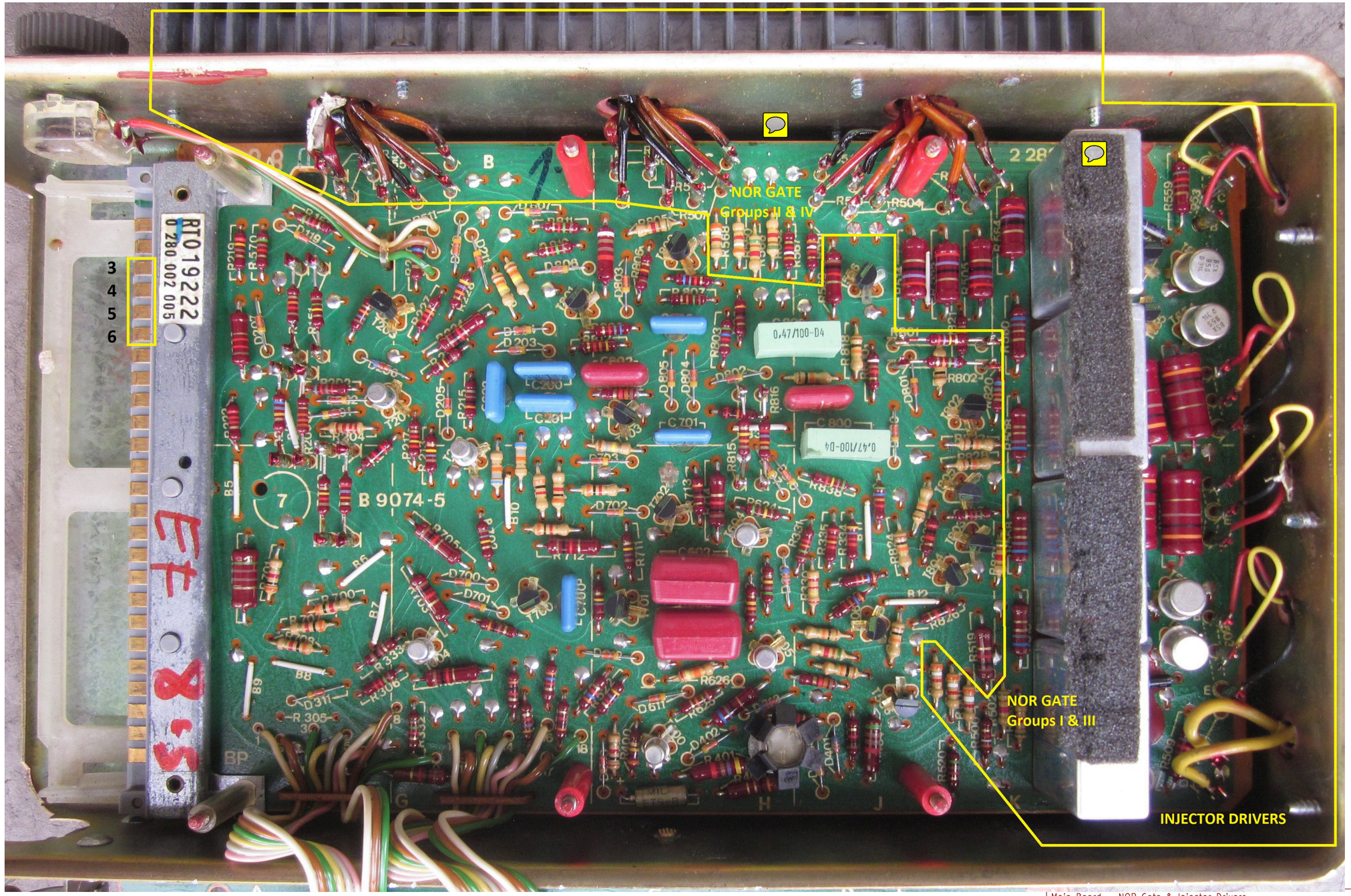

Main Board – NOR Gate & Injector Drivers
Mercedes-Benz Part # A 000 545 26 32
Bosch Order # 0 280 002 005
M117.982 Engine
Mercedes-Benz

Sheet: /Pulse Generator to Injectors/500 NOR Gate & Injector Drivers/
File: 500 NOR Gate Injector Drivers.sch

Title: Bosch D-Jetronic ECU 0 280 002 005

Size: B	Date: 2020-08-09	**Rev: 1.05**
KiCad E.D.A. kicad (5.1.6)-1		Id: 5/21

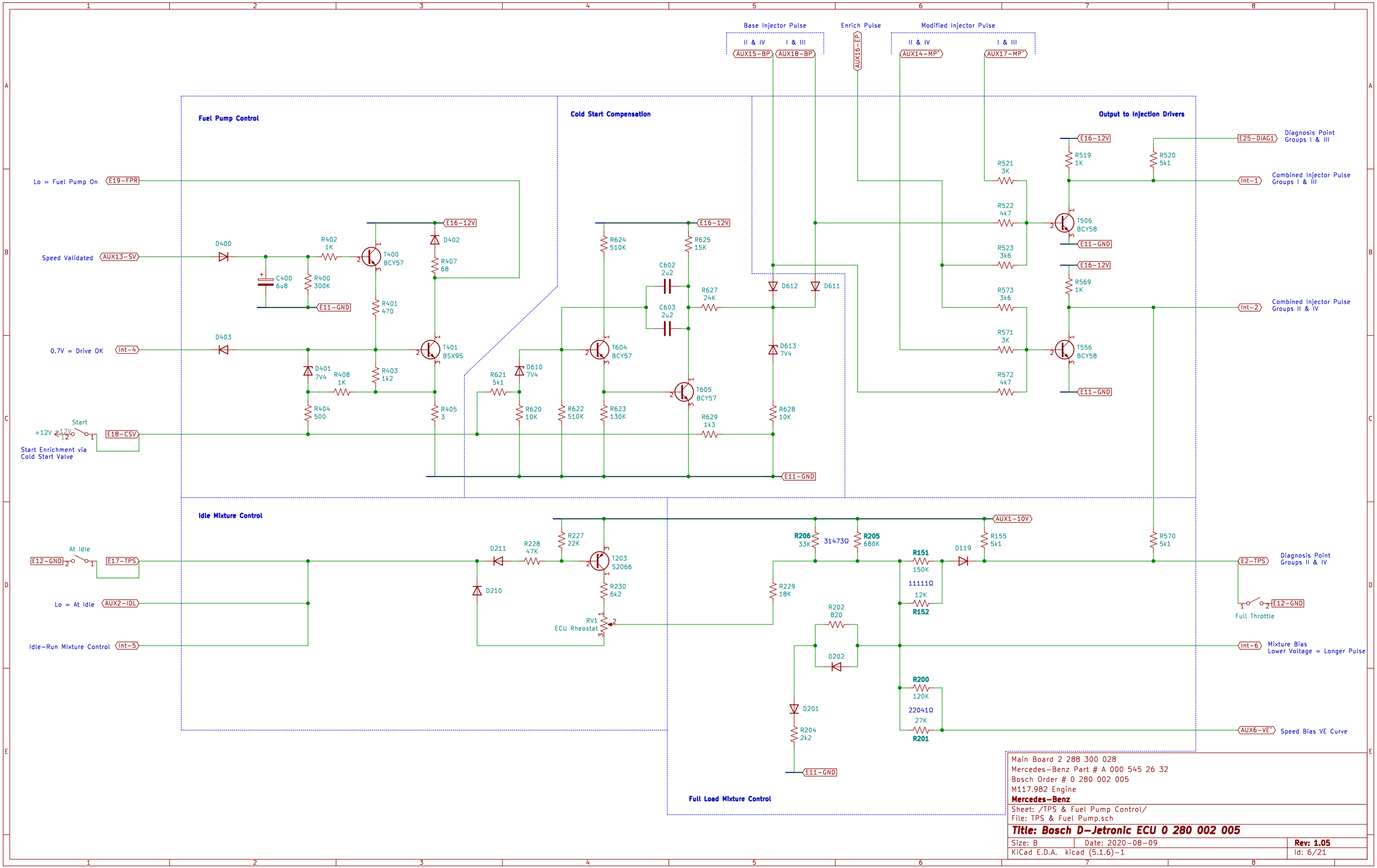

Main Board 2 288 300 028
Mercedes-Benz Part # A 000 545 26 32
Bosch Order # 0 280 002 005
M117.982 Engine
Mercedes-Benz

Sheet: /TPS & Fuel Pump Control/
File: TPS & Fuel Pump.sch

Title: Bosch D-Jetronic ECU 0 280 002 005

Size: B	Date: 2020-08-09	Rev: 1.05
KiCad E.D.A. kicad (5.1.6)-1		Id: 6/21

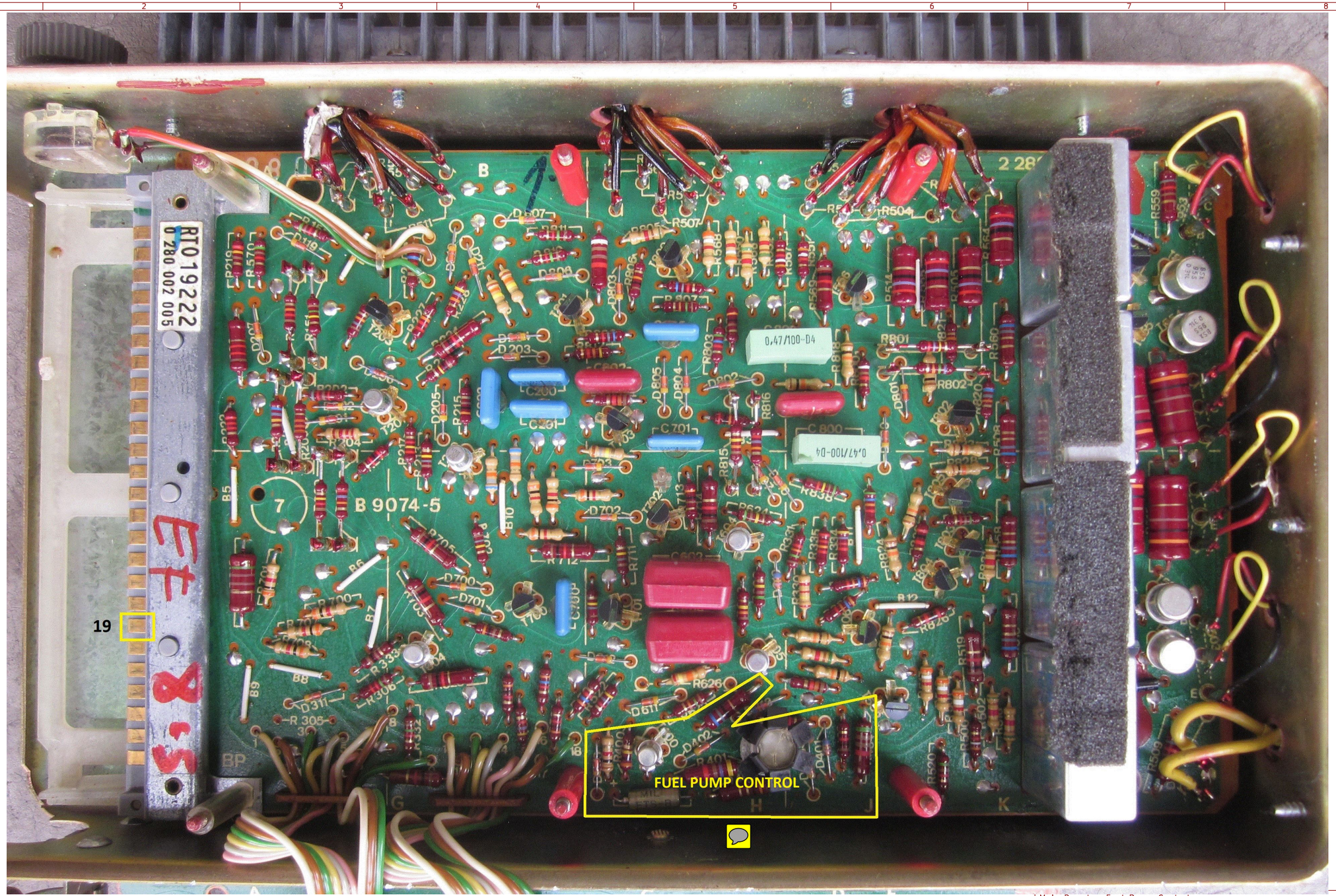

Main Board – Fuel Pump Control
Mercedes-Benz Part # A 000 545 26 32
Bosch Order # 0 280 002 005
M117.982 Engine
Mercedes-Benz

Sheet: /TPS & Fuel Pump Control/400 Fuel Pump Control/
File: 400 Fuel Pump Control.sch

Title: Bosch D-Jetronic ECU 0 280 002 005

Size: B	Date: 2020-08-09	**Rev: 1.05**
KiCad E.D.A. kicad (5.1.6)-1		Id: 7/21

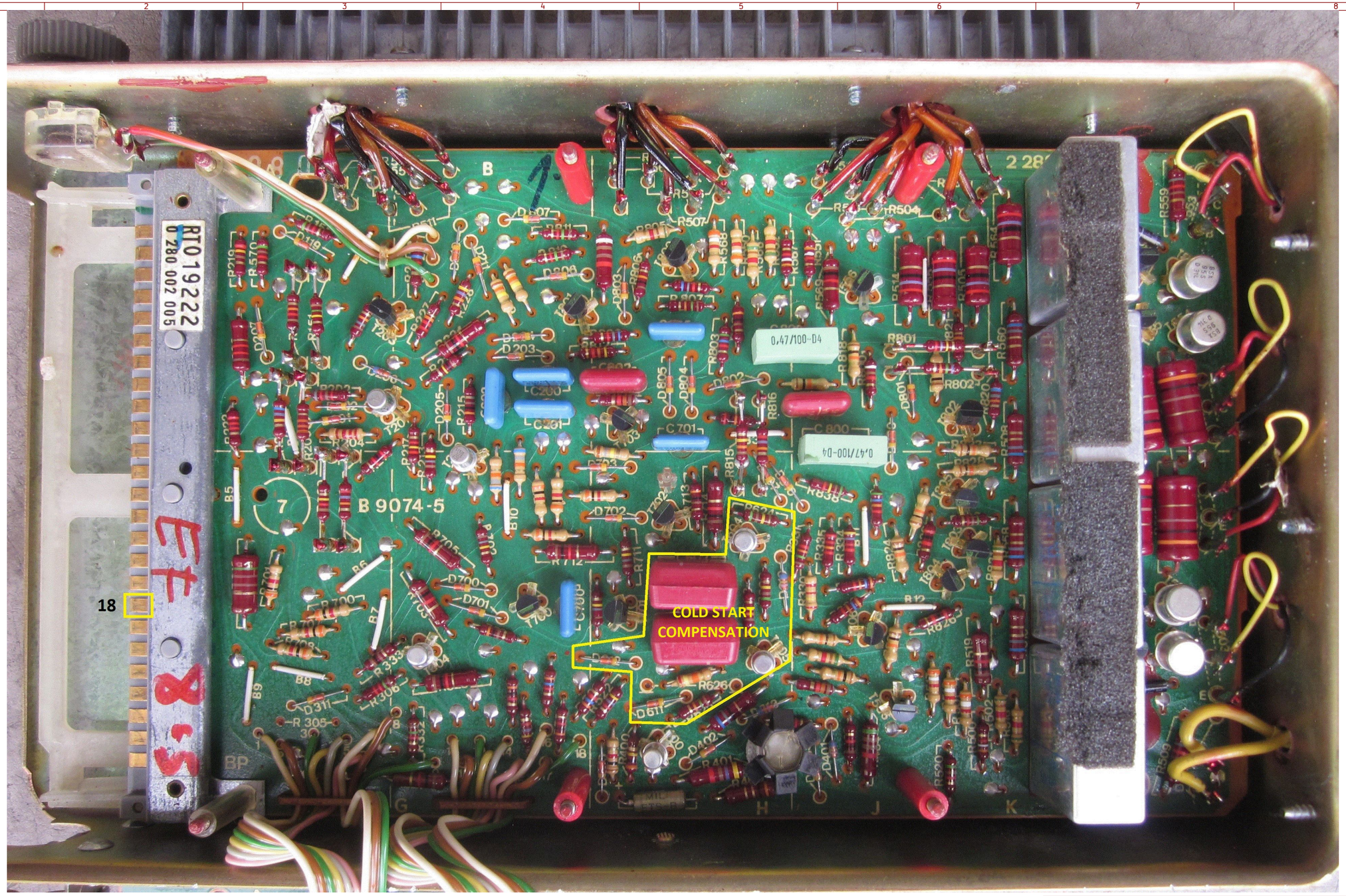

Main Board – Cold Start Compensation
Mercedes-Benz Part # A 000 545 26 32
Bosch Order # 0 280 002 005
M117.982 Engine
Mercedes-Benz

Sheet: /TPS & Fuel Pump Control/600 Cold Start Compensation/
File: 600 Cold Start Compensation.sch

Title: Bosch D-Jetronic ECU 0 280 002 005

Size: B	Date: 2020-08-09	**Rev: 1.05**
KiCad E.D.A. kicad (5.1.6)-1		Id: 8/21

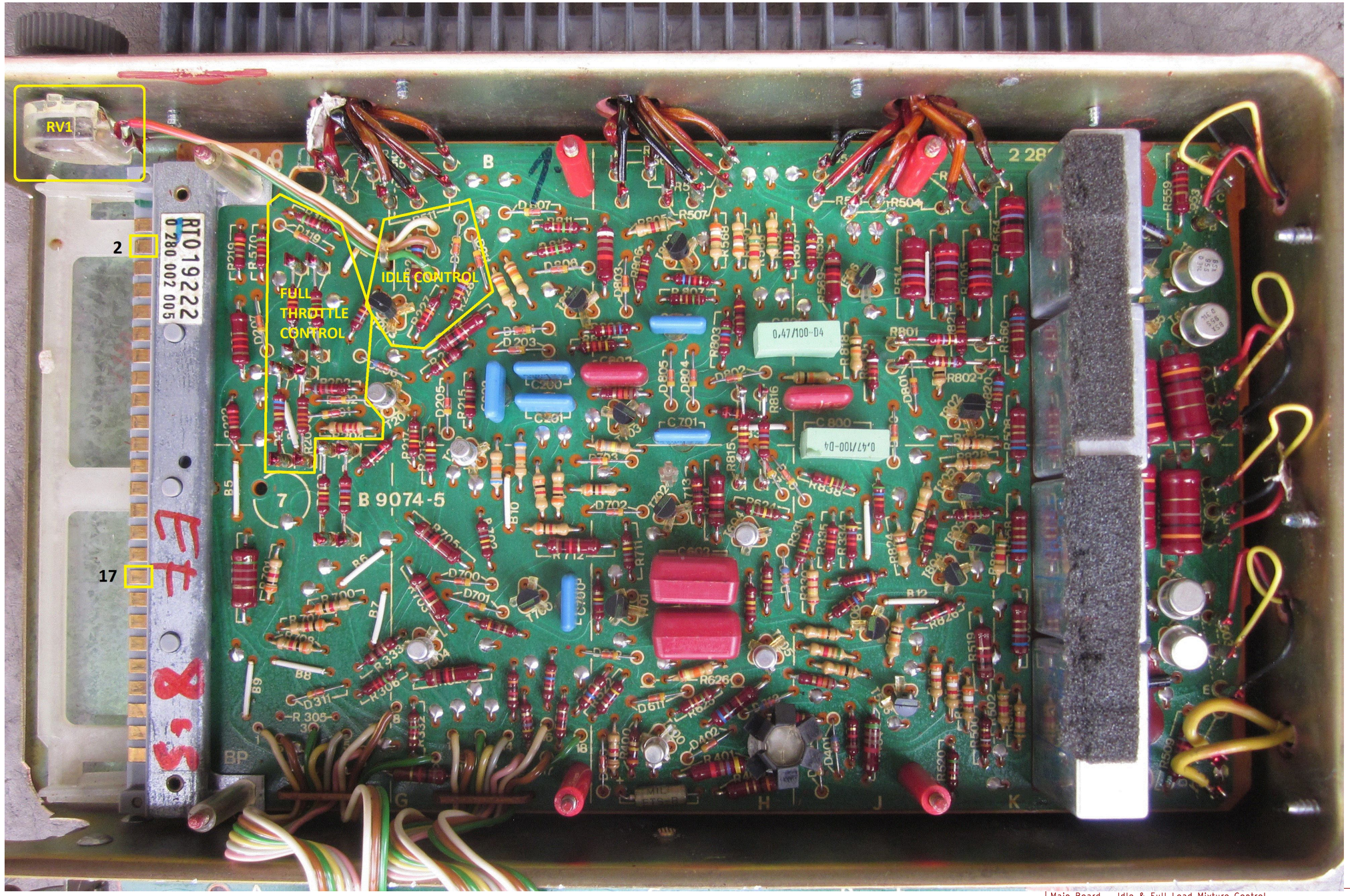

Main Board – Idle & Full Load Mixture Control
Mercedes-Benz Part # A 000 545 26 32
Bosch Order # 0 280 002 005
M117.982 Engine
Mercedes-Benz

Sheet: /TPS & Fuel Pump Control/200 Idle & Full Load Mixture Control/
File: 200 Idle.Full Mixture Control.sch

Title: Bosch D-Jetronic ECU 0 280 002 005

Size: B	Date: 2020-08-09	**Rev: 1.05**
KiCad E.D.A. kicad (5.1.6)-1		Id: 9/21

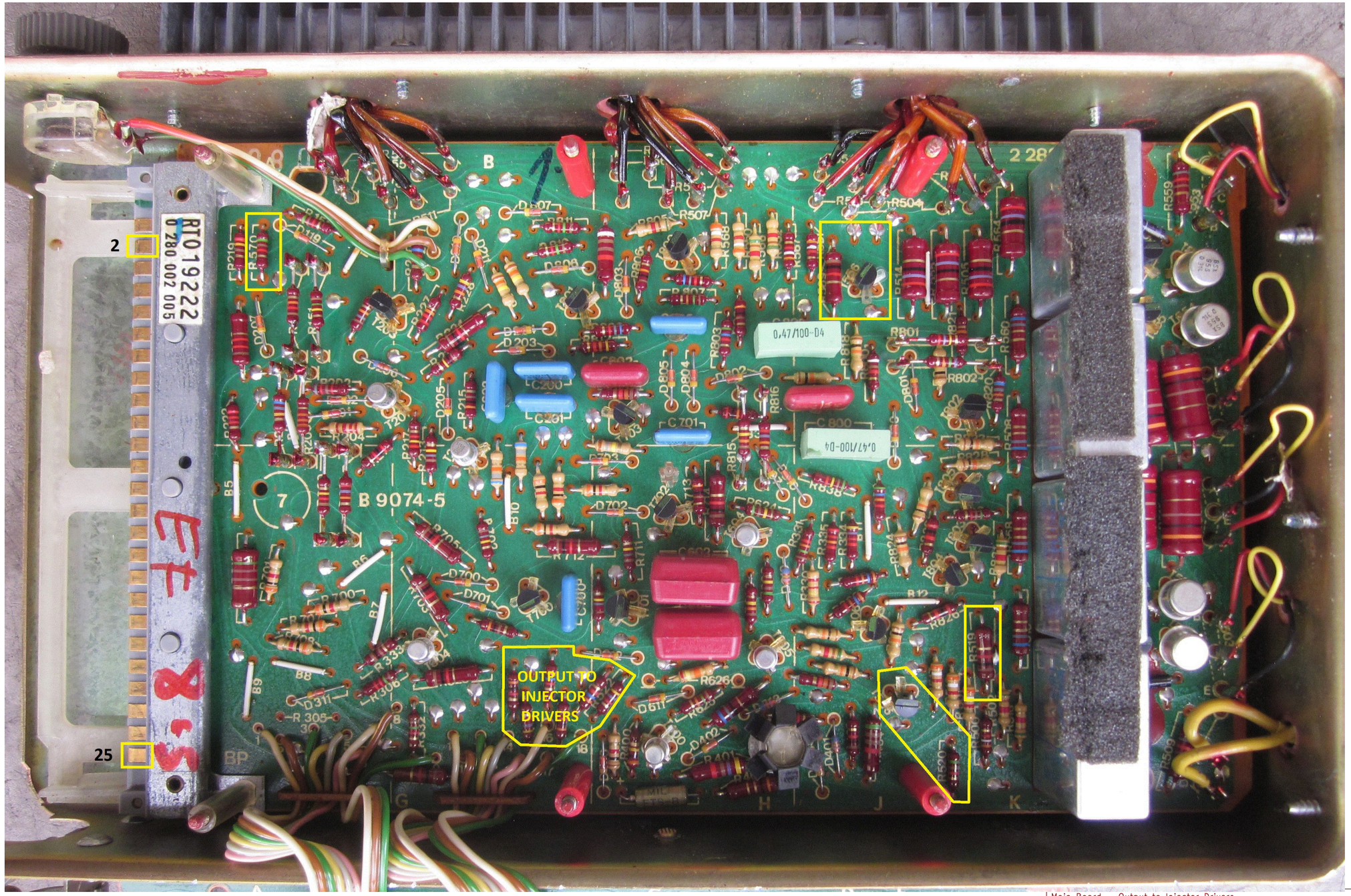

Main Board – Output to Injector Drivers
Mercedes-Benz Part # A 000 545 26 32
Bosch Order # 0 280 002 005
M117.982 Engine
Mercedes-Benz

Sheet: /TPS & Fuel Pump Control/500 Output to Injector Drivers/
File: 500 Output to Injector Drivers.sch

Title: Bosch D-Jetronic ECU 0 280 002 005

Size: B	Date: 2020-08-09	**Rev: 1.05**
KiCad E.D.A. kicad (5.1.6)-1		Id: 10/21

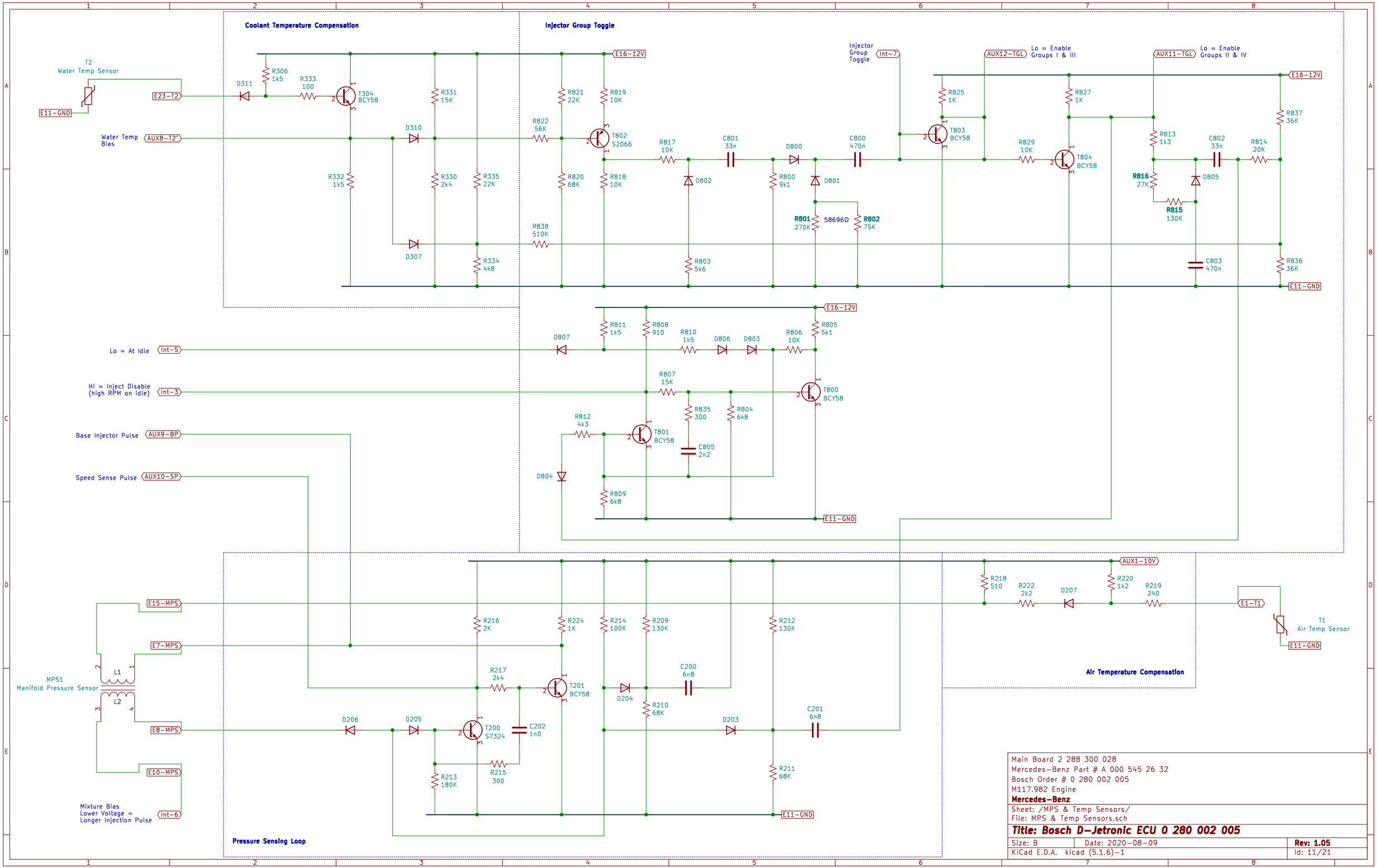

Main Board 2 288 300 028
Mercedes-Benz Part # A 000 545 26 32
Bosch Order # 0 280 002 005
M117.982 Engine
Mercedes-Benz

Sheet: /MPS & Temp Sensors/
File: MPS & Temp Sensors.sch

Title: Bosch D-Jetronic ECU 0 280 002 005

Size: B	Date: 2020-08-09	Rev: 1.05
KiCad E.D.A. kicad (5.1.6)-1		Id: 11/21

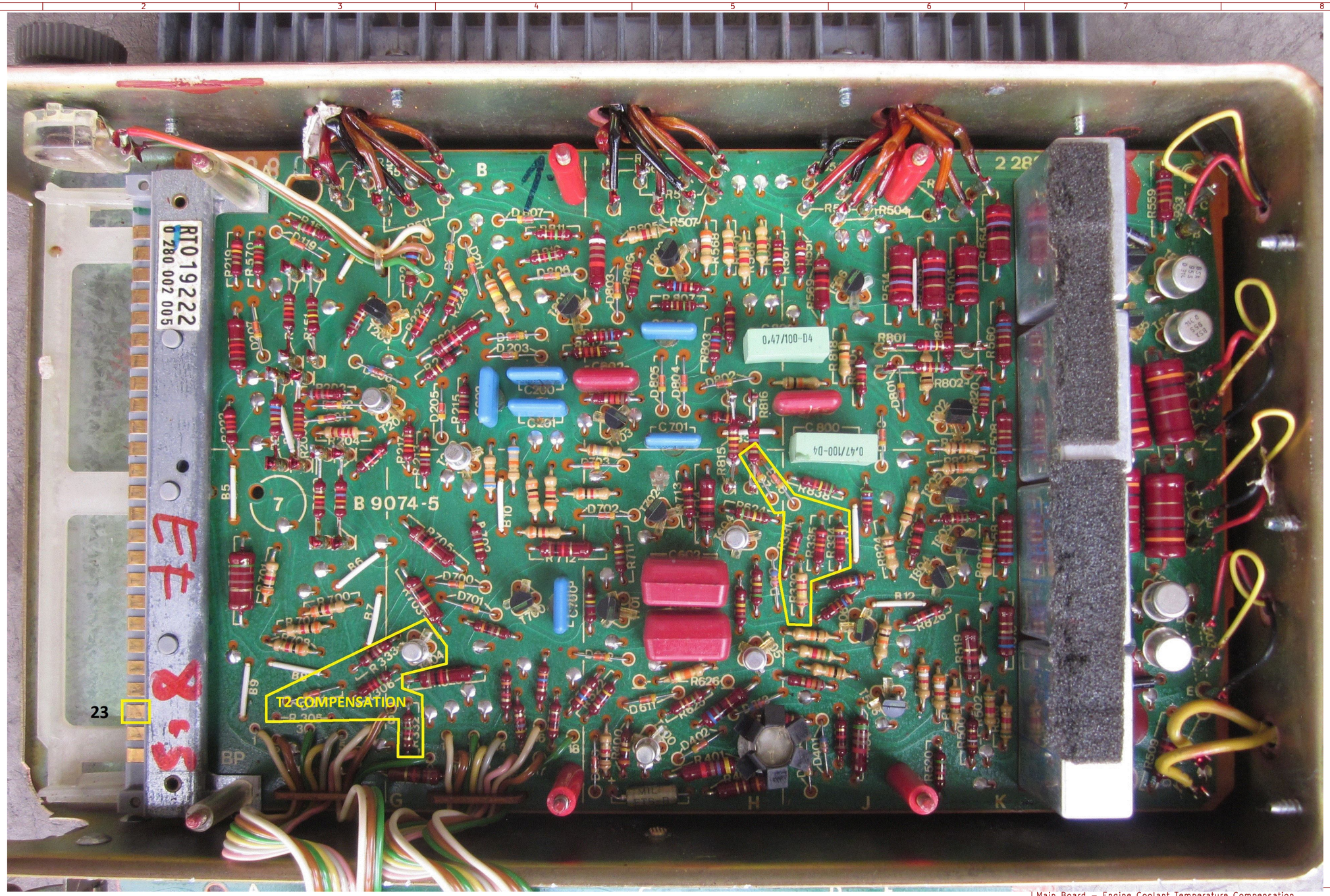

Main Board – Engine Coolant Temperature Compensation
Mercedes-Benz Part # A 000 545 26 32
Bosch Order # 0 280 002 005
M117.982 Engine
Mercedes-Benz

Sheet: /MPS & Temp Sensors/300 T2 Compensation/
File: 300 T2 Compensation.sch

Title: Bosch D-Jetronic ECU 0 280 002 005

Size: B	Date: 2020-08-09	**Rev: 1.05**
KiCad E.D.A. kicad (5.1.6)-1		Id: 12/21

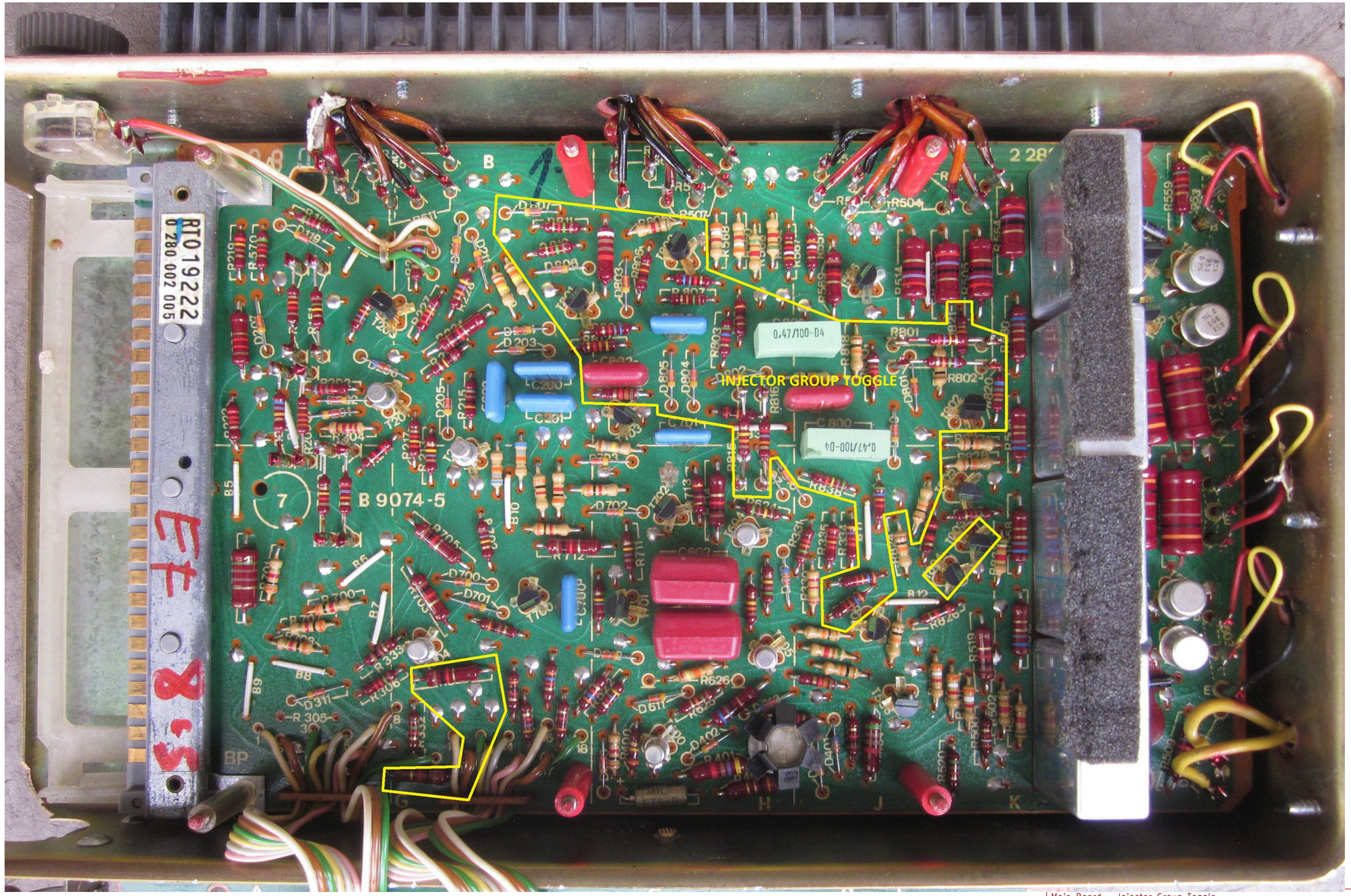

Main Board – Injector Group Toggle
Mercedes-Benz Part # A 000 545 26 32
Bosch Order # 0 280 002 005
M117.982 Engine
Mercedes-Benz

Sheet: /MPS & Temp Sensors/800 Injector Group Toggle 2/
File: 800 Injector Group Toggle 2.sch

Title: Bosch D-Jetronic ECU 0 280 002 005

Size: B	Date: 2020-08-09	**Rev: 1.05**
KiCad E.D.A. kicad (5.1.6)-1		Id: 13/21

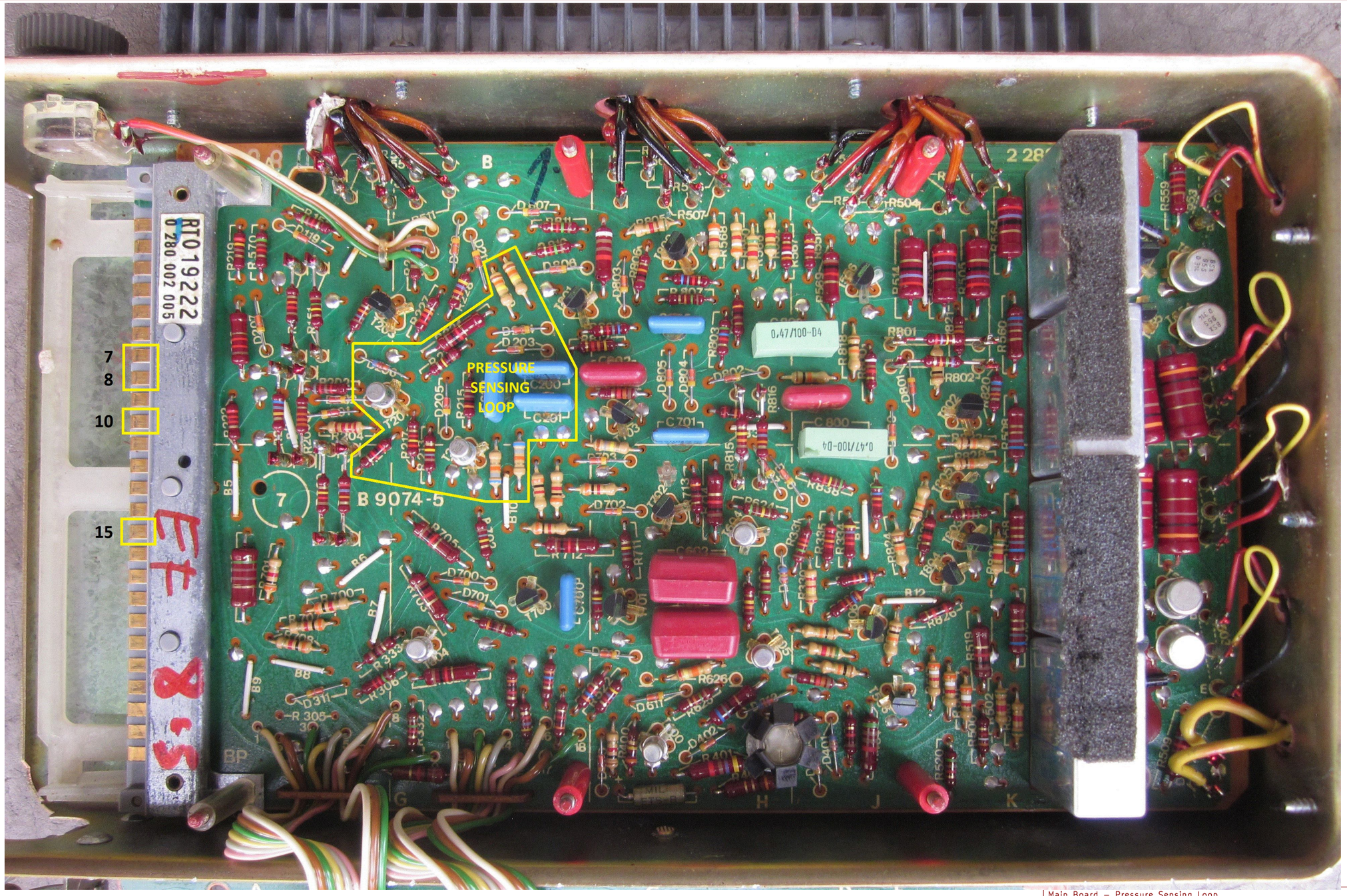

Main Board – Pressure Sensing Loop
Mercedes–Benz Part # A 000 545 26 32
Bosch Order # 0 280 002 005
M117.982 Engine
Mercedes–Benz

Sheet: /MPS & Temp Sensors/200 Pressure Sensing Loop/
File: 200 Pressure Sensing Loop.sch

Title: Bosch D–Jetronic ECU 0 280 002 005

Size: B	Date: 2020–08–09	**Rev: 1.05**
KiCad E.D.A. kicad (5.1.6)–1		Id: 14/21

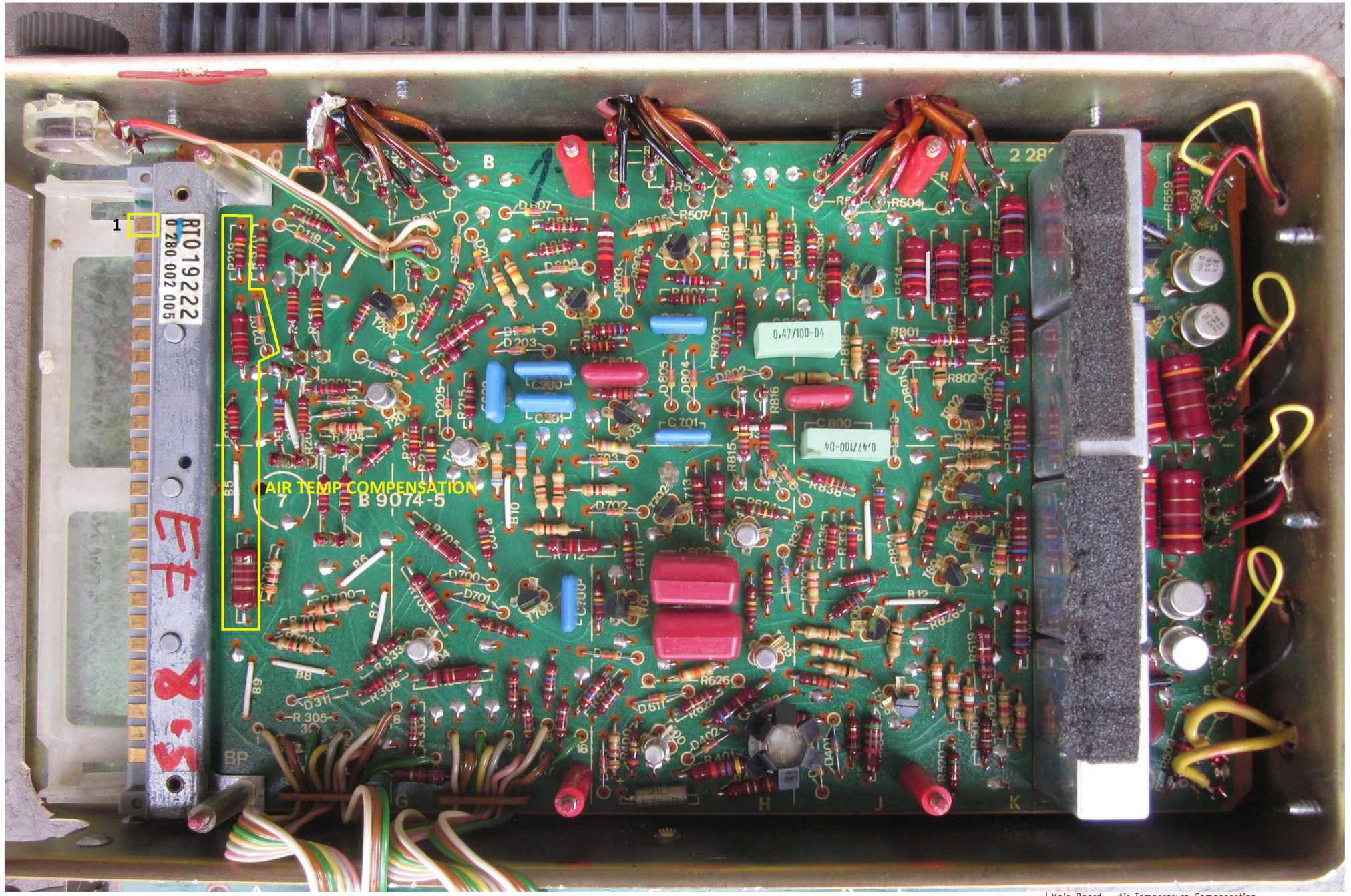

Main Board – Air Temperature Compensation
Mercedes-Benz Part # A 000 545 26 32
Bosch Order # 0 280 002 005
M117.982 Engine
Mercedes-Benz

Sheet: /MPS & Temp Sensors/200 Air Temperature Compensation/
File: 200 T1 Compensation.sch

Title: Bosch D-Jetronic ECU 0 280 002 005

Size: B	Date: 2020-08-09	**Rev: 1.05**
KiCad E.D.A. kicad (5.1.6)-1		Id: 15/21

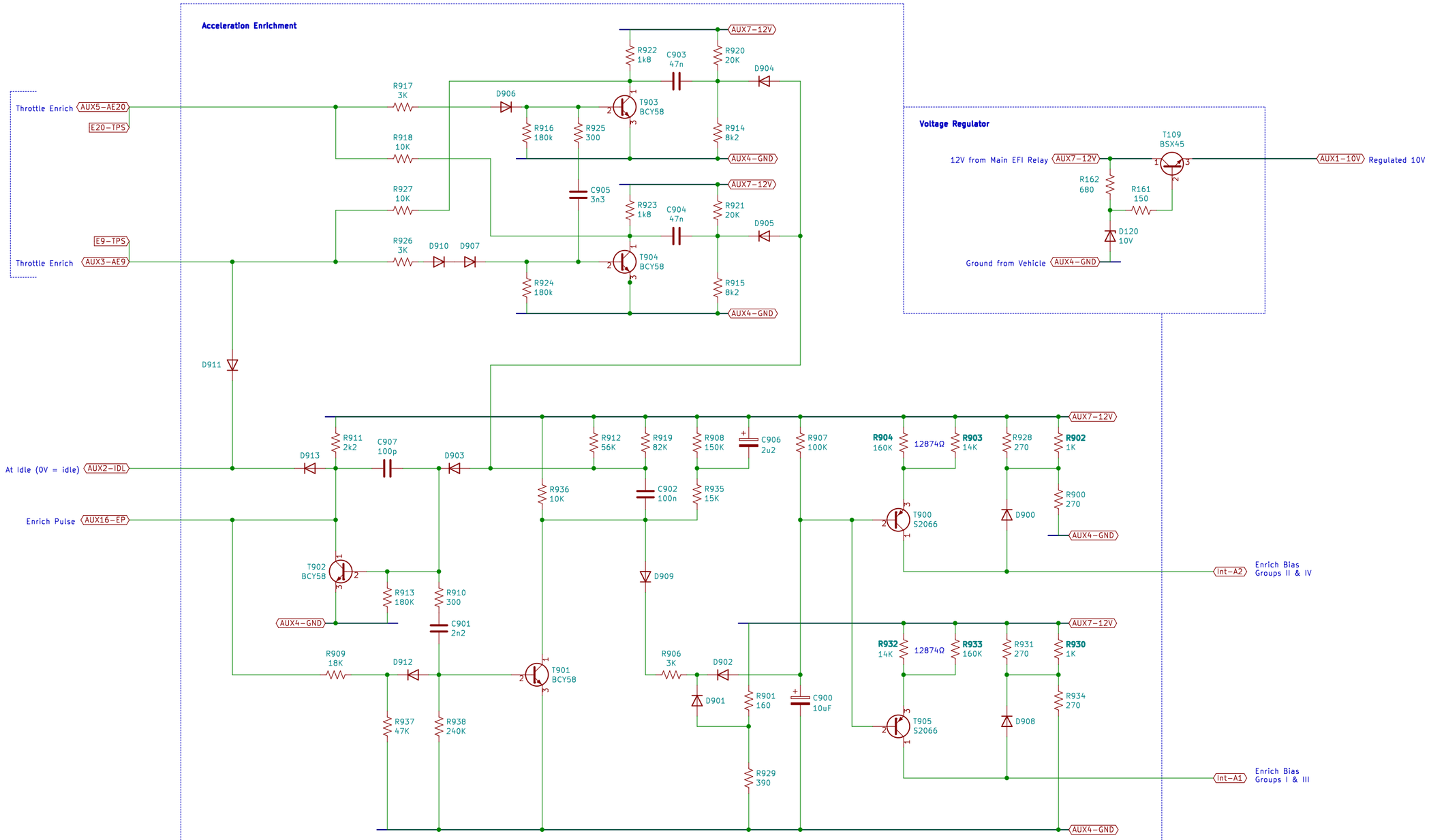

Auxiliary Board 2 288 300 029
Mercedes-Benz Part # A 000 545 26 32
Bosch Order # 0 280 002 005
M117.982 Engine
Mercedes-Benz

Sheet: /Auxiliary Board 1/
File: Aux Board 1.sch

Title: Bosch D-Jetronic ECU 0 280 002 005

Size: B	Date: 2020-08-09	Rev: 1.05
KiCad E.D.A. kicad (5.1.6)-1		Id: 16/21

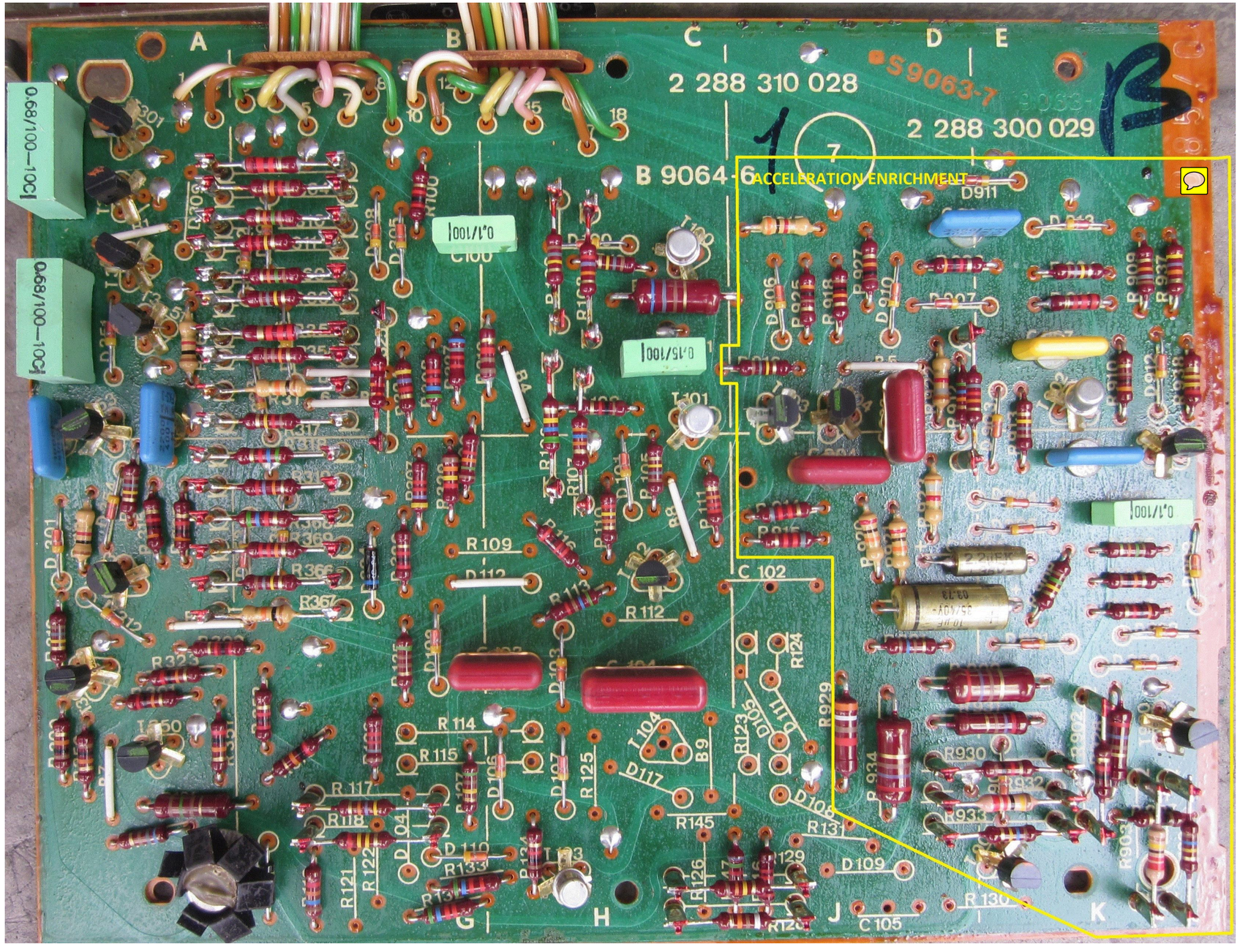
2 288 310 028
S9063-7
2 288 300 029
B 9064-6
ACCELERATION ENRICHMENT
0.68/100—10C
0.68/100—10C
0.1/100
0.15/100
0.1/100
R 109
R 112
C 102
R 114
R 115
R 117
R 118
R 121
R 122
R 125
R 145
R 123
R 124
R 929
R 930
R 932
R 933
R 934
R 131
R 130
D 109
C 105
D 911
D 117
D 105
D 111
D 108
D 112
D 110
D 104
D 106
D 107
D 113
D 114
D 119
D 906
D 910
D 912
D 913
D 916
D 920
D 922
D 301
D 216
R 323
R 367
R 366
R 369
R 317
R 335
R 351
R 907
R 908
R 909
R 910
R 911
R 912
R 913
R 916
R 918
R 920
R 922
R 925
R 927
R 937
R 903
R 902
R 901
R 904
R 905
R 906

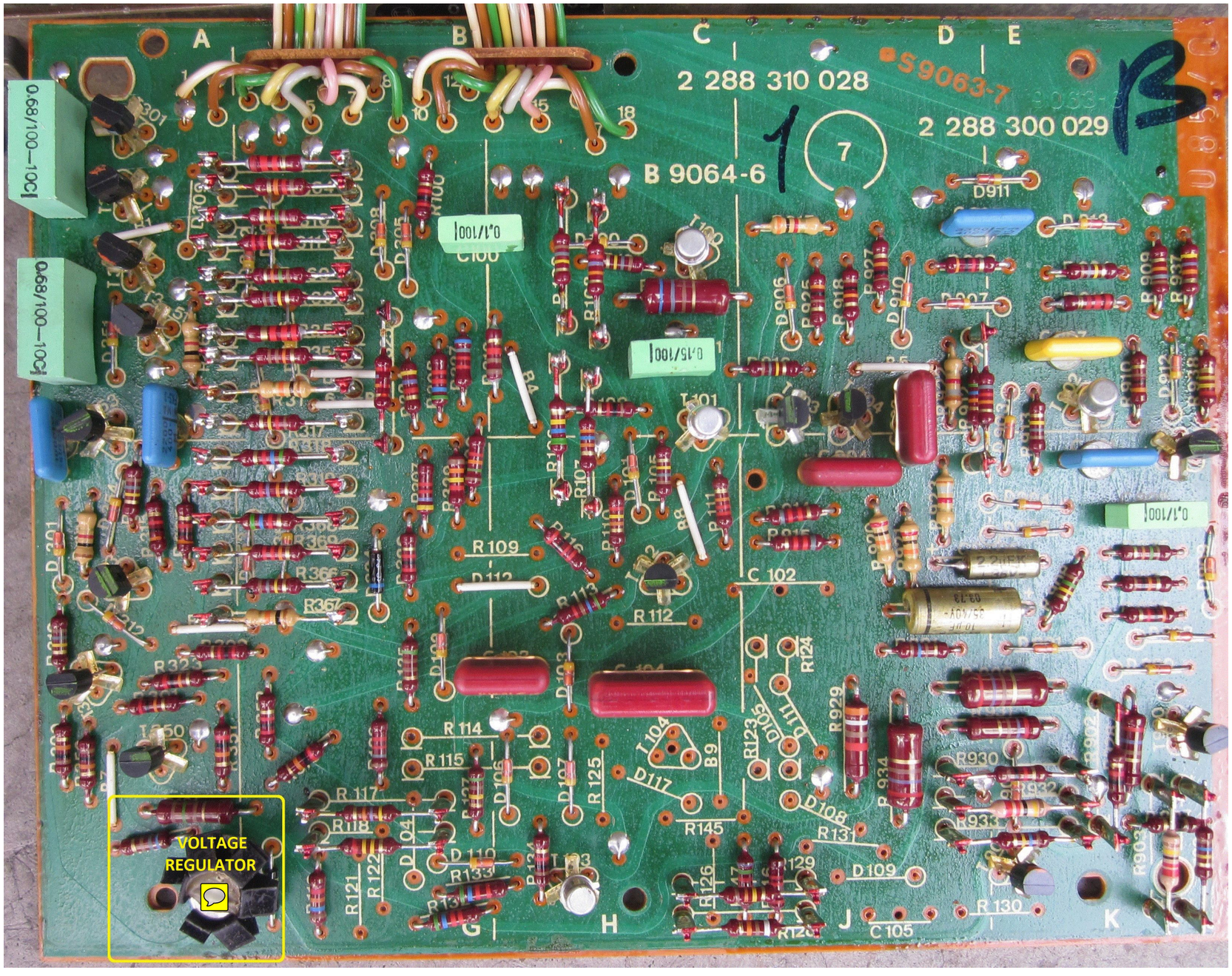

Auxiliary Board – Voltage Regulator [+10V]
Mercedes-Benz Part # A 000 545 26 32
Bosch Order # 0 280 002 005
M117.982 Engine
Mercedes-Benz

Sheet: /Auxiliary Board 1/100 Voltage Regulator/
File: 100 Voltage Regulator.sch

Title: Bosch D-Jetronic ECU 0 280 002 005

Size: B	Date: 2020-08-09	**Rev: 1.05**
KiCad E.D.A. kicad (5.1.6)-1		Id: 18/21

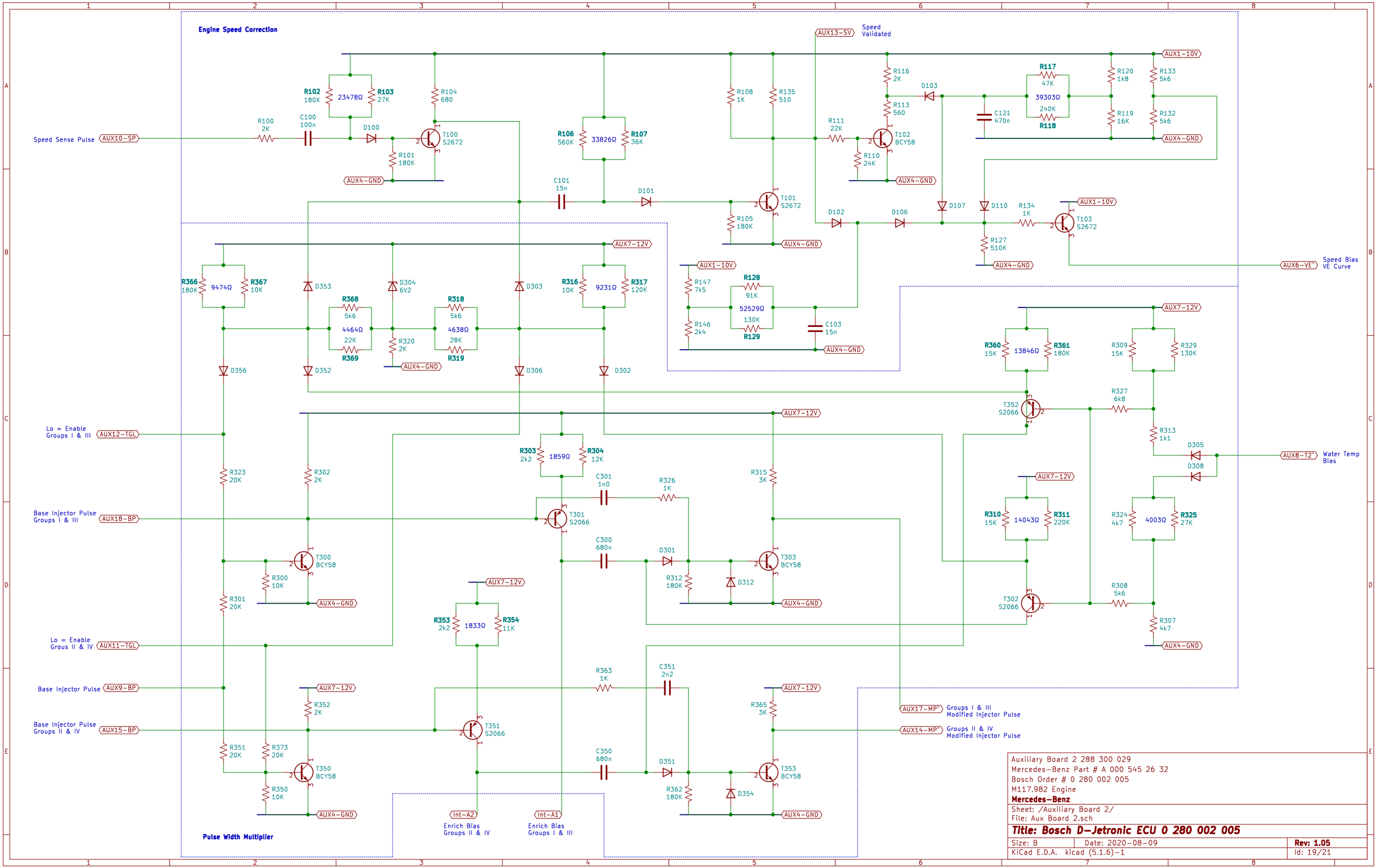

Auxiliary Board 2 288 300 029
Mercedes-Benz Part # A 000 545 26 32
Bosch Order # 0 280 002 005
M117.982 Engine
Mercedes-Benz

Sheet: /Auxiliary Board 2/
File: Aux Board 2.sch

Title: Bosch D-Jetronic ECU 0 280 002 005

Size: B	Date: 2020-08-09	Rev: 1.05
KiCad E.D.A. kicad (5.1.6)-1		Id: 19/21

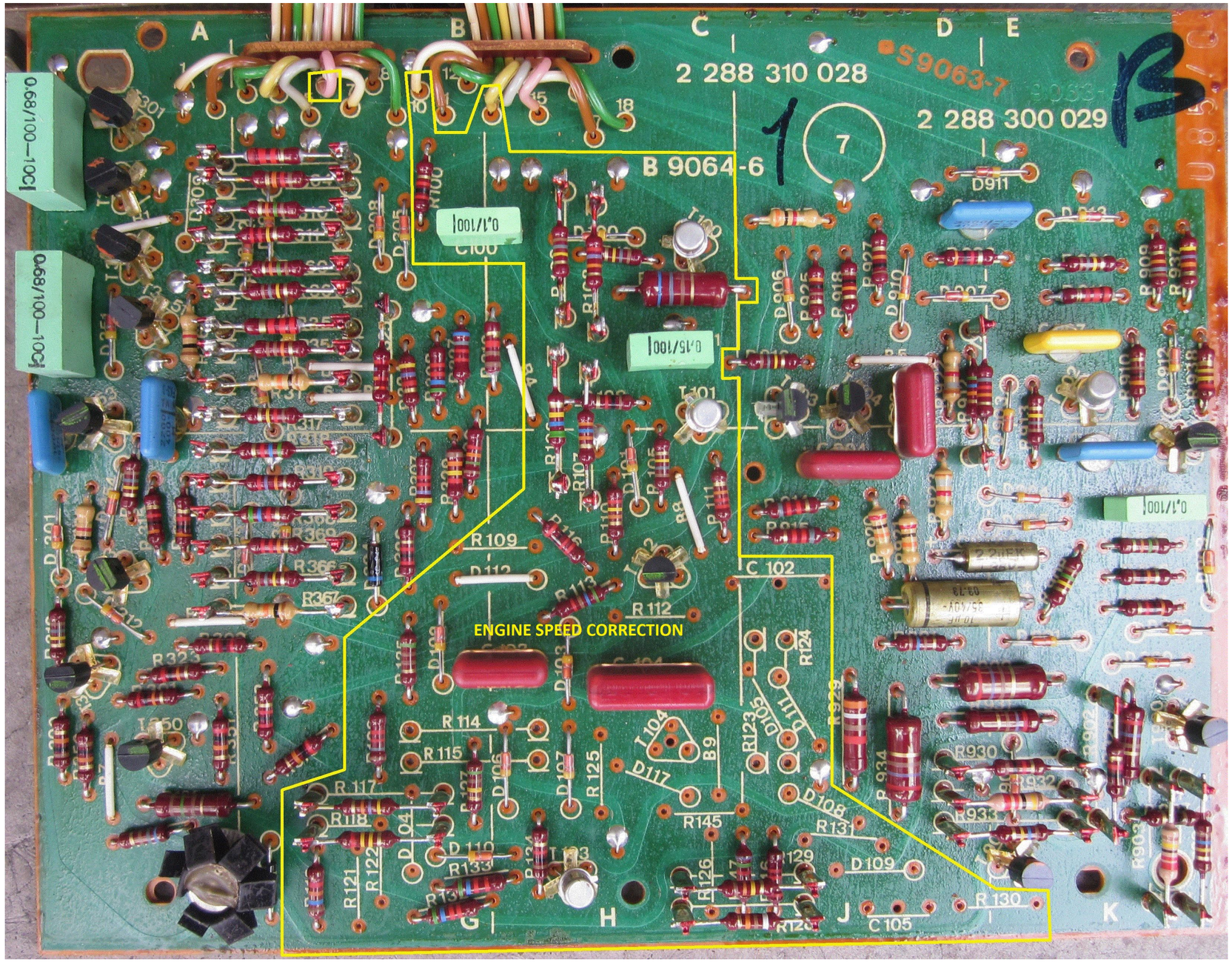

Auxiliary Board – Engine Speed Correction
Mercedes-Benz Part # A 000 545 26 32
Bosch Order # 0 280 002 005
M117.982 Engine
Mercedes-Benz

Sheet: /Auxiliary Board 2/100 Engine Speed Correction/
File: 100 Engine Speed Correction.sch

Title: Bosch D-Jetronic ECU 0 280 002 005

Size: B	Date: 2020-08-09	**Rev: 1.05**
KiCad E.D.A. kicad (5.1.6)-1		Id: 20/21

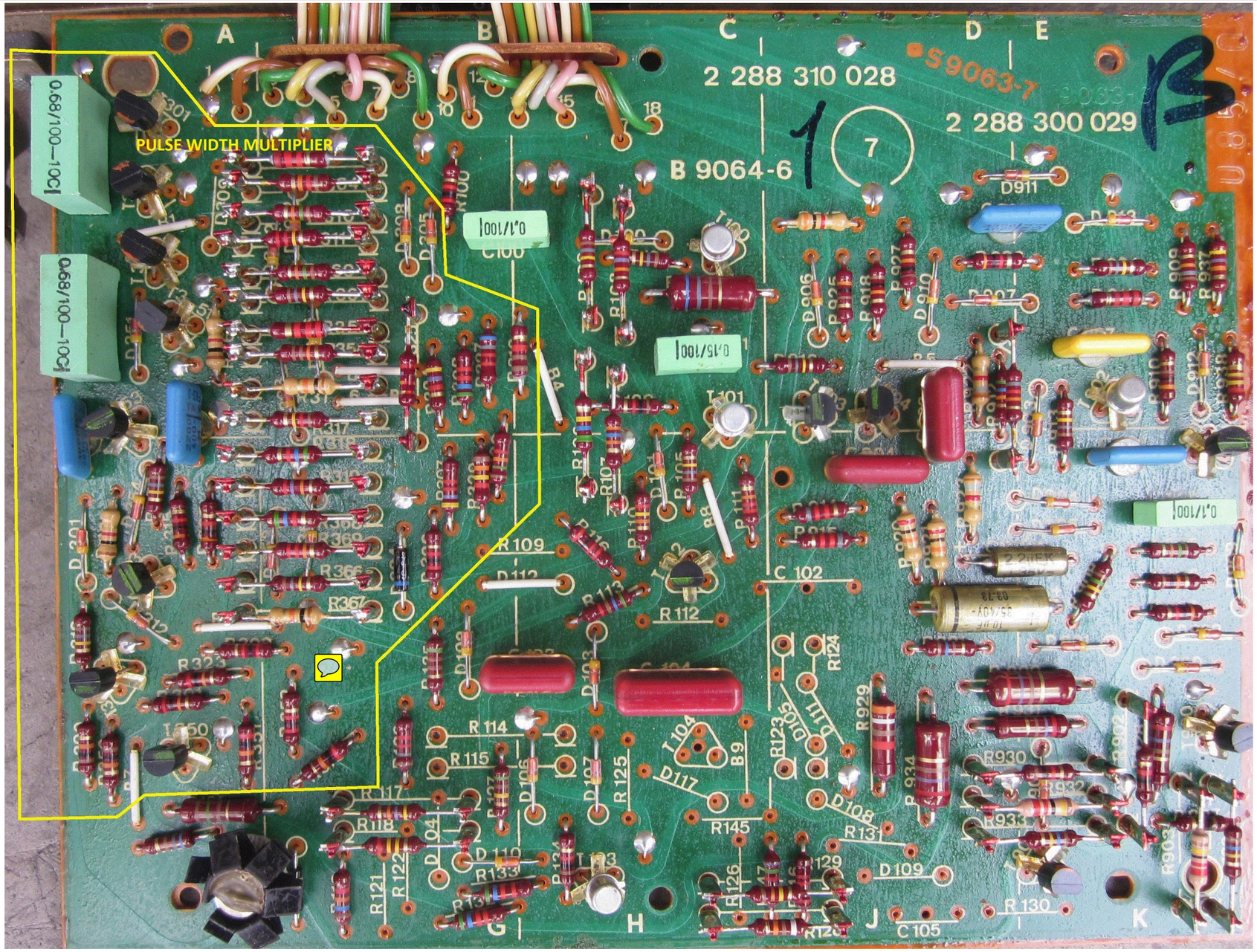

Auxiliary Board – Pulse Width Multiplier
Mercedes-Benz Part # A 000 545 26 32
Bosch Order # 0 280 002 005
M117.982 Engine
Mercedes-Benz

Sheet: /Auxiliary Board 2/300 Pulse Width Multiplier/
File: 300 Pulse Width Multiplier.sch

Title: Bosch D-Jetronic ECU 0 280 002 005

Size: B	Date: 2020-08-09	**Rev: 1.05**
KiCad E.D.A. kicad (5.1.6)-1		Id: 21/21