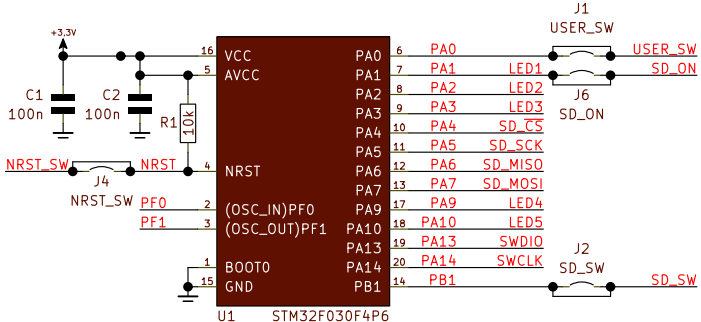
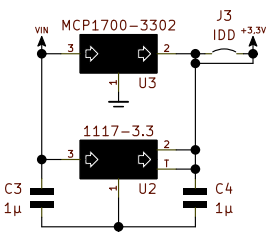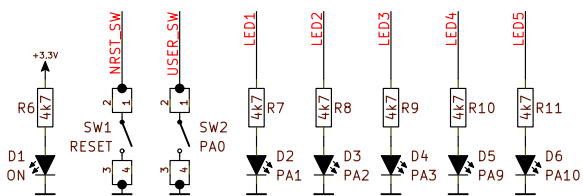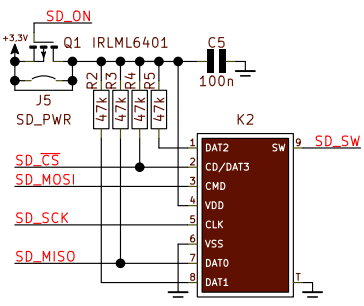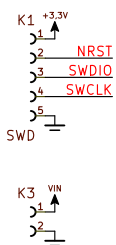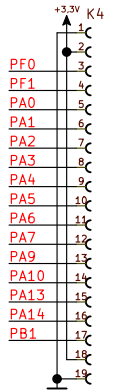
PA0: USART1_CTS, ADC_IN0, RTC_TAMP2, WKUP1
PA1: USART1_RTS, EVENTOUT, ADC_IN1
PA2: USART1_TX, ADC_IN2
PA3: USART1_RX, ADC_IN3
PA4: SPI1_NSS, USART1_CK, TIM14_CH1, ADC_IN4
PA5: SPI1_SCK, ADC_IN5
PA6: SPI1_MISO, TIM3_CH1, TIM1_BKIN, TIM16_CH1, EVENTOUT, ADC_IN6
PA7: SPI1_MOSI, TIM3_CH2, TIM14_CH1, TIM1_CH1N, TIM17_CH1, EVENTOUT, ADC_IN7
PA9: USART1_TX, TIM1_CH2, I2C1_SCL
PA10: USART1_RX, TIM1_CH3, TIM17_BKIN, I2C1_SDA
PA13: SWDIO, IR_OUT
PA14: SWCLK, USART1_TX
PB1: TIM3_CH4, TIM14_CH1, TIM1_CH3N, ADC_IN9
PF0: OSC_IN
PF1: OSC_OUT