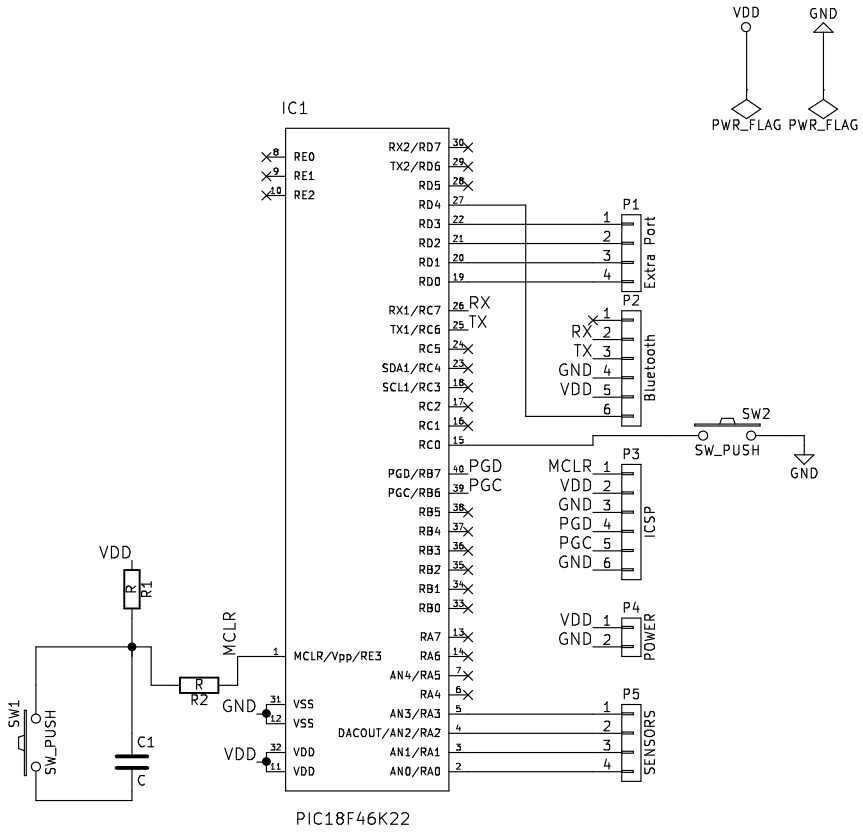

Sheet: /
File: Mini_Project_RT.sch

Title: Reading Table

Size: A4	Date:	Rev:
KiCad E.D.A. eeschema 4.0.2-4+622538ubuntu15.10.1-stable		Id: 1/1