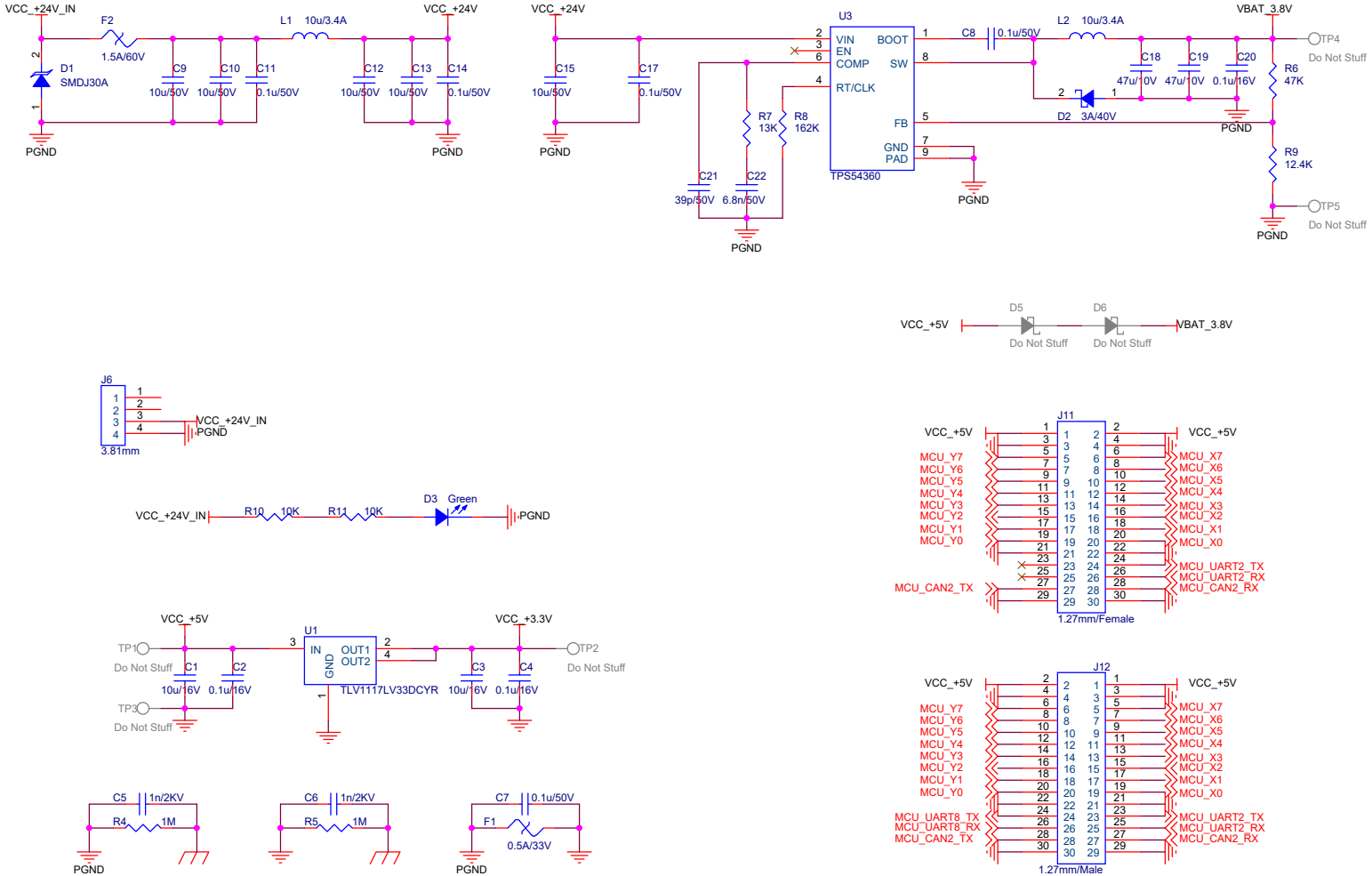

Title	<Title>	
Size A3	Document Number <Doc>	Rev <RevCod
Date: Friday, December 24, 2021	Sheet 1 of 2	

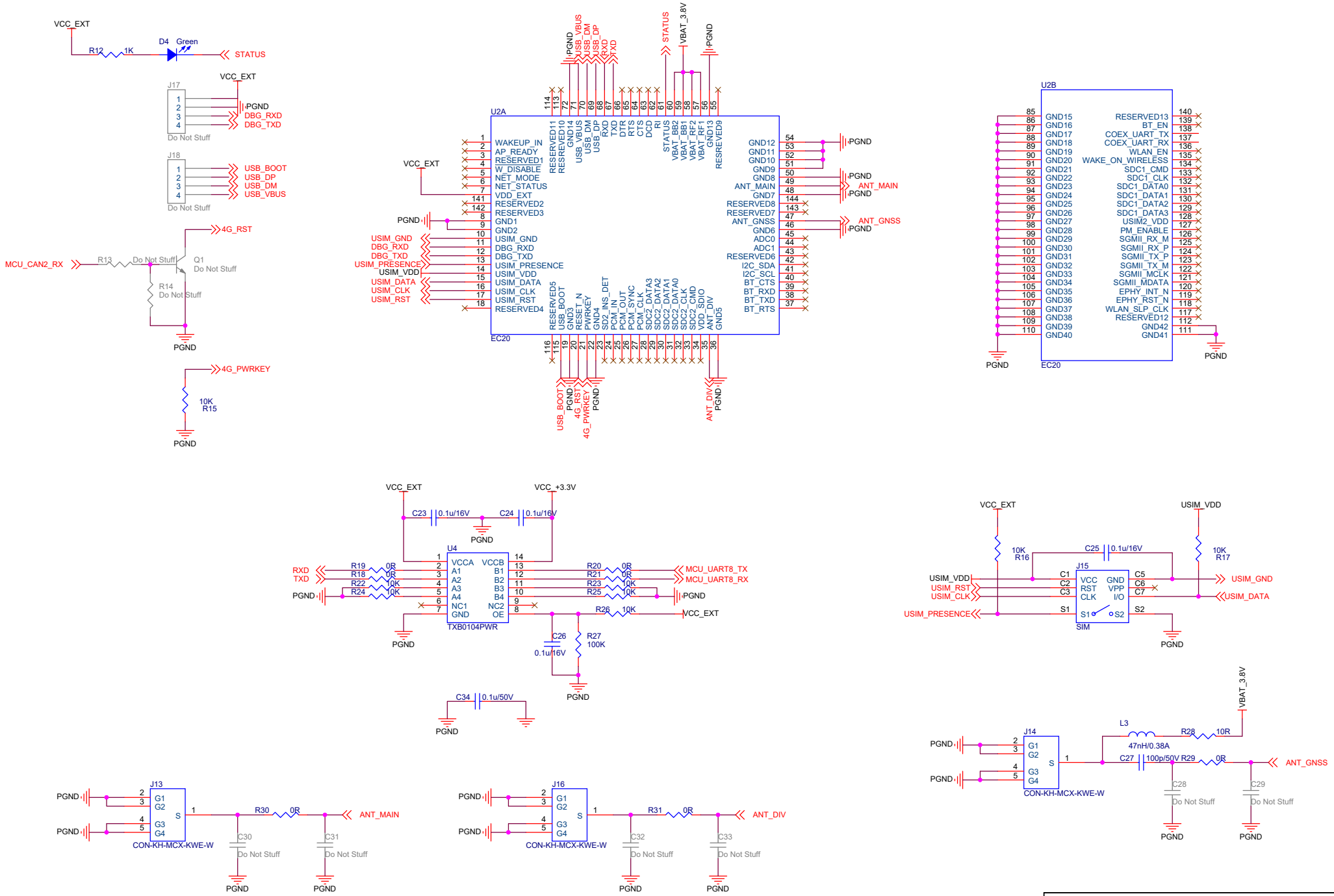

Title	<Title>
Size A3	Document Number <Doc>
Rev	<RevCod
Date: Thursday, December 23, 2021	Sheet 2 of 2