DRONE AND UNMANNED AERIAL VEHICLES

SKYLINE Aerospace

Internship (Batch-03)

SKYLINE

Intermediate Tasks

Submitted by Ajumal

Submitted By:

Ajumal Shamsudeen
ajmalpro11@gmail.com

Intermediate Task_1 - 20/08/2025

5 Different types of Drones/ UAV's

UAV	Characteristics
1. DJI Phantom 4 Pro (Commercial Drone)	• **Size & Weight:** Small UAV (1.4 kg) • **Range & Endurance:** Close range (7 km, 30 mins) • **Level of Autonomy:** Level 2 (semi-autonomous – GPS navigation, obstacle sensing, return-to-home) • **Wing System:** Multi-rotor (quadrotor)
2. General Atomics MQ-9 Reaper (Military Combat UAV)	• **Size & Weight:** Large UAV (4,900 kg MTOW) • **Range & Endurance:** Endurance UAV (>1,850 km, 27 hrs) • **Level of Autonomy:** Level 3 (remote piloting + autonomous navigation & sensor integration) • **Wing System:** Fixed-wing
3.Northrop Grumman RQ-4 Global Hawk (Military Recon UAV)	• **Size & Weight**: Large UAV (14,600 kg) • **Range & Endurance:** Endurance UAV (>22,000 km, 34 hrs) • **Level of Autonomy:** Level 4 (highly autonomous mission execution, human supervision only) • **Wing System:** Fixed-wing (high altitude, long endurance)
4.Parrot Anafi (Consumer UAV)	• **Size & Weight:** Very Small UAV (320 g) • **Range & Endurance:** Close range (4 km, 25 mins) • **Level of Autonomy:** Level 1–2 (basic autonomy like follow-me + GPS waypoint navigation) • **Wing System**: Multi-rotor
5. DJI Mavic 3 (Prosumer UAV)	• **Size & Weight:** Small UAV (895 g) • **Range & Endurance:** Close range (15 km, 46 mins) • **Level of Autonomy:** Level 2–3 (advanced obstacle avoidance, autonomous return-to-home, limited mission autonomy) • **Wing System:** Multi-rotor

submitted by Ajmal

Intermediate Task_2 - 21/08/2025

Components used in Drone's & UAV's

UAV	Component	Specifications
1. DJI Phantom 4 Pro	Frame/Body	Plastic composite, 350 mm diagonal size
	Propulsion System	4 × brushless DC motors, 9450S propellers
	Battery	Li-Po 4S, 5870 mAh, 15.2 V, ~30 min endurance
	Controller/Autopilot	DJI flight controller with GPS/GLONASS
	Camera/Payload	20 MP, 1-inch CMOS, 4K @ 60 fps
2.MQ-9 Reaper	Airframe	Composite material, 20 m wingspan
	Engine	Honeywell TPE331-10 turboprop, 900 hp
	Fuel Capacity	~1,800 kg, endurance >27 hrs
	Avionics/Autopilot	Satellite (Ku-band), advanced autopilot
	Payload	1,700 kg (sensors + weapons)
	Sensors	MTS-B EO/IR, Lynx radar
	Control System	Ground Control Station with SATCOM
3. Grumman RQ-4 Global Hawk	Airframe	39.9 m wingspan, carbon composite fuselage
	Engine	Rolls-Royce AE 3007H turbofan, 7,600 lbf thrust
	Fuel Capacity	~7,500 kg, ~34 hrs endurance
	Avionics/Autopilot	Fully autonomous with SATCOM link
	Payload	1,360 kg ISR sensors
	Sensors	EO/IR, SAR radar, SIGINT
	Communication	Satellite + line-of-sight datalink
4. Parrot Anafi	Frame/Body	Carbon-fiber reinforced plastic, foldable arms
	Propulsion System	4 × brushless motors, 3-blade props
	Battery	Li-Po 2S, 2700 mAh, 7.6 V, ~25 min flight
	Controller	SkyController 3, Wi-Fi (4 km range)
	Camera/Payload	21 MP Sony sensor, 4K HDR video, 180° tilt gimbal
	GPS/Autonomy	GNSS (GPS+GLONASS), basic waypoint navigation
5. DJI Mavic 3	Frame/Body	Magnesium alloy + composite, foldable arms
	Propulsion System	4 × brushless DC motors, foldable propellers
	Battery	Li-Po 4S, 5000 mAh, 77 Wh, ~46 min flight
	Controller	DJI RC-N1 with O3+ transmission, 15 km range
	Camera/Payload	Dual Camera (20 MP Hasselblad + Telephoto), 5.1K video
	GPS/Navigation	GPS + Galileo + BeiDou
	Sensors	Omnidirectional obstacle avoidance (APAS 5.0)

Submitted by Anamal

Weekly Task 1- 25/08/2025

(2)

1) $Re = \frac{\rho v d}{\mu}$ Given $\rho = 1.2\ kg/m^3$

$\mu = 1.8 \times 10^{-5}\ kg/ms$

$V = 20\ m/s$

$d = l = 0.3\ m$

$= \frac{1.2 \times 20 \times 0.3}{1.8 \times 10^{-5}}$

$= 4 \times 10^5$

$\rightarrow$ Laminar flow (but close to transition.

$Re < 5 \times 10^5$ laminar

$Re > 5 \times 10^5$ turbulent

2) To calculate lift force

$C = 1m$ $F_L = ?$ $A = C \times l = 1 \times 1 = 1m^2$

$\alpha = 5°$ $\rho = \rho_{air} = 1.2\ kg/m^3$

$V = 20\ m/s$ $F_L = \frac{1}{2} \rho A V^2 \times C_L$

$C_L = 0.6$ $= \frac{1}{2} \times 1.2 \times 1 \times (20)^2 \times 0.6$

$= 144\ N$

Intermediate Task_3 - 27/08/2025

Consider a quadrotor UAV with four rotors. The front and rear rotors rotate counter-clockwise, while the left and right rotors rotate clockwise. The quadrotor is hovering at a constant altitude, and the total thrust produced by the four rotors is 50 Newtons. If the rotational speed of the front and rear rotors is 3000 RPM (revolutions per minute) and the rotational speed of the lateral rotors is 2500 RPM, calculate the resulting yaw rotation of the quadrotor UAV.

Sol^n:

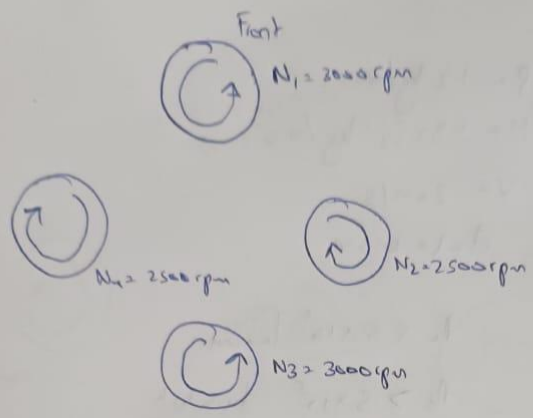

a)

$$\omega_{3000} = \frac{2\pi \times 3000}{60} = 314.15 \text{ rad/sec}$$

$$\omega_{2500} = \frac{2\pi \times 2500}{60} = 261.79 \text{ rad/sec}$$

b) Thrust coefficient (K_T)

$$T_i = K_T \omega_i^2$$

$$50 = 2 K_T \omega_{3000}^2 + 2 K_T \omega_{2500}^2$$

$$\therefore K_T \approx 1.495 \times 10^{-7} \text{ N}$$

c) Yaw Torque model,

drag torque of each rotor,

$$Q_i = k_Q \omega_i^2$$

$$\tau_\gamma = k_Q \left(\sum_{ccw} \omega_i^2 - \sum_{cw} \omega_i^2 \right)$$

$$\tau_\gamma = k_Q \left(2(314.15)^2 - 2 \times (261.79)^2 \right)$$

$$\tau_\gamma = 60314.25 \, k_Q$$

The Quadrotor will Yaw clockwise, as CCW rotors are faster, their drag torque is larger.

<u>Relative magnitude of imbalance</u>

$$\frac{\Sigma_{CCW}\,\omega^2 - \Sigma_{CW}\,\omega^2}{\Sigma_{all}\,\omega^2} = \frac{60314.25}{2\omega_{3000}^2 + 2\omega_{2500}^2} \cong \underline{\underline{18\%}}$$

$\therefore$ 18% torque imbalance

Intermediate Task - 02/09/2025
Solidworks Drawing

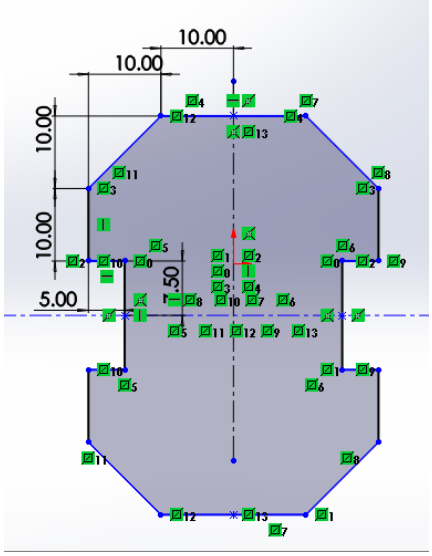

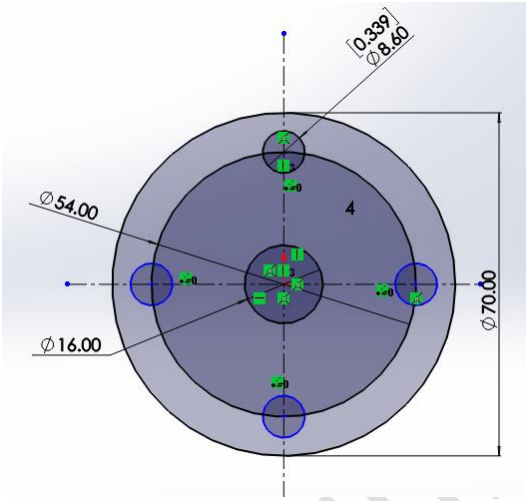

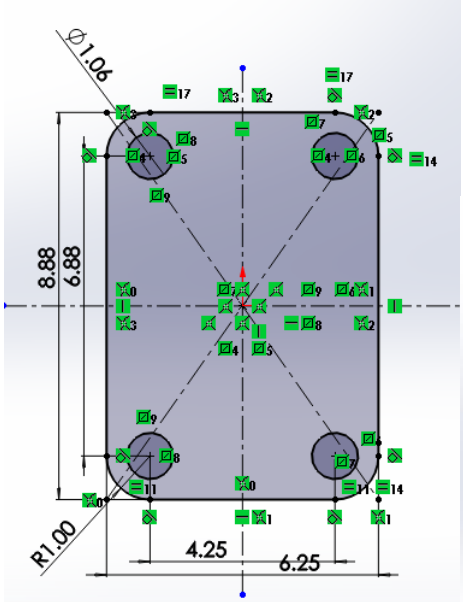

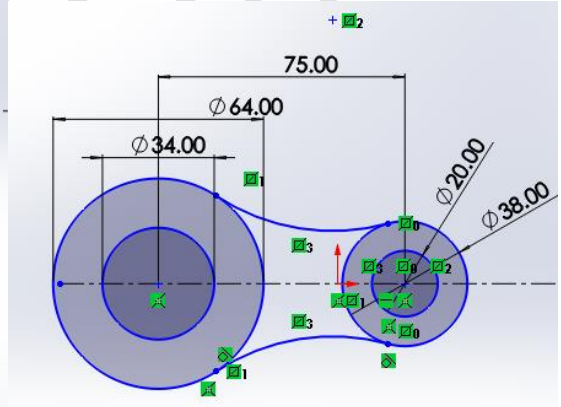

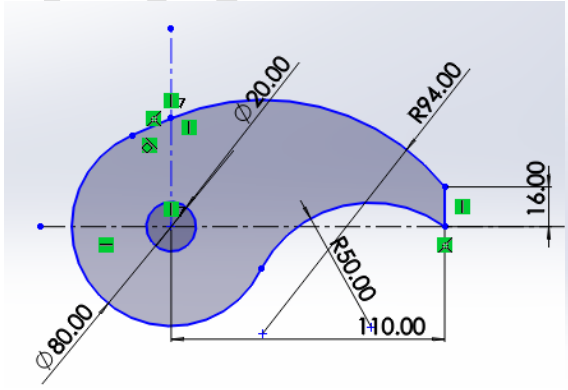

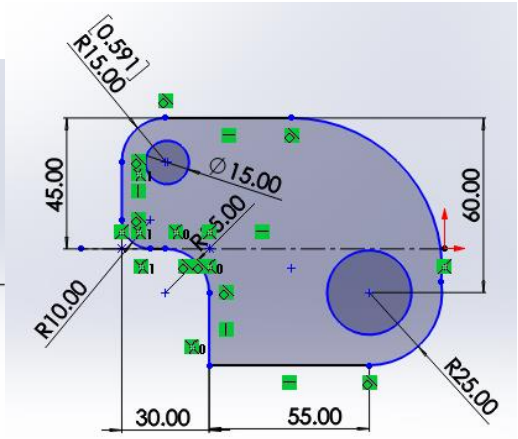

Guide by Ajay

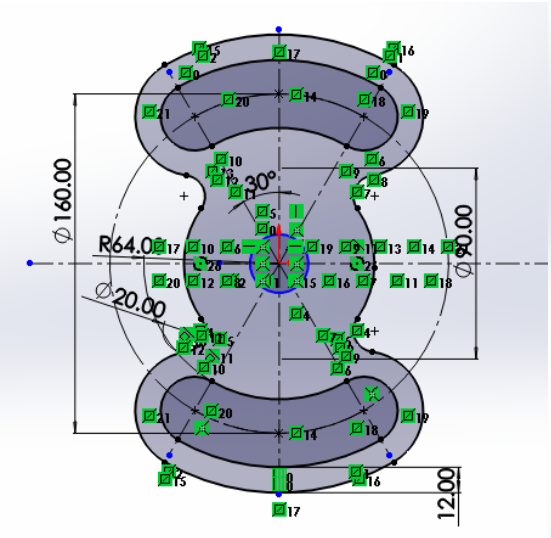

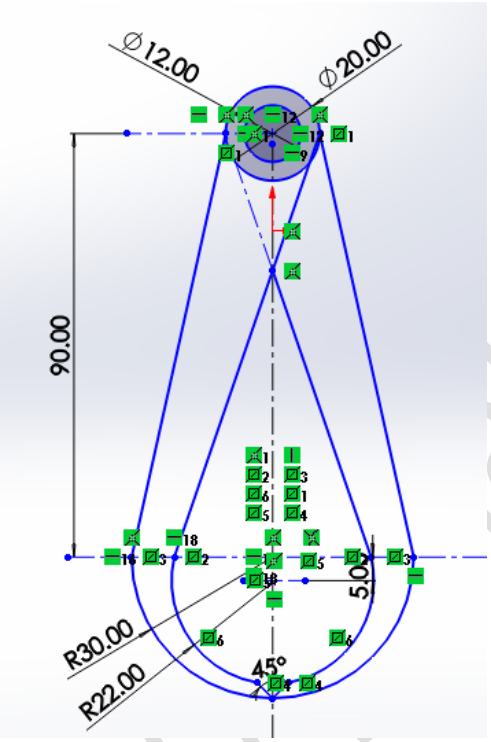

Submitted by

Weekly Task - 02/09/2025
Solidworks 3D

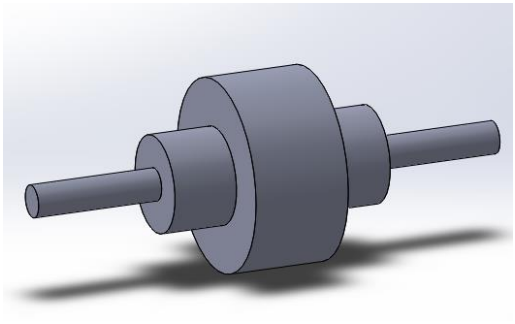

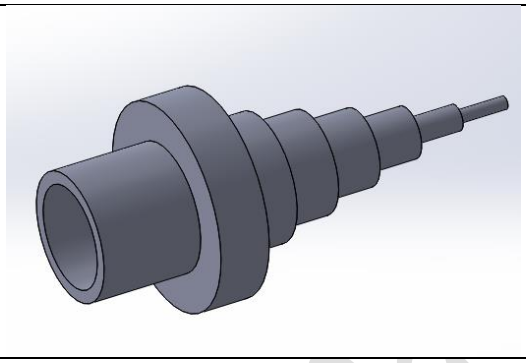

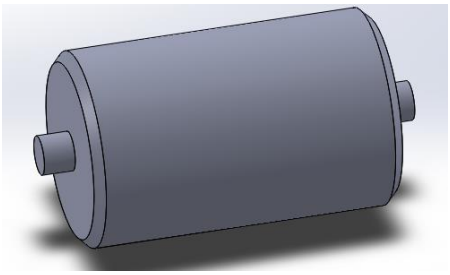

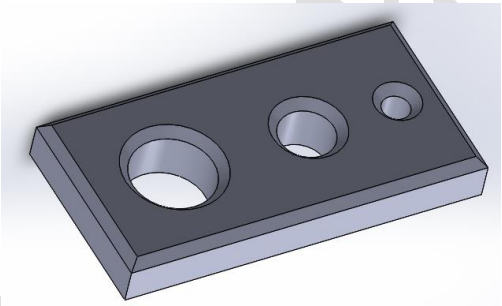

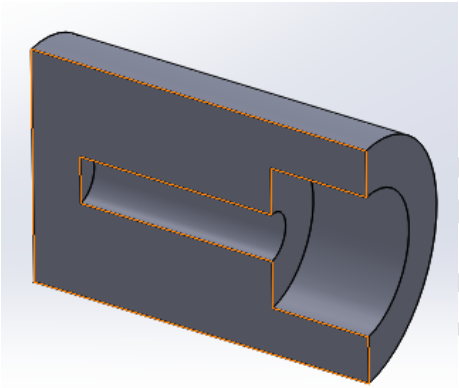

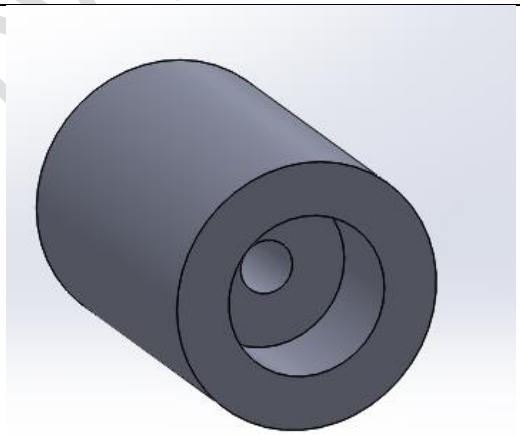

Submitted by

Intermediate Task - 07/09/2025
Quad copter Parts

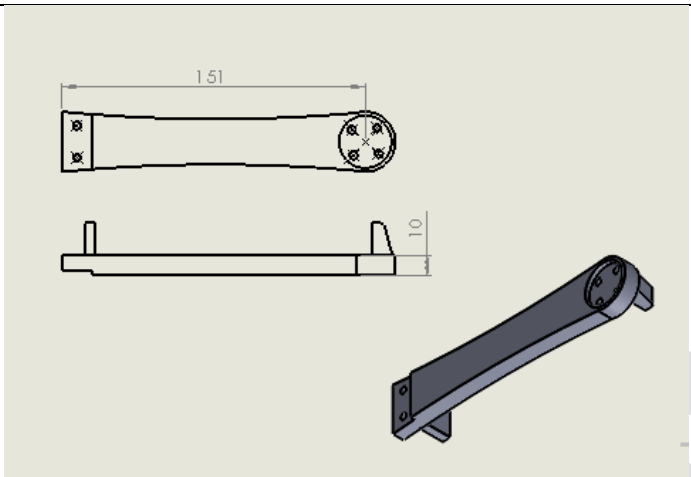

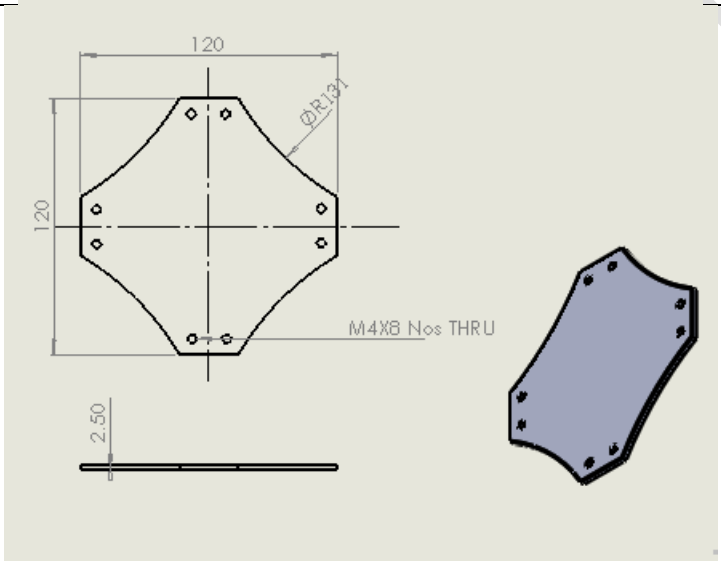

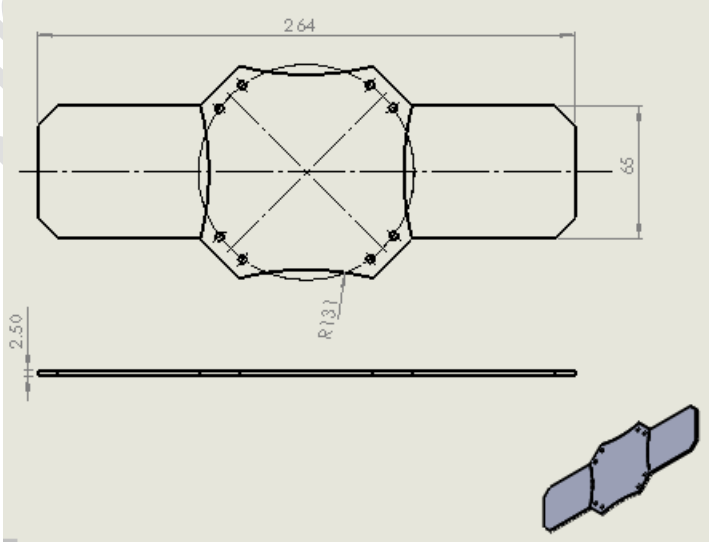

Submitted

Intermediate Task - 07/09/2025
Quad copter Assembly

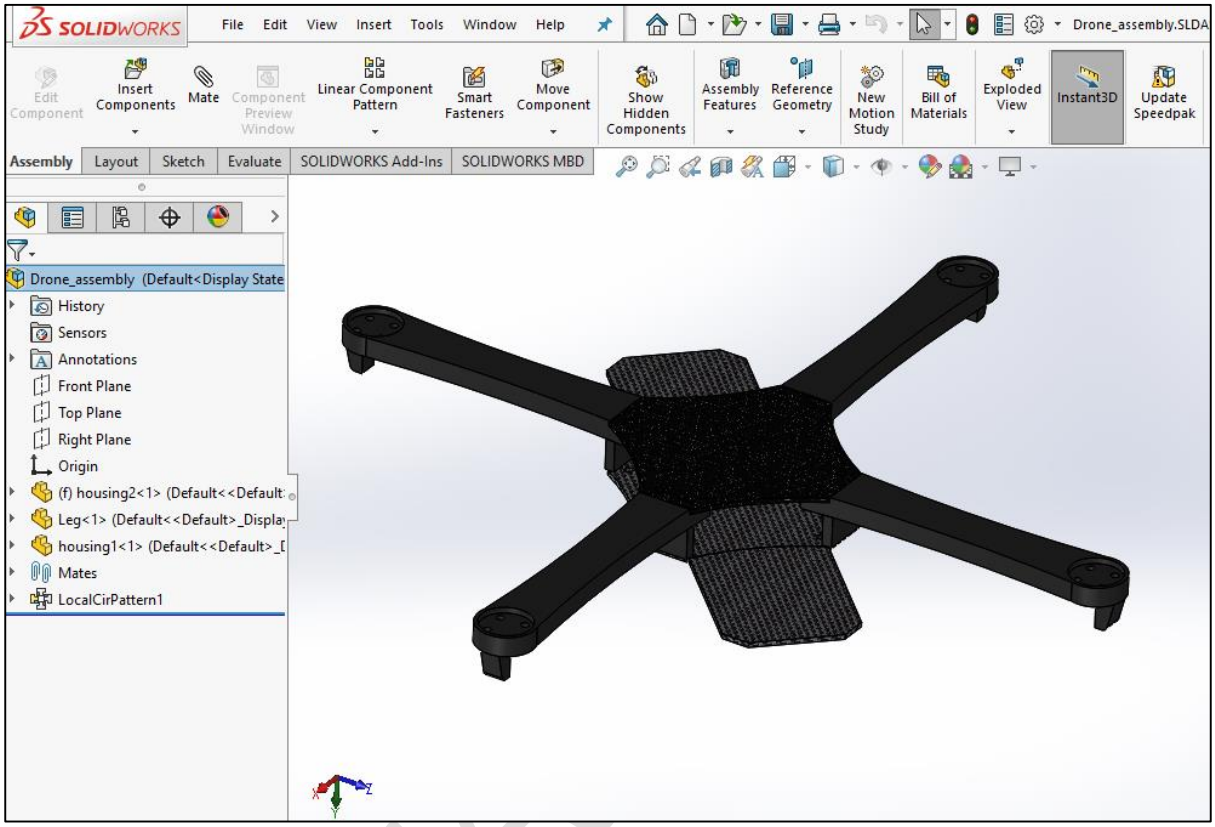

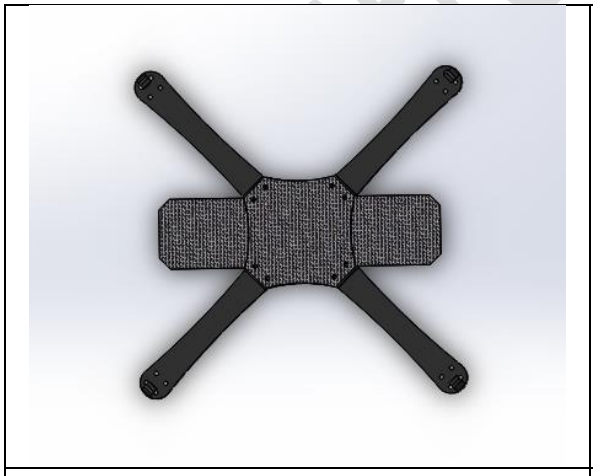	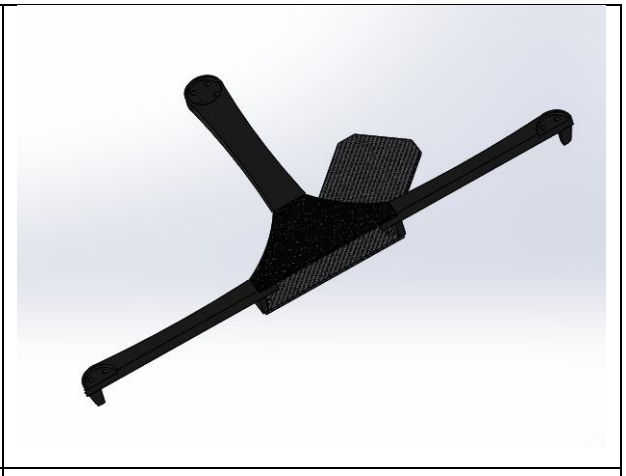
Rear View	Section View

Weekly Assessment - 09/09/2025
Final Assembly with Initial model comparison

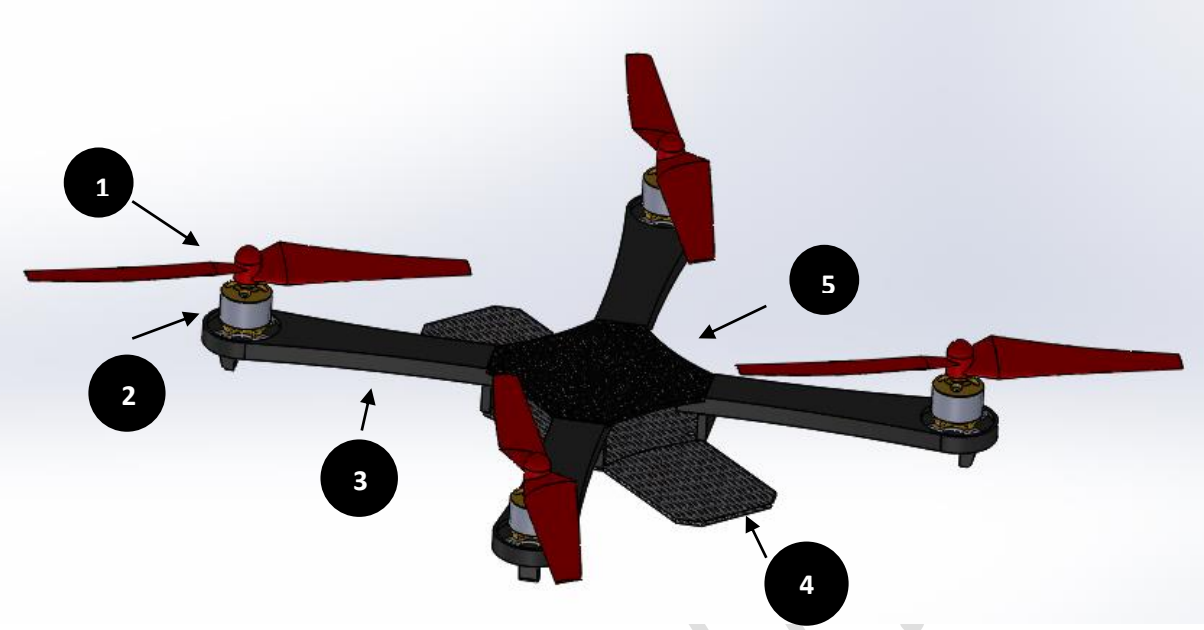

Initial Model

No	Part	Qty	Material	Weight (Kg)
1	Propeller	4	ABS	0.08
2	BLDC Motor	4	Other	0.256
3	Leg	4	PBT General	0.28
4	Bottom Housing	1	PE Low Density	0.045
5	Top Cover	1	PBTP	0.03
			Total Weight	**0.691 Kg**

Propeller Aerofoil Configuration

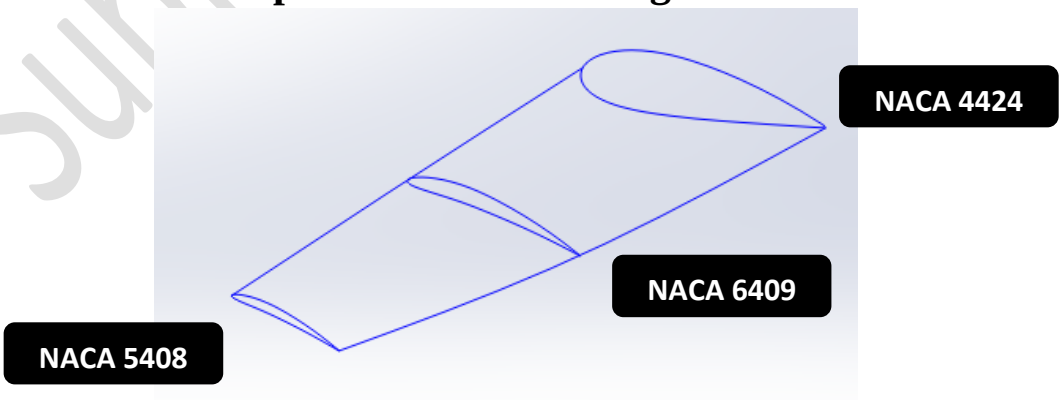

Submitted by

The individual leg weight has been reduced to 0.05 Kg , Therefor the four legs becomes 0.2 Kg. Total Weight of the drone becomes 0.611. Hence, A total reduction of 11% overall.

- <u>The overall drone weight can be brought down to one-third of the initial weight by:</u>
  - Removing excess material from non-critical regions of components.
  - Using lightweight composite materials such as CFRP or GFRP in place of conventional ones.
- The methods to achieve this optimization are known, but due to the limited days of my vacation, I could not explore the complete optimization process.
- As a partial step, only the drone leg portion was optimized by removing excess material, resulting in some reduction in weight while maintaining functionality.

Submitted