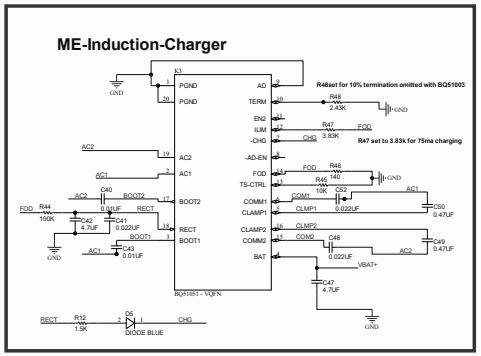

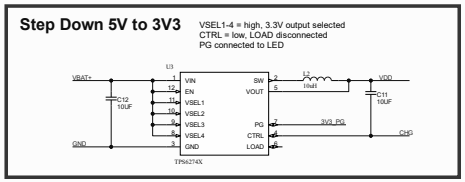

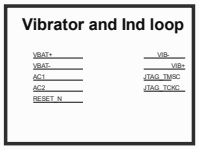

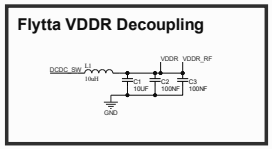

MX25L3206EZNI-12G/WSON-8

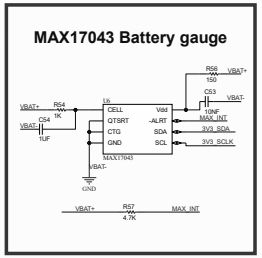

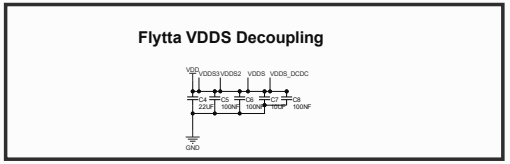

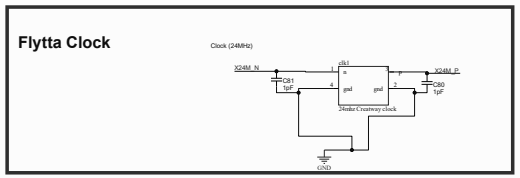

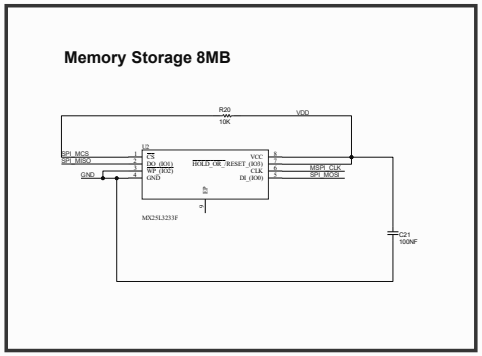

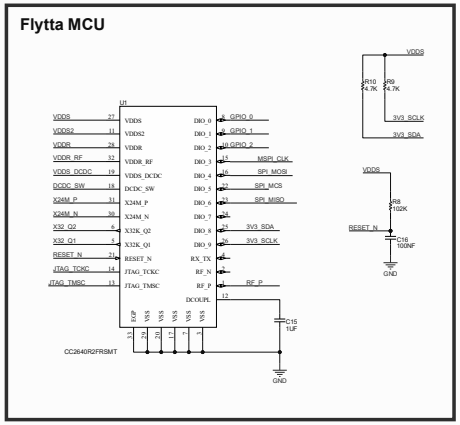

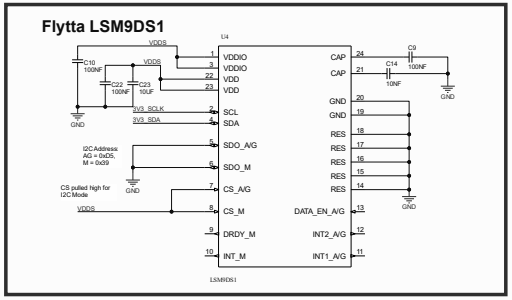

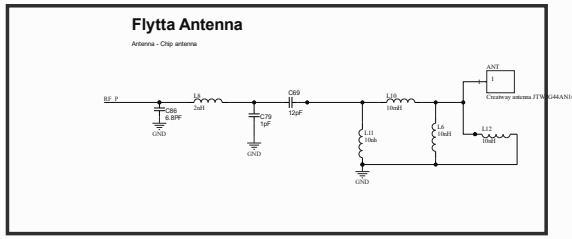

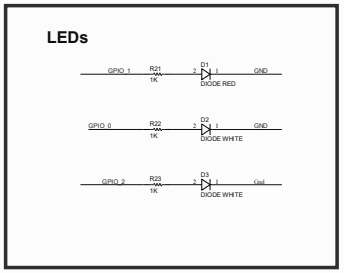

Title		
Size A1	Number	Revision
Date: 11/14/2020		Sheet of
File: C:\Users...\Flytta-33.SchDoc		Drawn By: