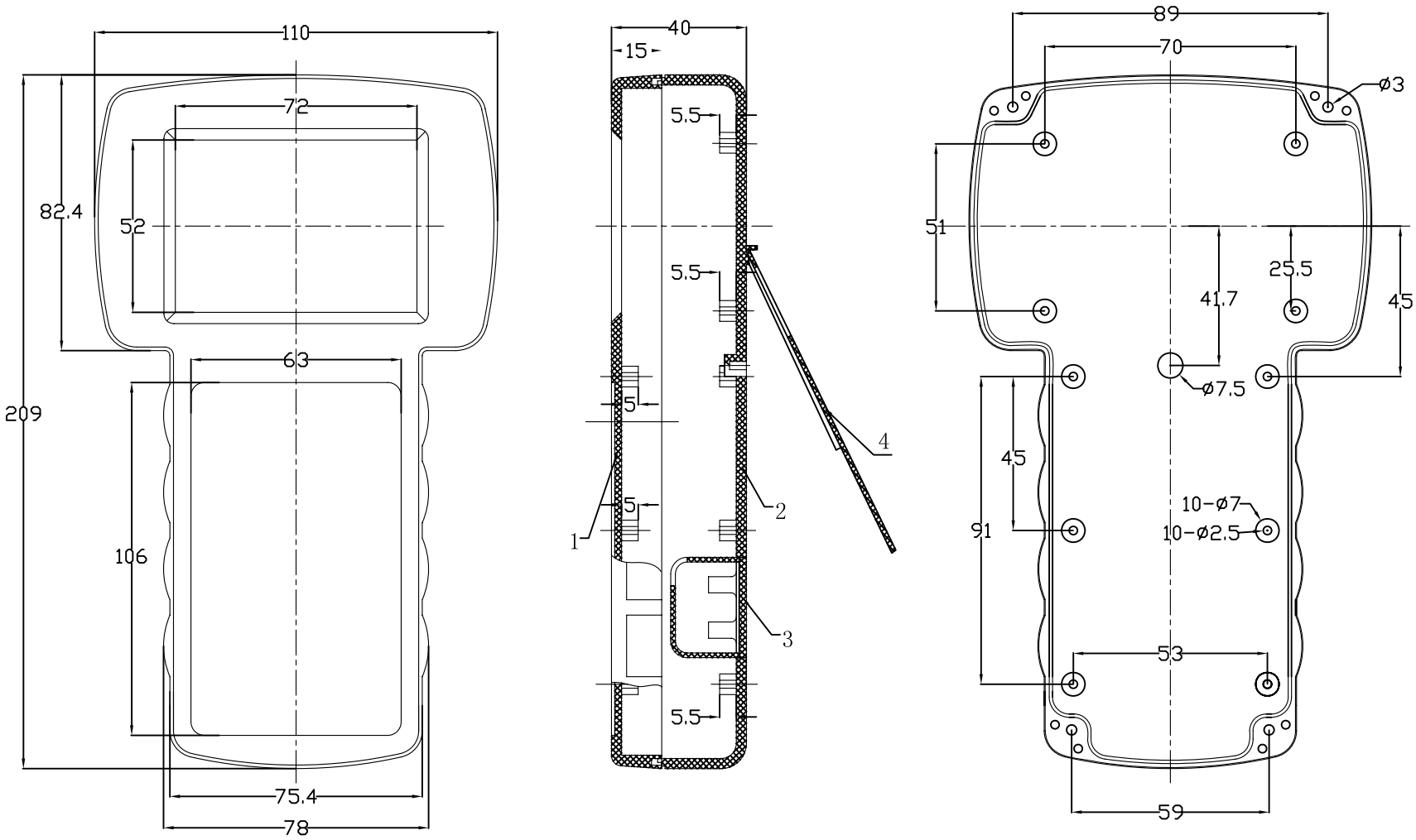
110
72
82.4
52
63
209
106
75.4
78
40
15
5.5
5.5
5
5
5.5
1
2
3
4
89
70
ø3
51
25.5
41.7
45
ø7.5
45
91
10-ø7
10-ø2.5
53
59