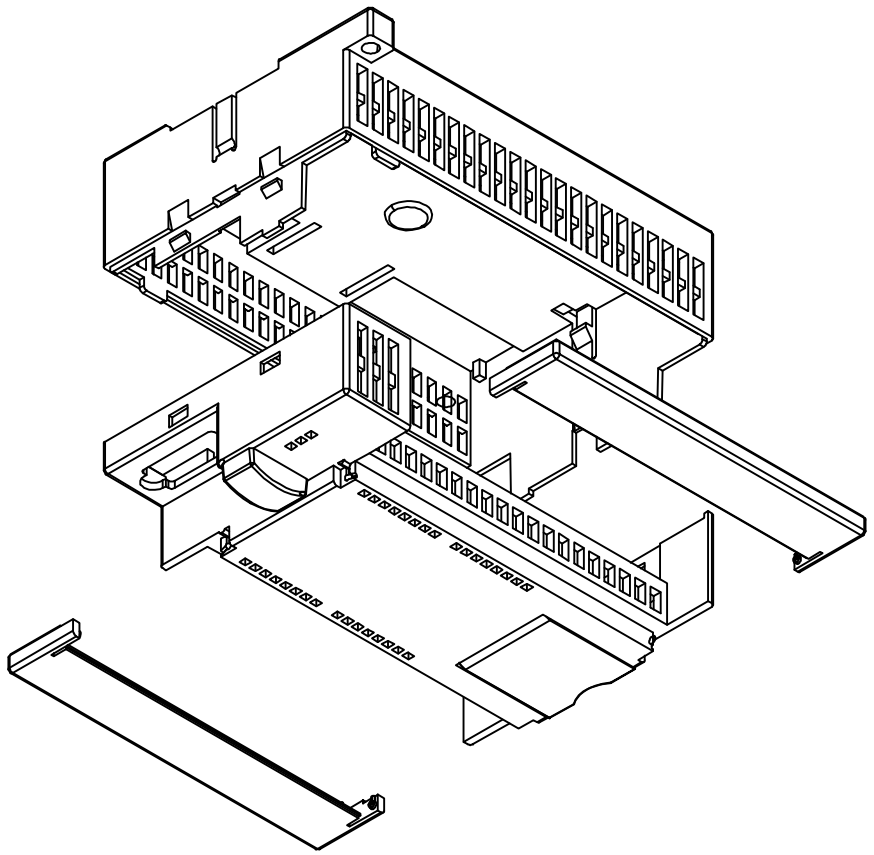

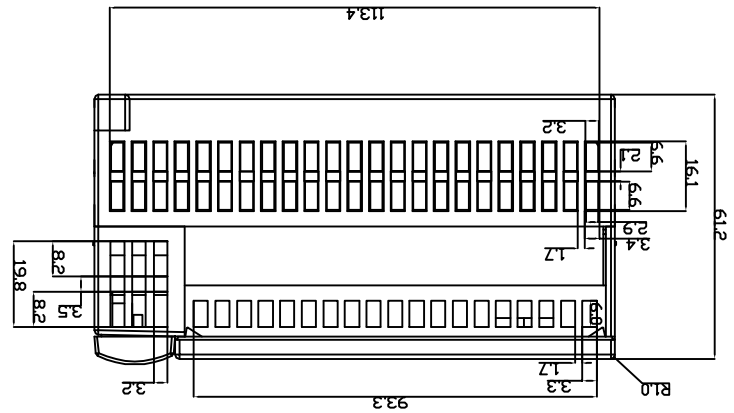
113.4
61.2
16.1
5.6
2.1
9.9
4.9
3.0
1.7
R1.0
3.3
1.7
93.3
3.2
3.2
5.1
8.2
19.8
8.2
2.8
6.9

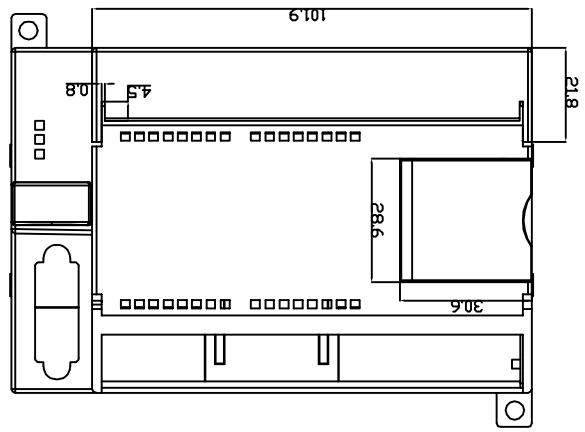
101.9
21.8
0.8
4.5
28.6
30.6

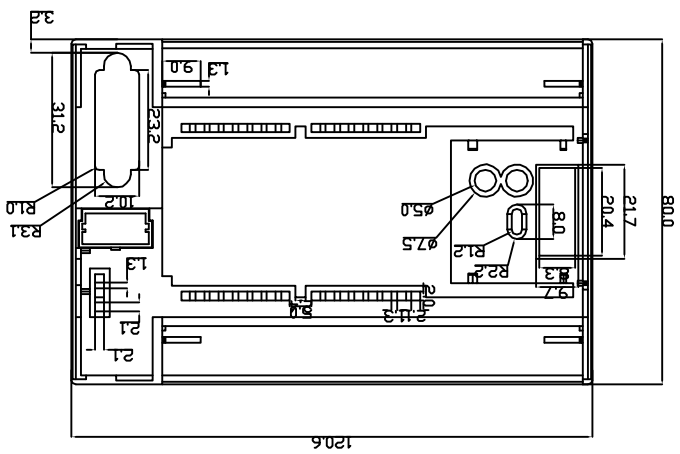
80.0
21.7
20.4
8.0
Ø0.5
Ø0.7
R2.4
R1.2
R2.4
3.4
2.0
2.1
2.1
1.3
120.6
31.2
23.2
10.2
R3.1
R1.0
1.3
9.0
3.4

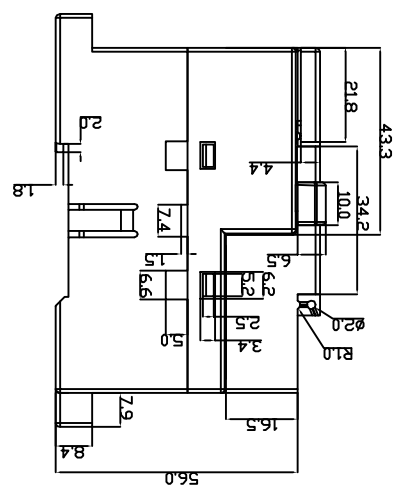
43.3
21.8
2.0
1.8
4.4
34.2
10.0
7.4
1.5
6.5
6.9
2.0
2.5
3.4
5.0
Ø2.0
R1.0
7.9
16.5
8.4
56.0

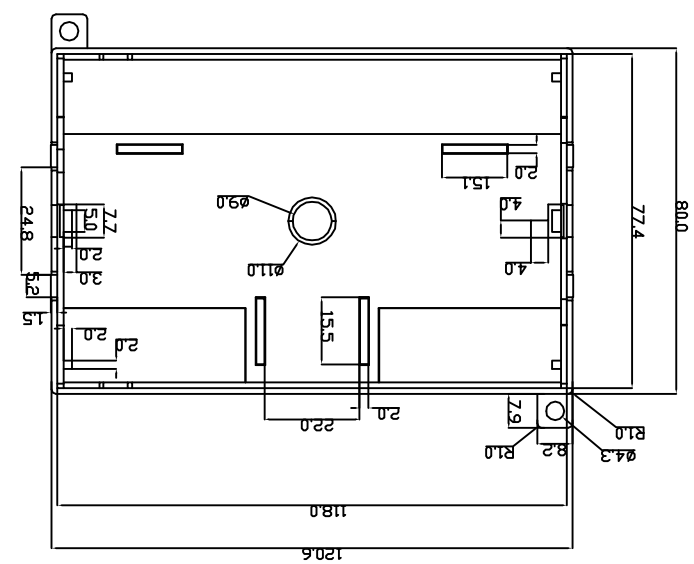
80.0
77.4
2.0
15.1
4.0
4.0
Ø90.0
Ø110.0
15.5
2.0
2.0
3.0
2.0
5.0
7.7
24.8
5.2
1.5
2.0
22.0
7.9
R1.0
8.2
Ø4.3
R1.0
120.6
118.0