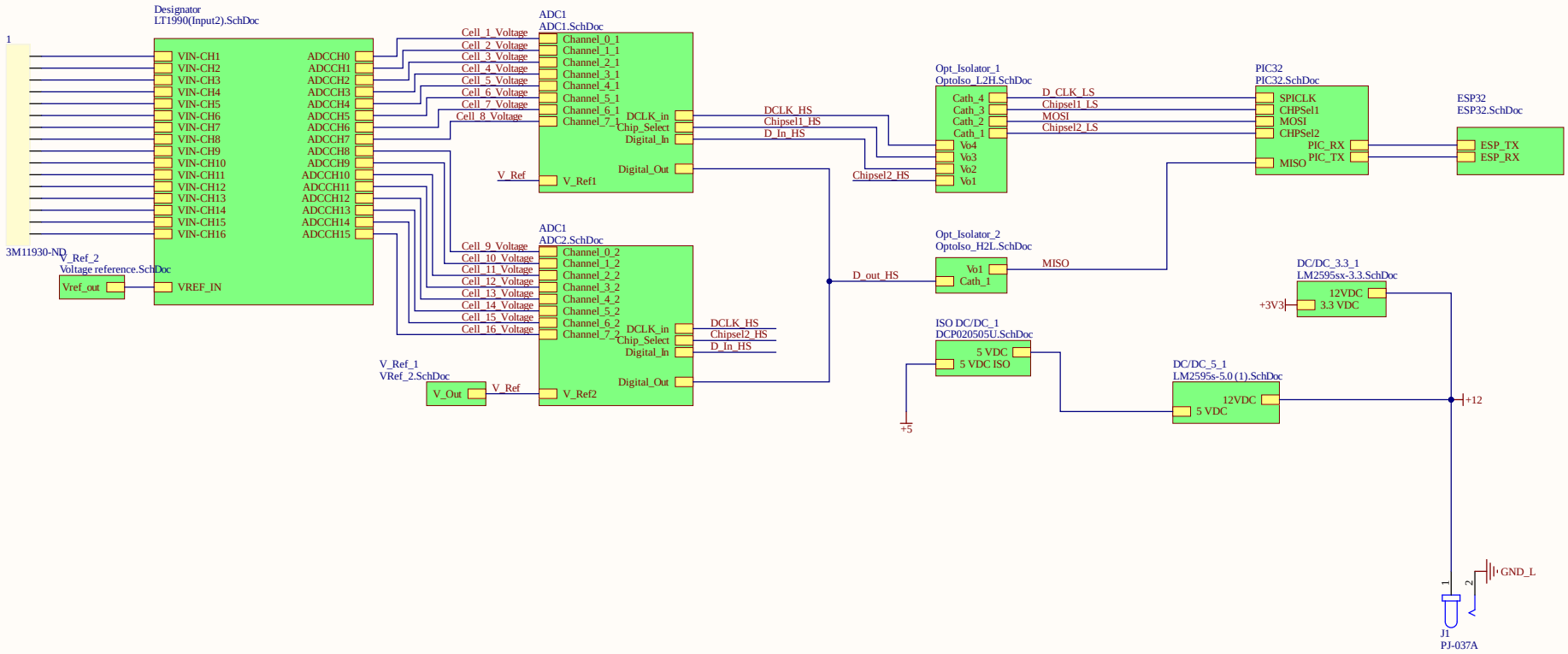
Designator
LT1990(Input2).SchDoc
1
VIN-CH1
VIN-CH2
VIN-CH3
VIN-CH4
VIN-CH5
VIN-CH6
VIN-CH7
VIN-CH8
VIN-CH9
VIN-CH10
VIN-CH11
VIN-CH12
VIN-CH13
VIN-CH14
VIN-CH15
VIN-CH16
ADCCH0
ADCCH1
ADCCH2
ADCCH3
ADCCH4
ADCCH5
ADCCH6
ADCCH7
ADCCH8
ADCCH9
ADCCH10
ADCCH11
ADCCH12
ADCCH13
ADCCH14
ADCCH15
3M11930-ND
V_Ref_2
Voltage reference.SchDoc
Vref_out
VREF_IN
ADC1
ADC1.SchDoc
Cell_1_Voltage
Cell_2_Voltage
Cell_3_Voltage
Cell_4_Voltage
Cell_5_Voltage
Cell_6_Voltage
Cell_7_Voltage
Cell_8_Voltage
Channel_0_1
Channel_1_1
Channel_2_1
Channel_3_1
Channel_4_1
Channel_5_1
Channel_6_1
Channel_7_1
DCLK_in
Chip_Select
Digital_In
Digital_Out
V_Ref
V_Ref1
DCLK_HS
Chipsel1_HS
D_In_HS
Opt_Isolator_1
OptoIso_L2H.SchDoc
Cath_4
Cath_3
Cath_2
Cath_1
Vo4
Vo3
Vo2
Vo1
Chipsel2_HS
D_CLK_LS
Chipsel1_LS
MOSI
Chipsel2_LS
PIC32
PIC32.SchDoc
SPICLK
CHPSel1
MOSI
CHPSel2
PIC_RX
PIC_TX
MISO
ESP32
ESP32.SchDoc
ESP_TX
ESP_RX
ADC1
ADC2.SchDoc
Cell_9_Voltage
Cell_10_Voltage
Cell_11_Voltage
Cell_12_Voltage
Cell_13_Voltage
Cell_14_Voltage
Cell_15_Voltage
Cell_16_Voltage
Channel_0_2
Channel_1_2
Channel_2_2
Channel_3_2
Channel_4_2
Channel_5_2
Channel_6_2
Channel_7_2
V_Ref_1
VRef_2.SchDoc
V_Out
V_Ref2
D_out_HS
Opt_Isolator_2
OptoIso_H2L.SchDoc
Vo1
Cath_1
MISO
ISO DC/DC_1
DCP020505U.SchDoc
5 VDC
5 VDC ISO
+5
DC/DC_3.3_1
LM2595sx-3.3.SchDoc
12VDC
3.3 VDC
+3V3
DC/DC_5_1
LM2595s-5.0 (1).SchDoc
12VDC
5 VDC
+12
GND_L
J1
PJ-037A
Title
Size
B
Number
Revision
Date: 2/17/2023
Sheet of
File: C:\Users\..\Fuel Cell Schematic.SchDoc
Drawn By:

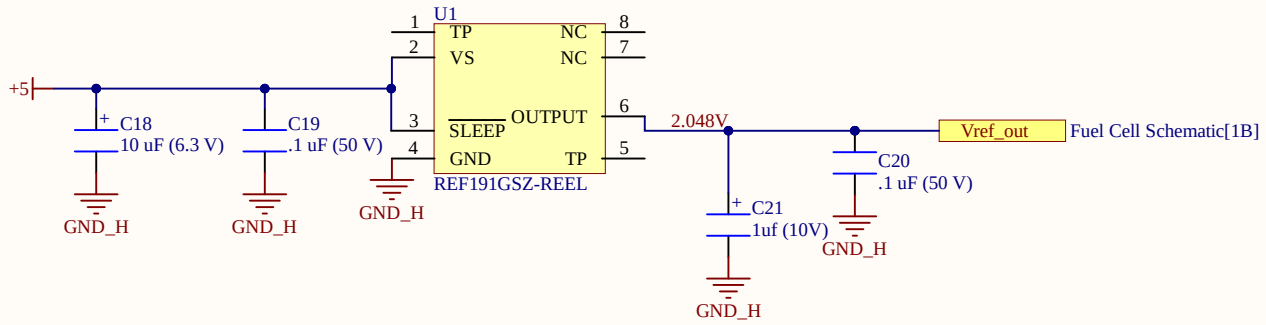

Title		
Size: A	Number	Revision
Date: 2/17/2023		Sheet of
File: C:\Users\..\Voltage reference.SchDoc		Drawn By:

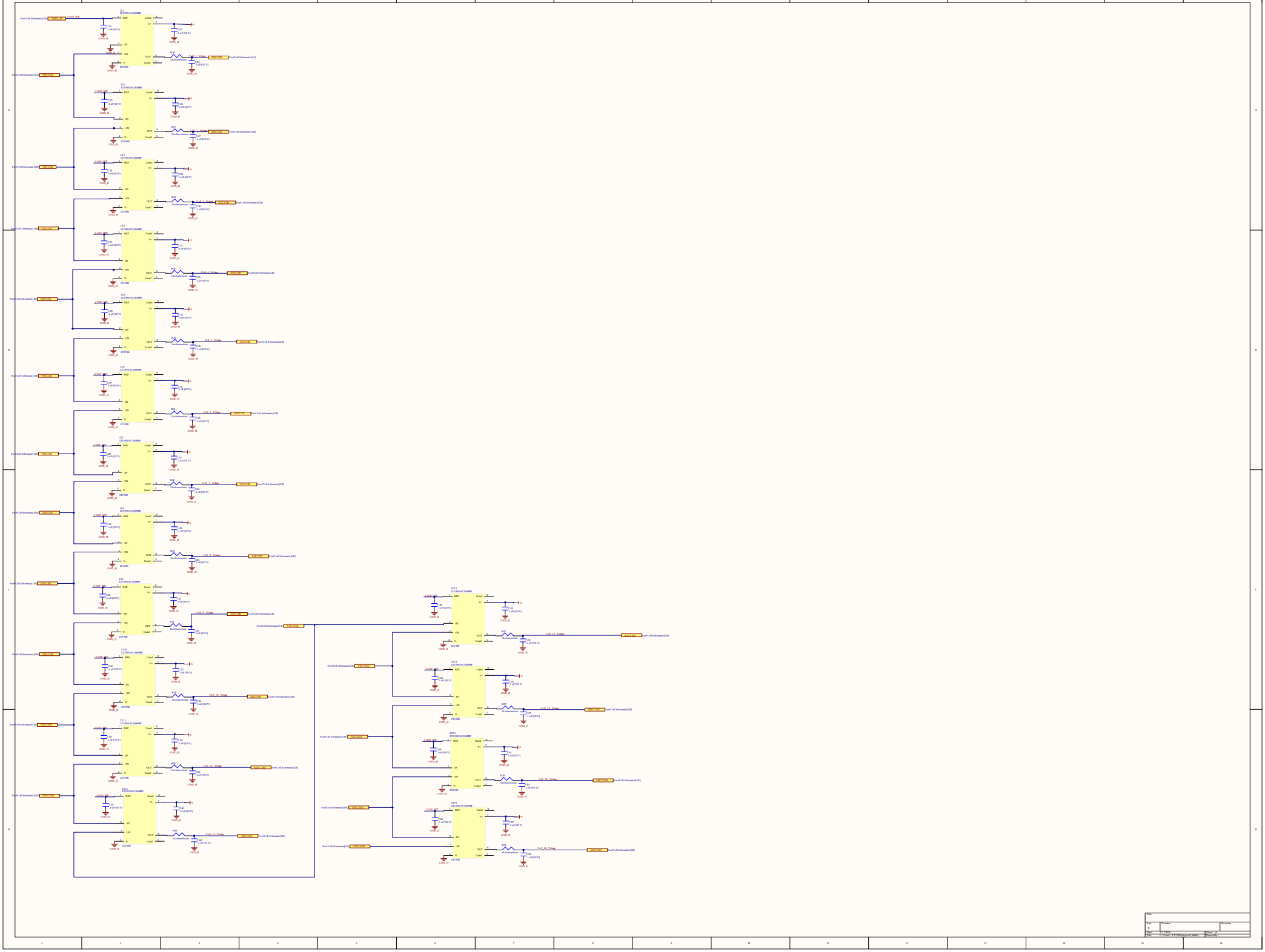

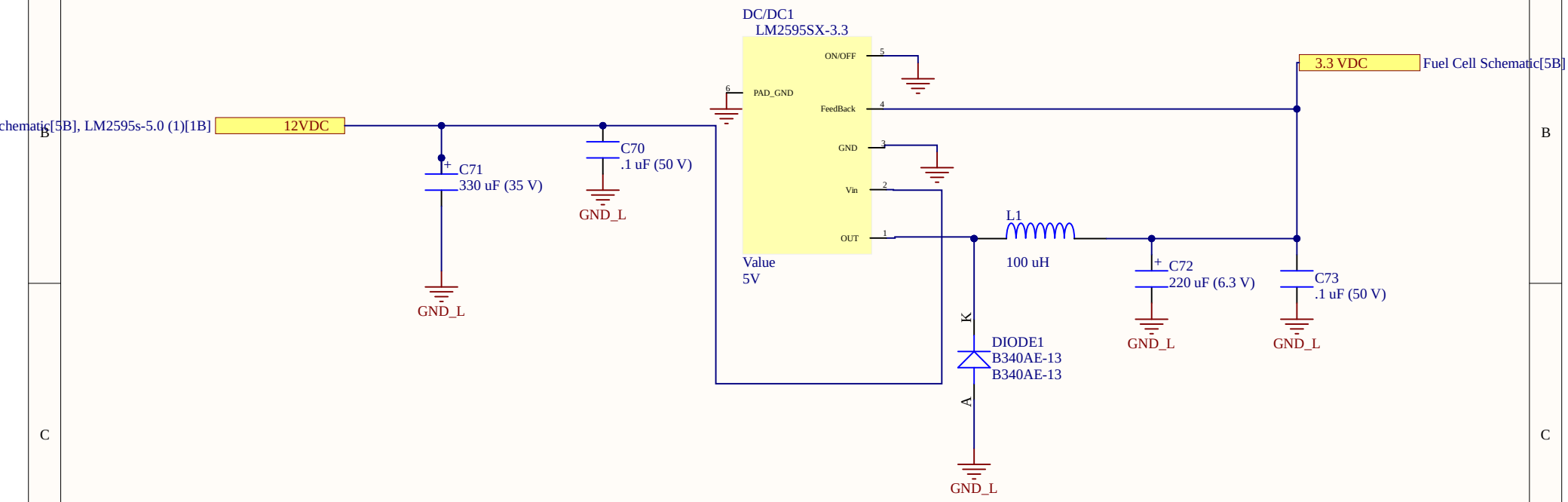

Title		
Size: A	Number	Revision
Date: 2/17/2023		Sheet of
File: C:\Users\..\LM2595sx-3.3.SchDoc		Drawn By:

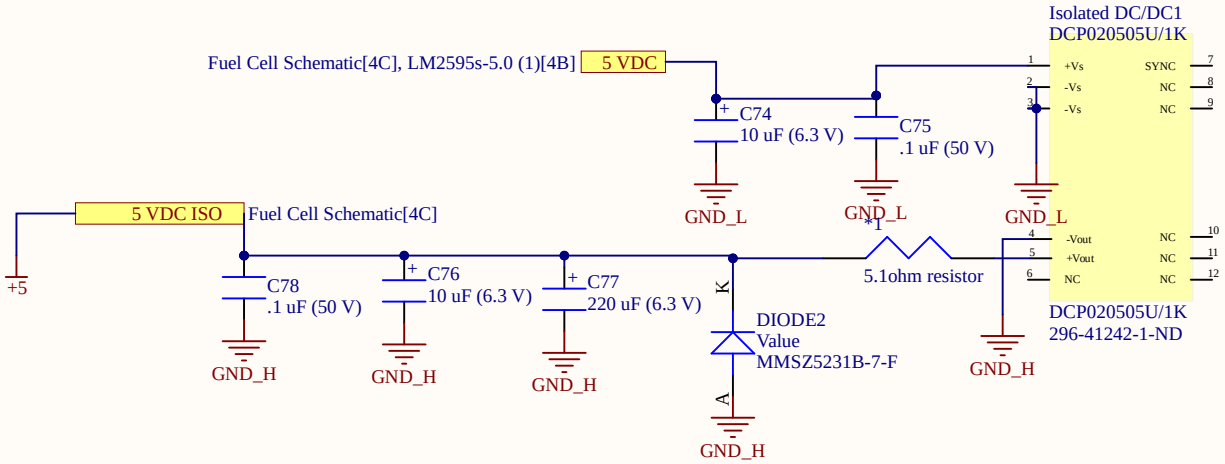

Title		
Size: A	Number	Revision
Date: 2/17/2023		Sheet of
File: C:\Users\..\DCP020505U.SchDoc		Drawn By:

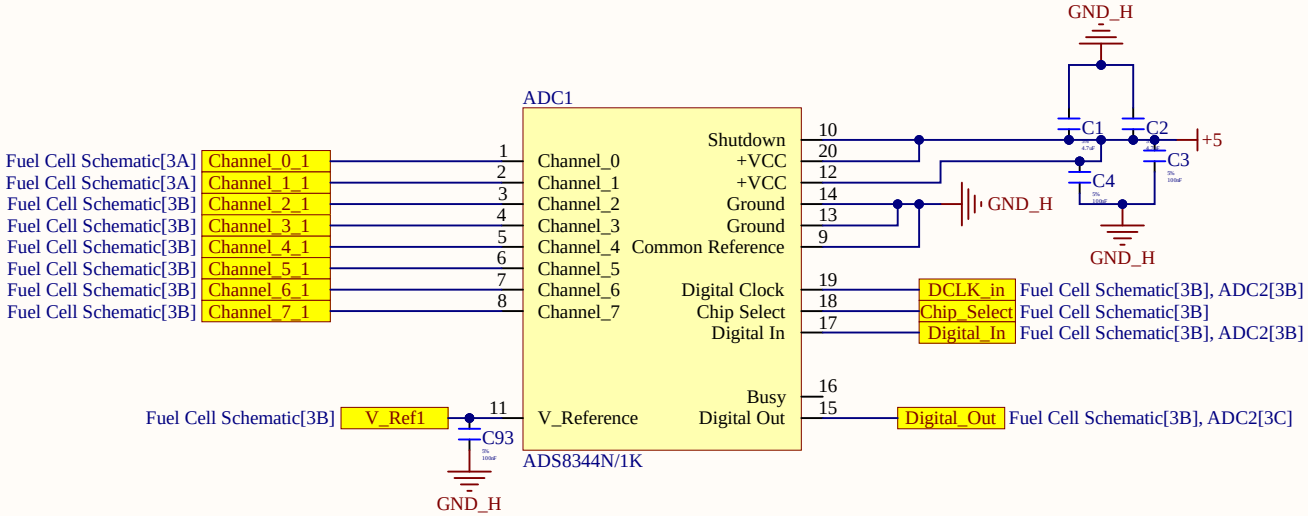

Title		
Size A	Number	Revision
Date: 2/17/2023		Sheet of
File: C:\Users\..\ADC1.SchDoc		Drawn By:

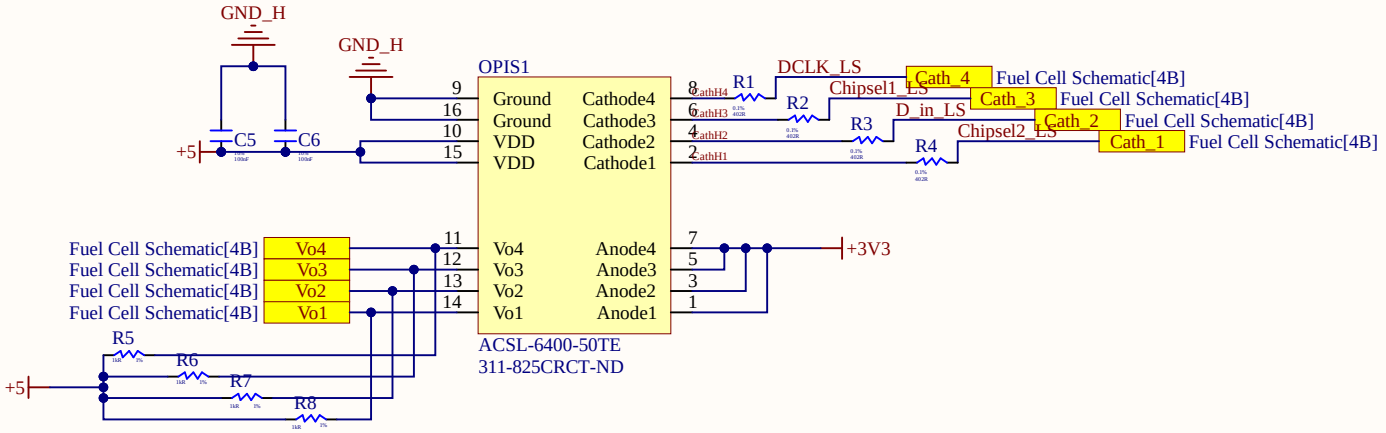

Title		
Size: A	Number	Revision
Date: 2/17/2023		Sheet of
File: C:\Users\..\OptoIso_L2H.SchDoc		Drawn By:

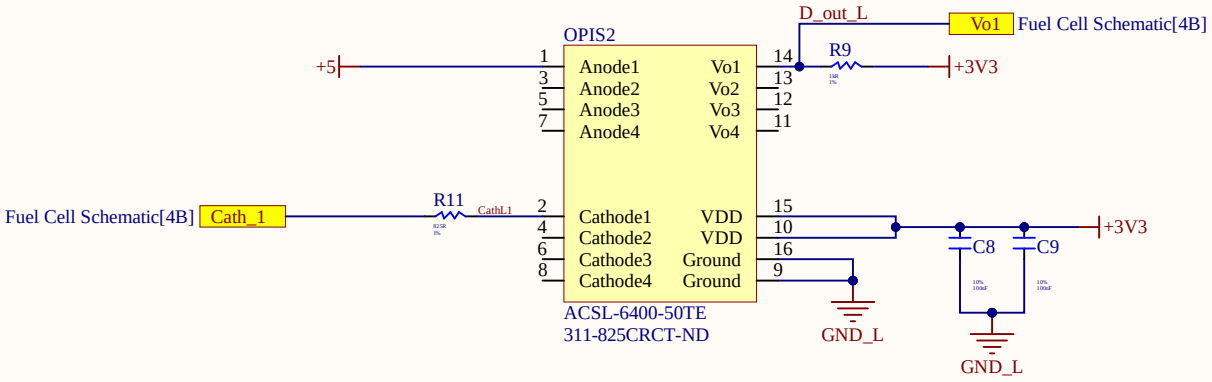

Title		
Size: A	Number	Revision
Date: 2/17/2023		Sheet of
File: C:\Users\..\OptoIso_H2L.SchDoc		Drawn By:

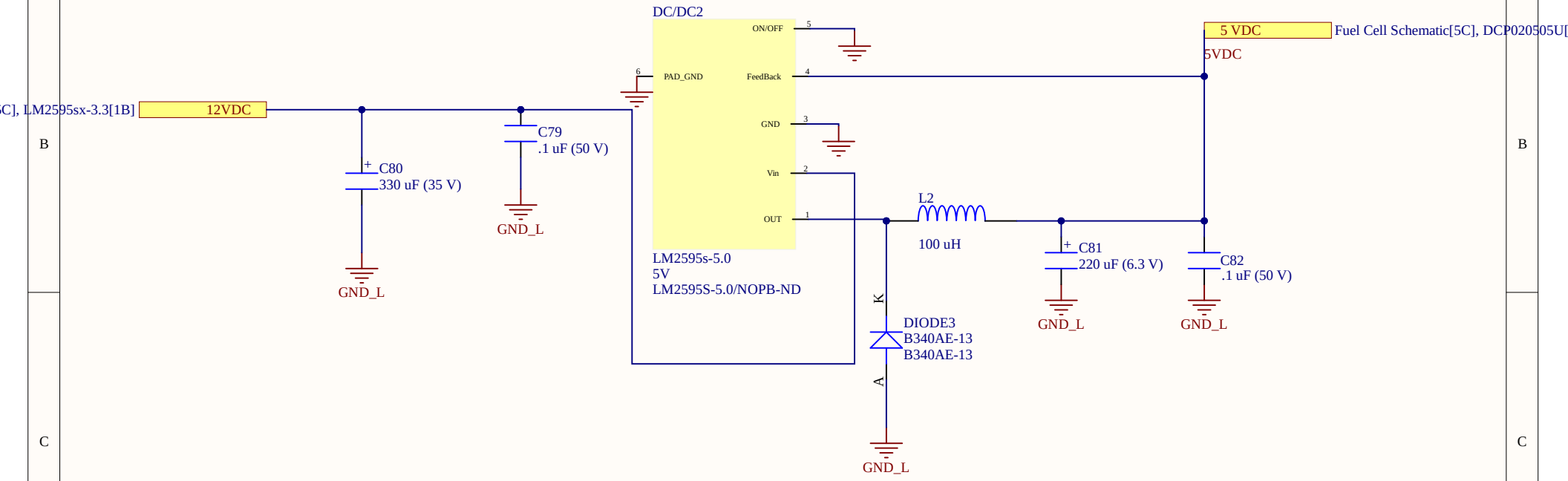

Title		
Size: A	Number:	Revision:
Date: 2/17/2023		Sheet of
File: C:\Users\..\LM2595s-5.0 (1).SchDoc		Drawn By:

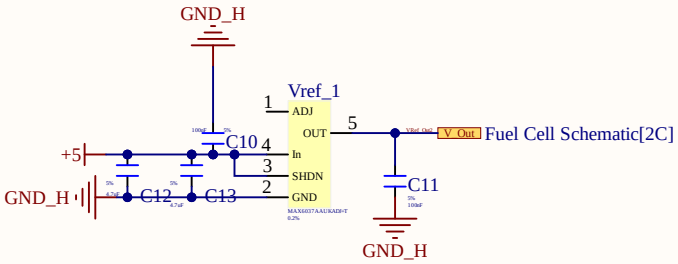

Title		
Size: A	Number	Revision
Date: 2/17/2023		Sheet of
File: C:\Users\..\VRef_2.SchDoc		Drawn By:

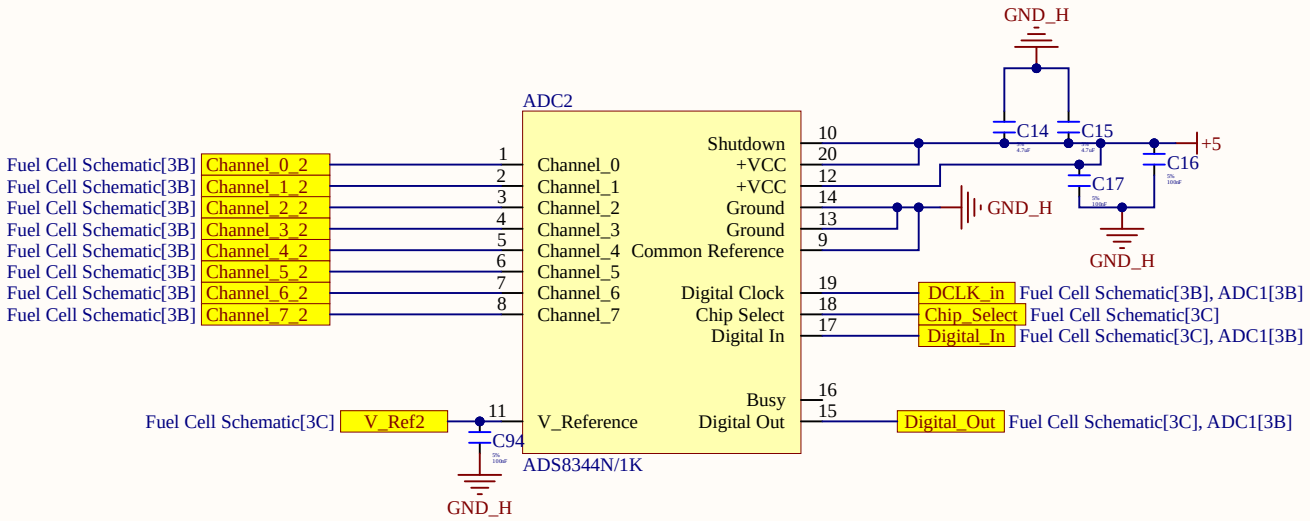

Title		
Size A	Number	Revision
Date: 2/17/2023		Sheet of
File: C:\Users\..\ADC2.SchDoc		Drawn By:

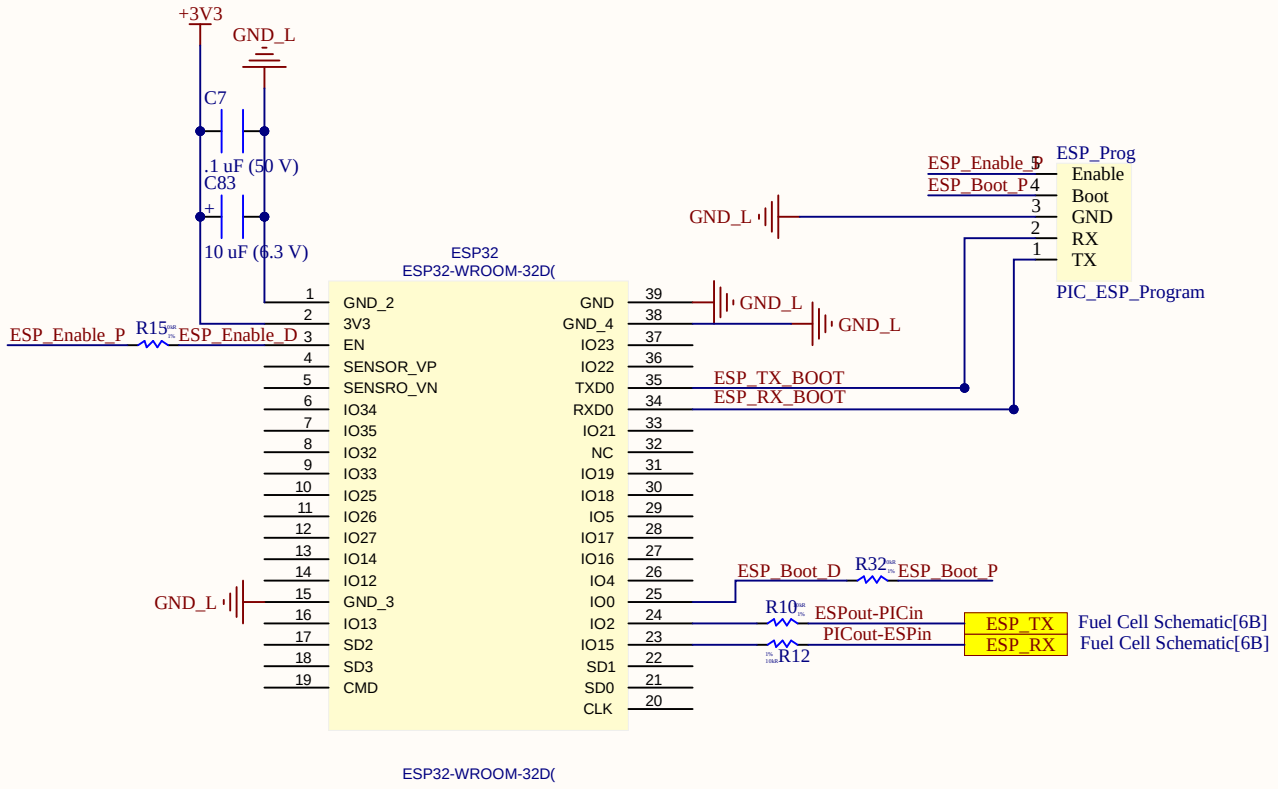

Title		
Size: A	Number	Revision
Date: 2/17/2023		Sheet of
File: C:\Users\..\ESP32.SchDoc		Drawn By:

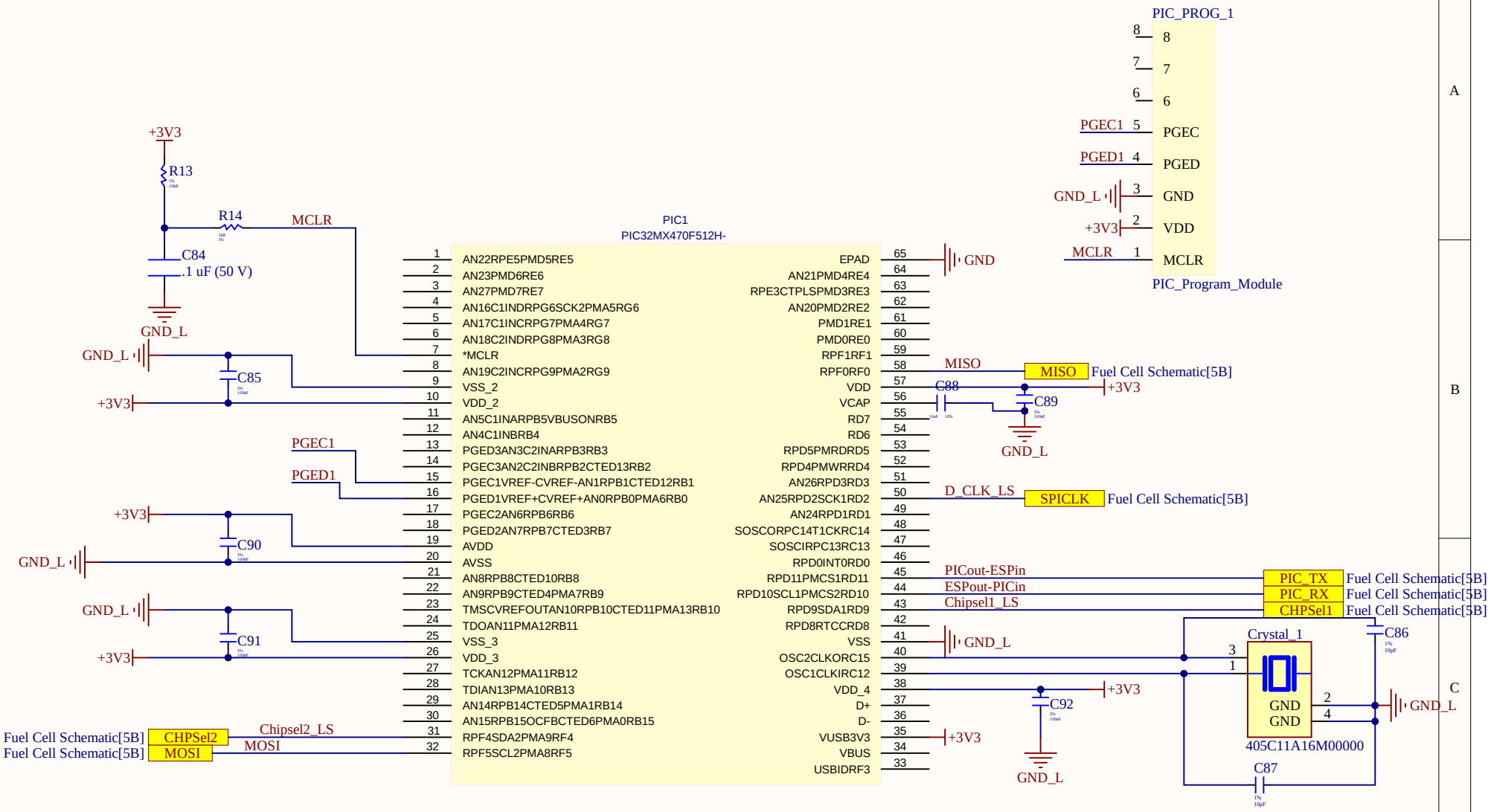
PIC_PROG_1
8
7
6
PGEC1 5 PGEC
PGED1 4 PGED
GND_L 3 GND
+3V3 2 VDD
MCLR 1 MCLR
PIC_Program_Module
PIC1
PIC32MX470F512H-
+3V3
R13
R14
MCLR
C84
.1 uF (50 V)
GND_L
C85
C90
C91
PGEC1
PGED1
MISO
C88
C89
D_CLK_LS
SPICLK
Fuel Cell Schematic[5B]
PICout-ESPin
ESPout-PICin
Chipsel1_LS
PIC_TX
PIC_RX
CHPSel1
Crystal_1
C86
C87
C92
GND
405C11A16M00000
CHPSel2
MOSI
Chipsel2_LS
1 AN22RPE5PMD5RE5
2 AN23PMD6RE6
3 AN27PMD7RE7
4 AN16C1INDRPG6SCK2PMA5RG6
5 AN17C1INCRPG7PMA4RG7
6 AN18C2INDRPG8PMA3RG8
7 *MCLR
8 AN19C2INCRPG9PMA2RG9
9 VSS_2
10 VDD_2
11 AN5C1INARPB5VBUSONRB5
12 AN4C1INBRB4
13 PGED3AN3C2INARPB3RB3
14 PGEC3AN2C2INBRPB2CTED13RB2
15 PGEC1VREF-CVREF-AN1RPB1CTED12RB1
16 PGED1VREF+CVREF+AN0RPB0PMA6RB0
17 PGEC2AN6RPB6RB6
18 PGED2AN7RPB7CTED3RB7
19 AVDD
20 AVSS
21 AN8RPB8CTED10RB8
22 AN9RPB9CTED4PMA7RB9
23 TMSCVREFOUTAN10RPB10CTED11PMA13RB10
24 TDOAN11PMA12RB11
25 VSS_3
26 VDD_3
27 TCKAN12PMA11RB12
28 TDIAN13PMA10RB13
29 AN14RPB14CTED5PMA1RB14
30 AN15RPB15OCFBCTED6PMA0RB15
31 RPF4SDA2PMA9RF4
32 RPF5SCL2PMA8RF5
65 EPAD
64 AN21PMD4RE4
63 RPE3CTPLSPMD3RE3
62 AN20PMD2RE2
61 PMD1RE1
60 PMD0RE0
59 RPF1RF1
58 RPF0RF0
57 VDD
56 VCAP
55 RD7
54 RD6
53 RPD5PMRDRD5
52 RPD4PMWRRD4
51 AN26RPD3RD3
50 AN25RPD2SCK1RD2
49 AN24RPD1RD1
48 SOSCORPC14T1CKRC14
47 SOSCIRPC13RC13
46 RPD0INT0RD0
45 RPD11PMCS1RD11
44 RPD10SCL1PMCS2RD10
43 RPD9SDA1RD9
42 RPD8RTCCRD8
41 VSS
40 OSC2CLKORC15
39 OSC1CLKIRC12
38 VDD_4
37 D+
36 D-
35 VUSB3V3
34 VBUS
33 USBIDRF3
Title
Size A
Number
Revision
Date: 2/17/2023
Sheet of
File: C:\Users\..\PIC32.SchDoc
Drawn By:

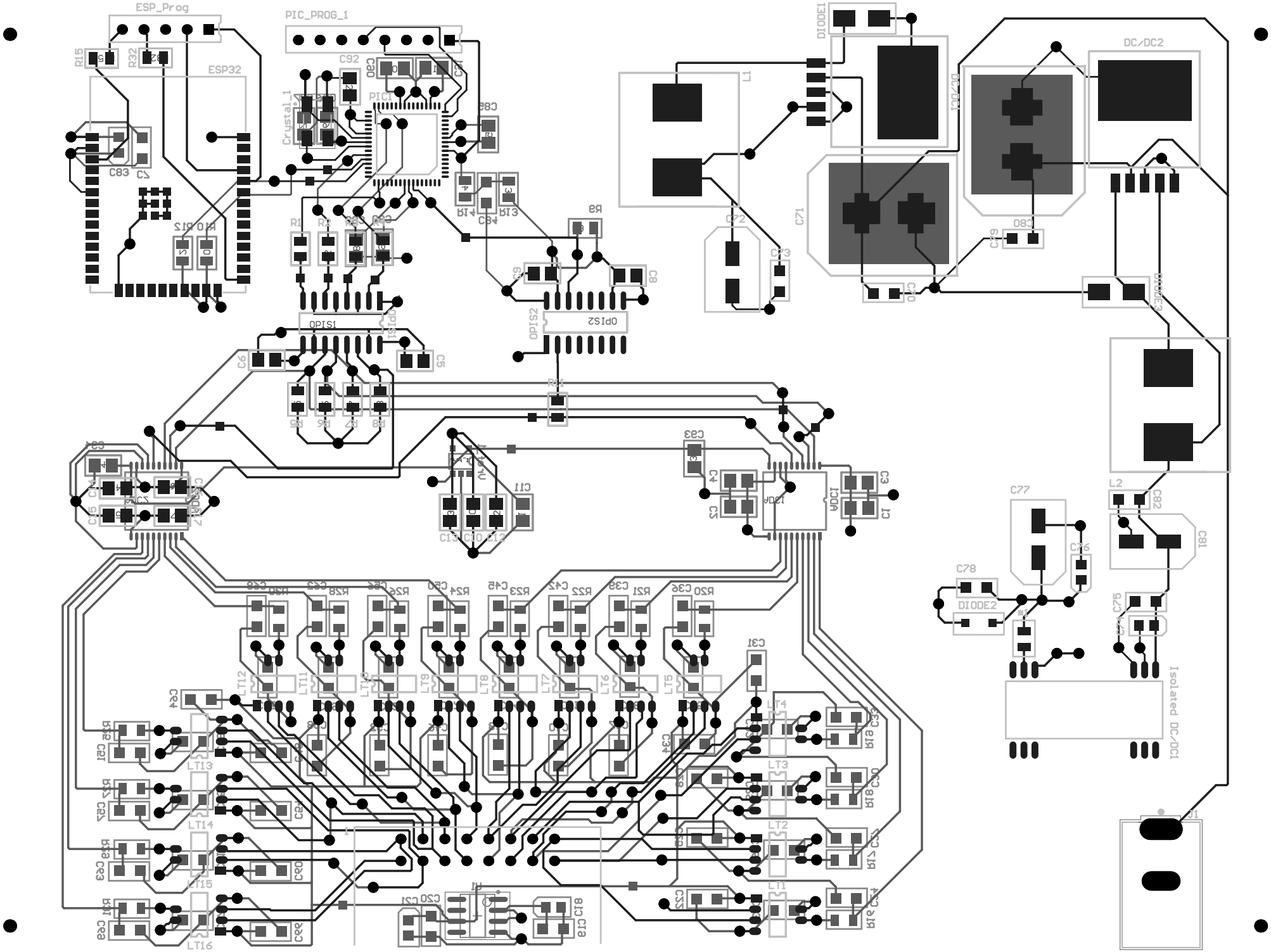
ESP_Prog
PIC_PROG_1
ESP32
Crystal_1
PIC1
DIODE1
DC/DC1
DC/DC2
L1
C71
C72
C73
C80
C79
C70
DIODE3
OPIS1
OPIS2
C6
C5
C11
C13
C10
C12
C3
C4
C2
C1
C77
C76
C78
DIODE2
L2
C82
C81
C75
C74
Isolated DC/DC1
J1
LT1
LT2
LT3
LT4
LT5
LT6
LT7
LT8
LT9
LT12
LT13
LT14
LT15
LT16

Board Stack Report