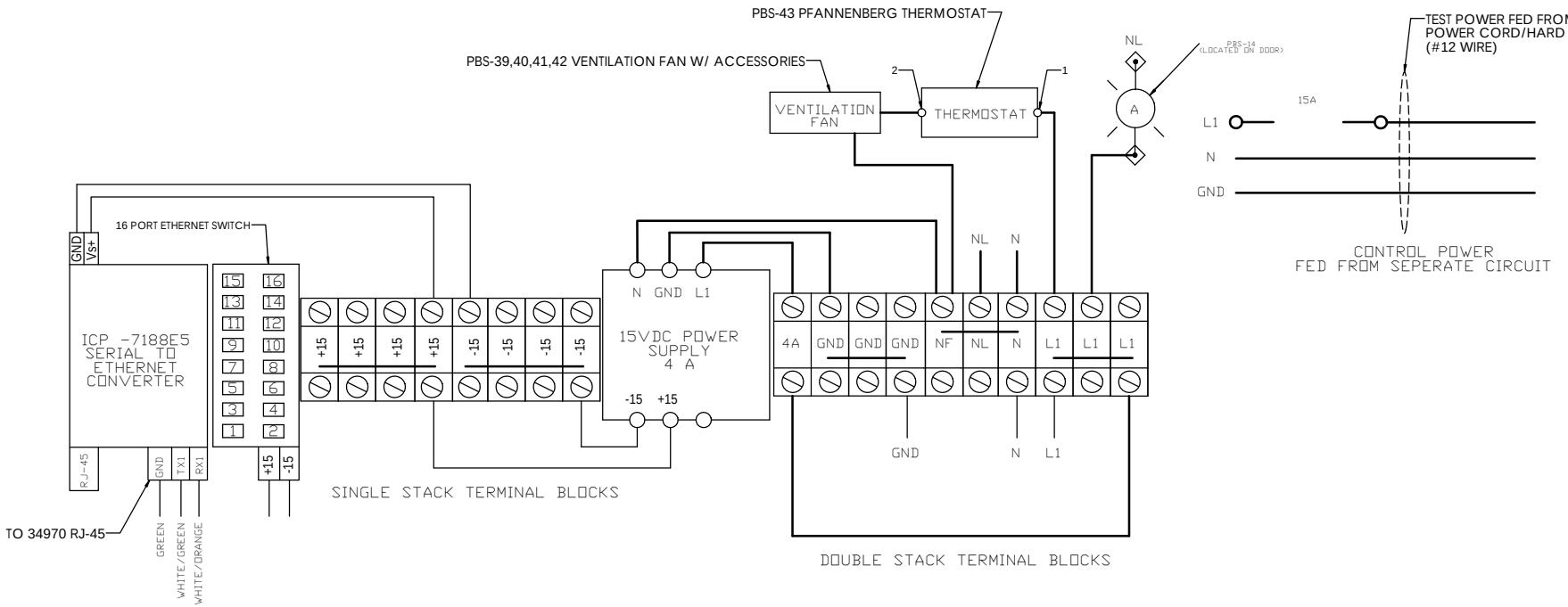

COM PORT	DEVICE
COM1	34970A
COM2	
COM3	
COM4	
COM5	
COM6	
COM7	
COM8	

ETHERNET PORT	DEVICE
1	-7188E5/AGILENT
2	WATER PRESSURE METER
3	WATER TEMPERATURE METER
4	WATER FLOW/TOTAL METER
5	WT300
6	
7	
8	
9	
10	
11	
12	
13	
14	
15	
16	

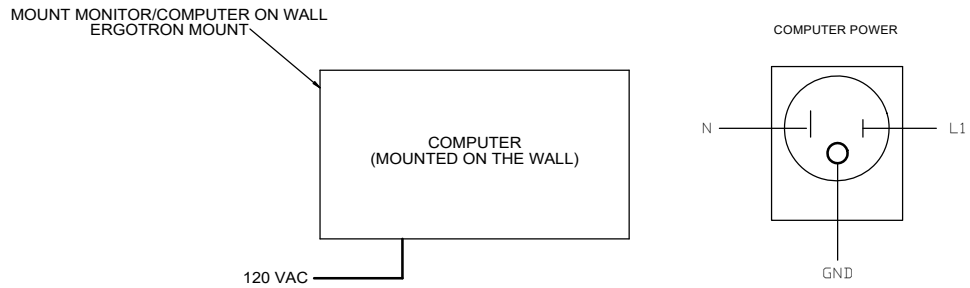

NOTES:
1. PLACE STICKER ON DOOR FRONT "CAUTION POWER FED FROM MULTIPLE SOURCES"
2. PLACE COMPONENTS INSIDE 36"HX30"WX12.75"D ENCLOSURE (PBS-1,PBS-2)

PROPRIETARY AND CONFIDENTIAL
THE INFORMATION CONTAINED IN THIS DRAWING IS THE SOLE PROPERTY OF <INSERT COMPANY NAME HERE>. ANY REPRODUCTION IN PART OR AS A WHOLE WITHOUT THE WRITTEN PERMISSION OF <INSERT COMPANY NAME HERE> IS PROHIBITED.

	NAME	DATE
DRAWN	CJS	10/4/16
CHECKED	CJS	10/4/16
ENG APPR.	CJS	10/4/16
MFG APPR.	CJS	10/4/16
Q.A.	CJS	10/4/16

UNLESS OTHERWISE SPECIFIED:
DIMENSIONS ARE IN INCHES
TOLERANCES:
FRACTIONAL ±
ANGULAR: MACH ± BEND ±
TWO PLACE DECIMAL ±
THREE PLACE DECIMAL ±
INTERPRET GEOMETRIC TOLERANCING PER:
MATERIAL
FINISH
NEXT ASSY | USED ON
APPLICATION
COMMENTS:

TITLE: AP3 DISHWASHER DOE STATIONS

SIZE D | DWG. NO. AP3 DISH DOE | REV
SCALE: 0.15 | WEIGHT: | SHEET 1 OF 4

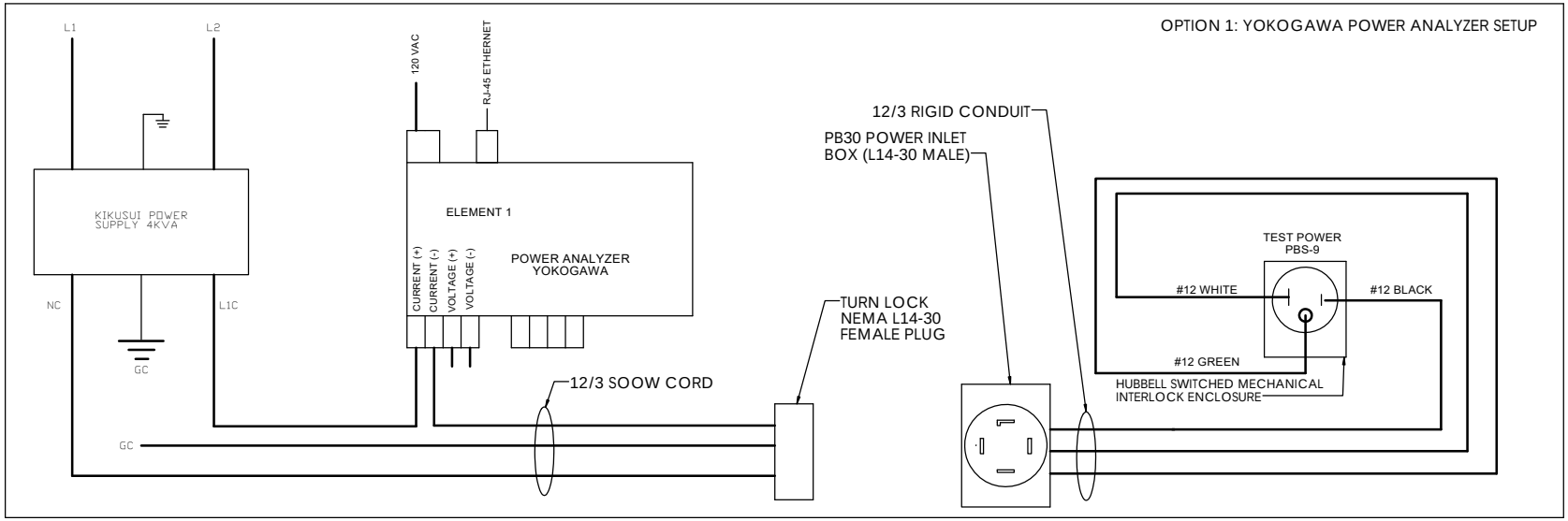

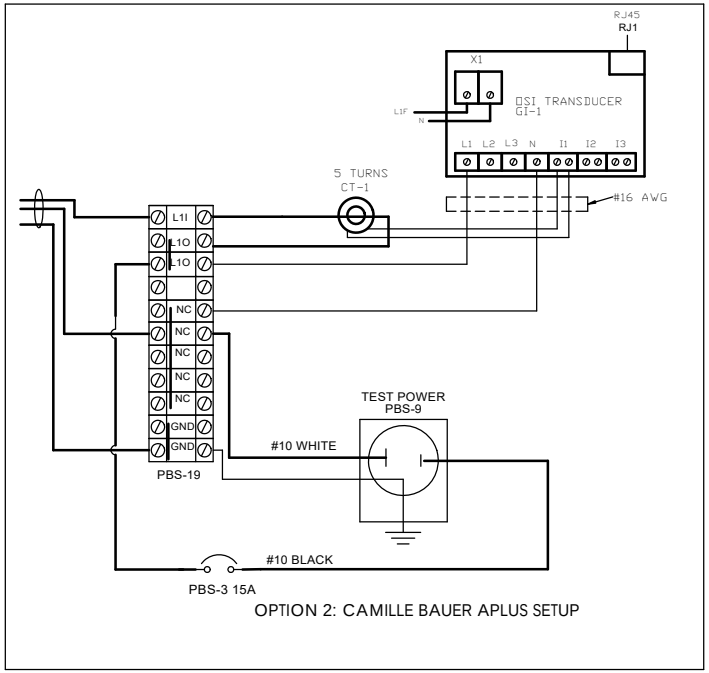

OPTION 2: CAMILLE BAUER APLUS SETUP

UNLESS OTHERWISE SPECIFIED:		NAME	DATE		
DIMENSIONS ARE IN INCHES TOLERANCES: FRACTIONAL± ANGULAR: MACH± BEND± TWO PLACE DECIMAL± THREE PLACE DECIMAL±	DRAWN	CJS	0/4/16	TITLE: AP3 DISHWASHER DOE STATIONS	
	CHECKED	CJS	0/4/16		
	ENG APPR.	CJS	0/4/16		
	MFG APPR.	CJS	0/4/16		
INTERPRET GEOMETRIC TOLERANCING PER:	Q.A.	CJS	0/4/16		
MATERIAL	COMMENTS:				
FINISH				SIZE D	DWG. NO. AP3 DISH DOE	REV
NEXT ASSY / USED ON				SCALE: 1:1	WEIGHT:	SHEET 2 OF 4
APPLICATION						

PROPRIETARY AND CONFIDENTIAL
THE INFORMATION CONTAINED IN THIS DRAWING IS THE SOLE PROPERTY OF <INSERT COMPANY NAME HERE>. ANY REPRODUCTION IN PART OR AS A WHOLE WITHOUT THE WRITTEN PERMISSION OF <INSERT COMPANY NAME HERE> IS PROHIBITED.

TEST POWER FED FROM POWER CORD/ CHROMA POWER SUPPLY (#10 WIRE)

Agilent 34792A - Card 1(34901A)				
Channel	Channel Label	Wire #	Color	Description
101	L	TYPE T THERMOCOUPLE	RED	TC 1
	H		BLUE	
102	L	TYPE T THERMOCOUPLE	RED	TC 2
	H		BLUE	
103	L	TYPE T THERMOCOUPLE	RED	TC 3
	H		BLUE	
104	L	TYPE T THERMOCOUPLE	RED	TC 4
	H		BLUE	
105	L	TYPE T THERMOCOUPLE	RED	TC 5
	H		BLUE	
106	L	TYPE T THERMOCOUPLE	RED	TC 6
	H		BLUE	
107	L	TYPE T THERMOCOUPLE	RED	TC 7
	H		BLUE	
108	L	TYPE T THERMOCOUPLE	RED	TC 8
	H		BLUE	
109	L	TYPE T THERMOCOUPLE	RED	TC 9
	H		BLUE	
110	L	TYPE T THERMOCOUPLE	RED	TC 10
	H		BLUE	

Agilent 34792A - Card 1 Continued				
Channel	Channel Label	Wire #	Color	Description
111	L	TYPE T THERMOCOUPLE	RED	TC 11
	H		BLUE	
112	L	TYPE T THERMOCOUPLE	RED	TC 12
	H		BLUE	
113	-	AC/DC CURRENT CLAMP	WHITE(OUT)	DC CLAMP 1
	+		BLACK	
114	-	AC/DC CURRENT CLAMP	WHITE(OUT)	DC CLAMP 2
	+		BLACK(COM)	
115	-	AC/DC CURRENT CLAMP	WHITE(OUT)	DC CLAMP 3
	+		BLACK(COM)	
116	-	AC/DC CURRENT CLAMP	WHITE(OUT)	DC CLAMP 4
	+		BLACK(COM)	
117	-	AC/DC CURRENT CLAMP	WHITE(OUT)	DC CLAMP 5
	+		BLACK(COM)	
118				
119				

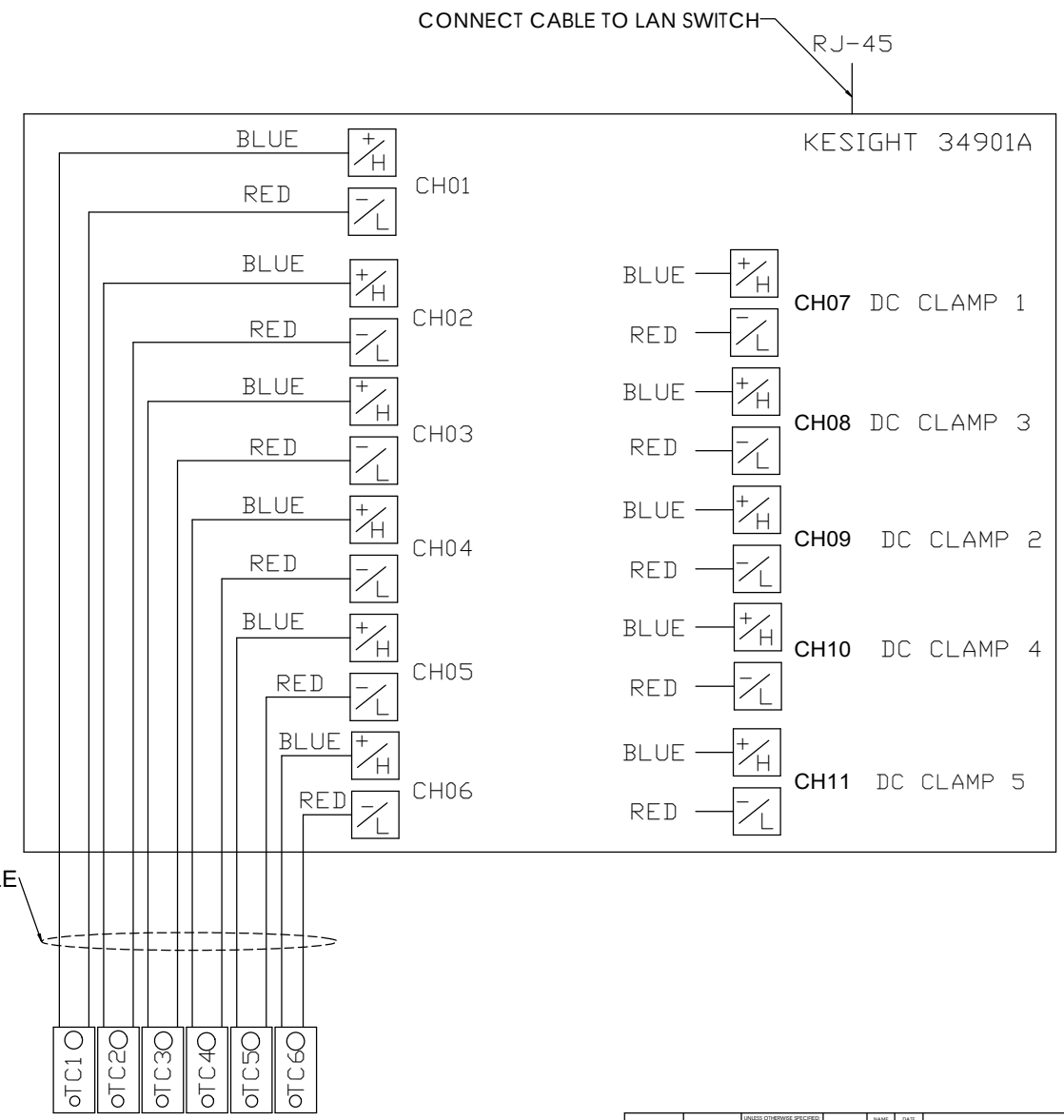

SPLIT-CORE DC CURRENT TRANSDUCER
(HCT-0010 HALL EFFECT)
or
Split Core AC Current
DCT-0016-10

RED (+15VDC)
GREEN (-15VDC)
WHITE (OUT)
BLACK (COM)

CLAMP EVENT SENSOR RECEPTACLE (QTY 5)

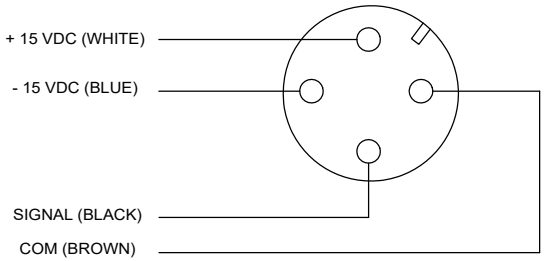

UNLESS OTHERWISE SPECIFIED:		NAME	DATE		
DIMENSIONS ARE IN INCHES TOLERANCES: FRACTIONAL ± ANGULAR: MACH ± BEND ± TWO PLACE DECIMAL ± THREE PLACE DECIMAL ±	DRAWN	CJS	10/4/16	TITLE: AP3 DISHWASHER DOE STATIONS	
	CHECKED	CJS	10/4/16		
	ENG APPR.	CJS	10/4/16		
	MFG APPR.	CJS	10/4/16		
INTERPRET GEOMETRIC TOLERANCING PER:	Q.A.	CJS	10/4/16		
MATERIAL	COMMENTS:			SIZE D	DWG. NO. AP3 DISH DOE REV
FINISH				SCALE: 1:1	WEIGHT: SHEET 3 OF 4
NEXT ASSY USED ON					
APPLICATION					

PROPRIETARY AND CONFIDENTIAL
THE INFORMATION CONTAINED IN THIS DRAWING IS THE SOLE PROPERTY OF <INSERT COMPANY NAME HERE>. ANY REPRODUCTION IN PART OR AS A WHOLE WITHOUT THE WRITTEN PERMISSION OF <INSERT COMPANY NAME HERE> IS PROHIBITED.

AP3 DISH DOE
D

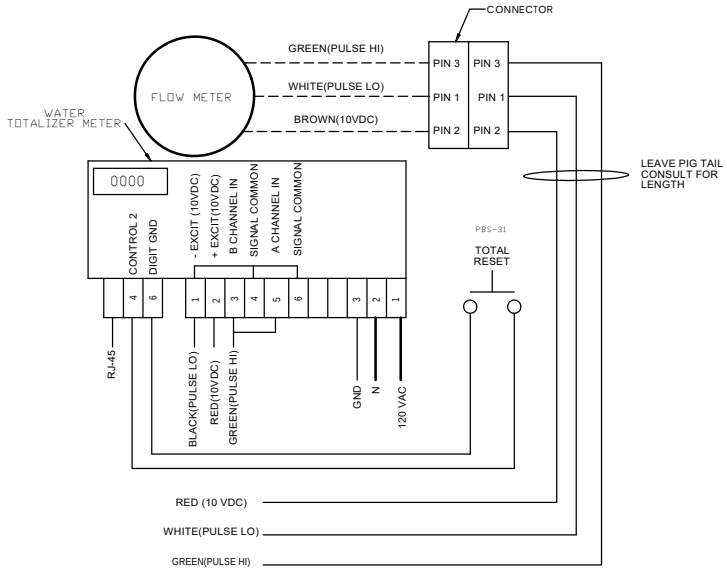

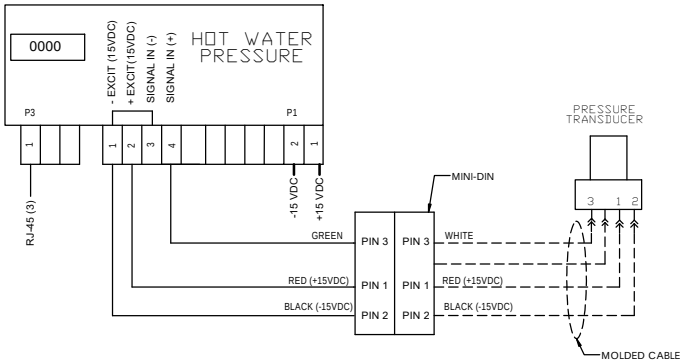

PRESSURE TRANSDUCER CONNECTOR (5 PIN)

(BOTTOM CABINET VIEW)

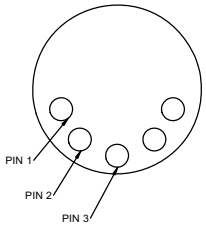

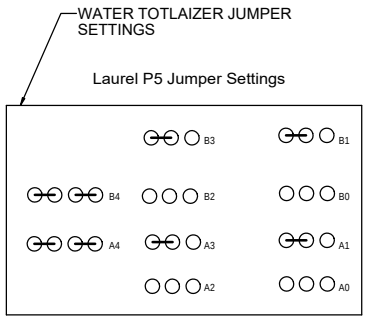

IF NO JUMPER REQUIRED, PLACE ON SINGLE PIN

FLOW TRANSDUCER CONNECTOR (4 PIN)

(BOTTOM CABINET VIEW)

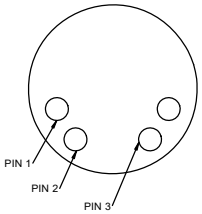

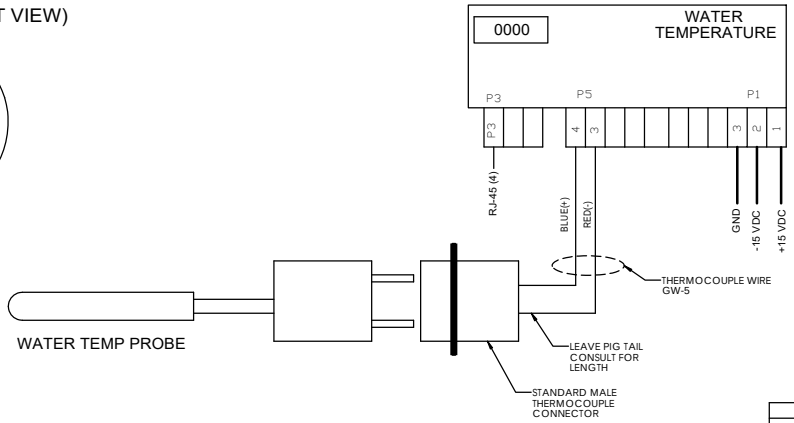

MATCH MATERIAL TYPE

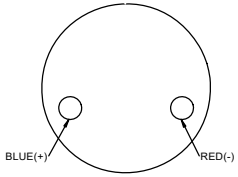

		UNLESS OTHERWISE SPECIFIED:		NAME	DATE
		DIMENSIONS ARE IN INCHES	DRAWN		
		TOLERANCES:			
		FRACTIONAL ±	CHECKED		
		ANGULAR: MACH ± BEND ±	ENG APPR.		
		TWO PLACE DECIMAL ±			
		THREE PLACE DECIMAL ±	MFG APPR.		
		INTERPRET GEOMETRIC TOLERANCING PER:	Q.A.		
		MATERIAL	COMMENTS:		
		FINISH			
NEXT ASSY	USED ON				
APPLICATION					

PROPRIETARY AND CONFIDENTIAL
THE INFORMATION CONTAINED IN THIS DRAWING IS THE SOLE PROPERTY OF <INSERT COMPANY NAME HERE>. ANY REPRODUCTION IN PART OR AS A WHOLE WITHOUT THE WRITTEN PERMISSION OF <INSERT COMPANY NAME HERE> IS PROHIBITED.

TITLE:

SIZE	DWG. NO.	REV
D	AP3 DISH DOE	
SCALE: 0.15	WEIGHT:	SHEET 4 OF 4

Laurel P5 Jumper Settings