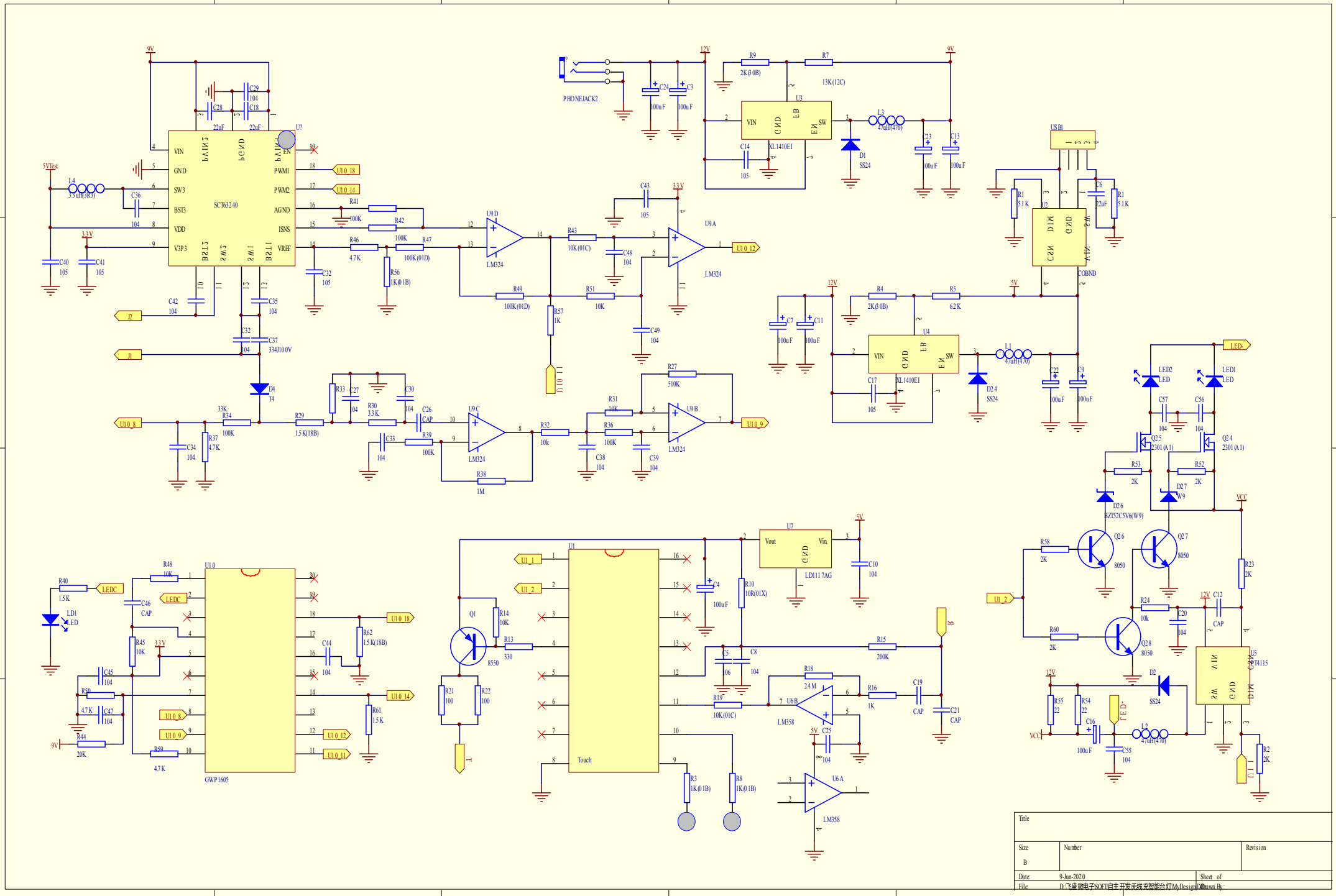

Title		
Size B	Number	Revision
Date: 9-Jun-2020		Sheet of
File: D:\飞盛微电子SOFT\自主开发无线充智能台灯\MyDesign\PCB		Drawn By: