	TABLE OF CONTENTS
PAGE	DESCRIPTION
1	TITLE PAGE
2	SYSTEM
3	BANK14_15
4	BANK34_35
5	SRAM_AUDIO
6	IO
7	DISPLAY_UART_BT
8	PIC_USB
9	FPGA_POWER
10	POWER

REVISION RECORD			
LTR	ECO NO:	APPROVED:	DATE:

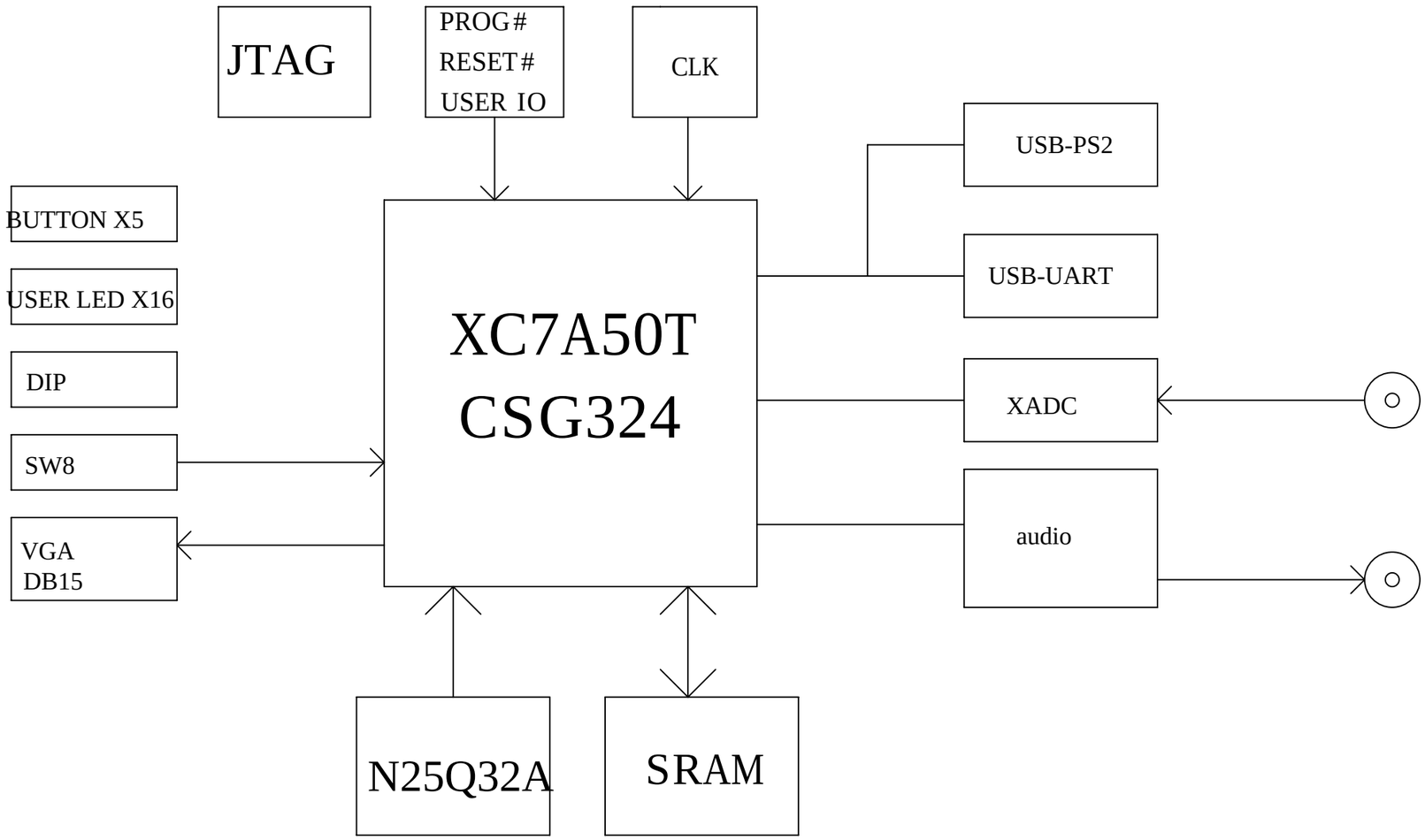

TITLE: E-ELEMENTS					
Design :		DRAWING NO:			
CHECKED:					
STANDARDIZED:		VERSION:	SIZE: A3	SCALE:	SHEET: 1 OF 10
RELEASED:		E-ELEMENTS			

Table 2-1: **7 Series FPGA Configuration Modes**

Configuration Mode	M[2:0]	Bus Width	CCLK Direction
Master Serial	000	x1	Output
Master SPI	001	x1, x2, x4	Output
Master BPI	010	x8, x16	Output
Master SelectMAP	100	x8, x16	Output
JTAG	101	x1	Not Applicable
Slave SelectMAP	110	x8, x16, x32(1)	Input
Slave Serial(2)	111	x1	Input

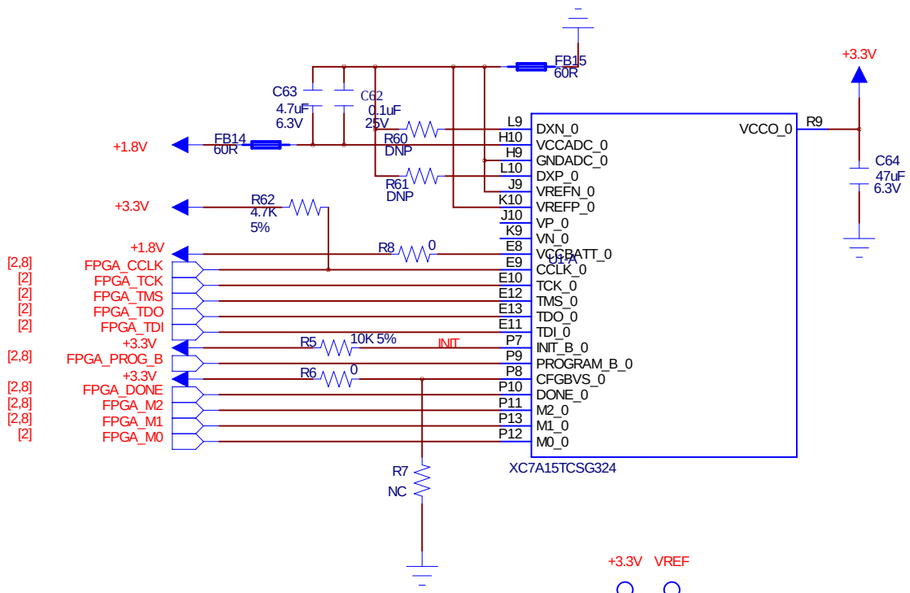

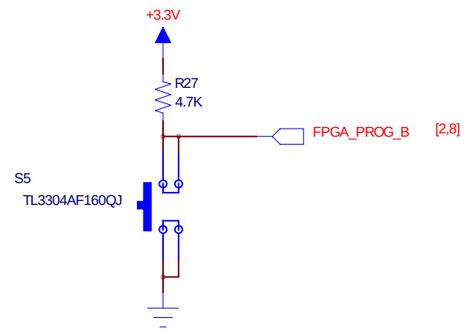

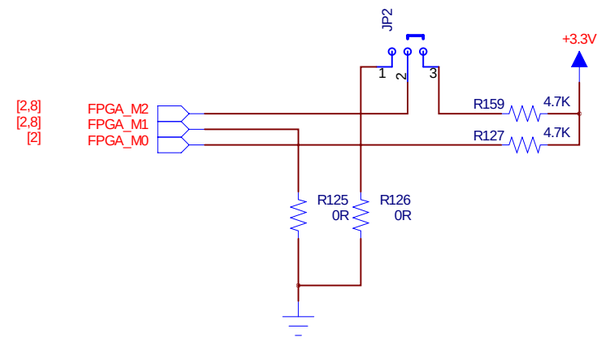

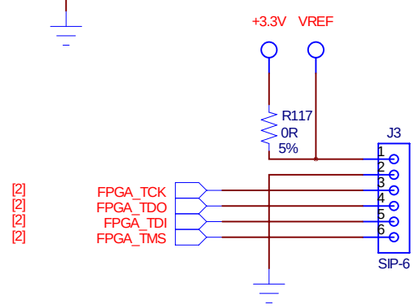

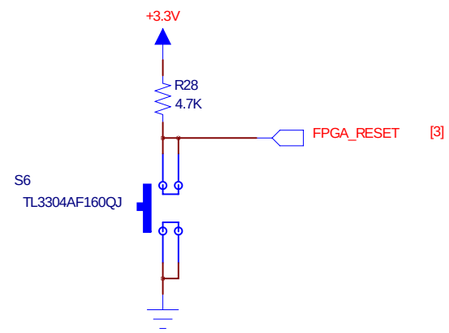

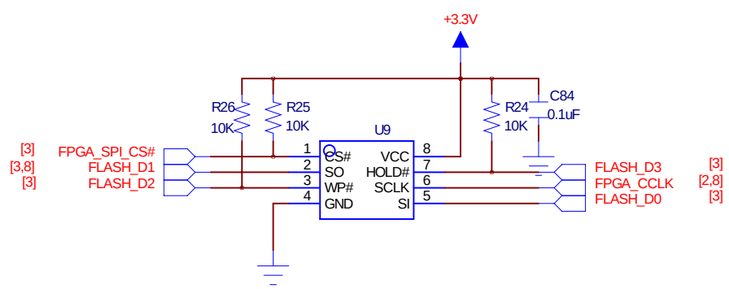

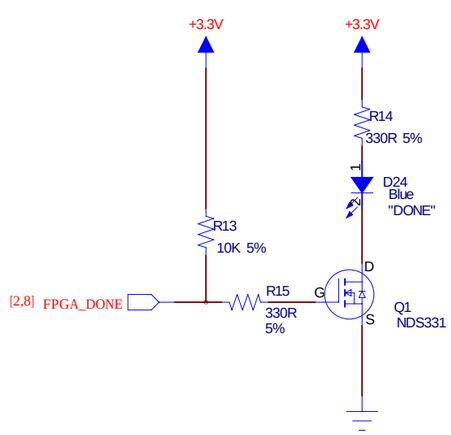

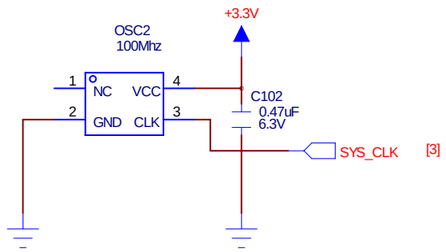

TITLE: SYSTEM					
Design :		DRAWING NO:			
CHECKED:					
STANDARDIZED:		VERSION:	SIZE: A3	SCALE:	SHEET: 2 OF 10
RELEASED:		E-ELEMENTS			

REVISION RECORD			
LTR	ECO NO:	APPROVED:	DATE:

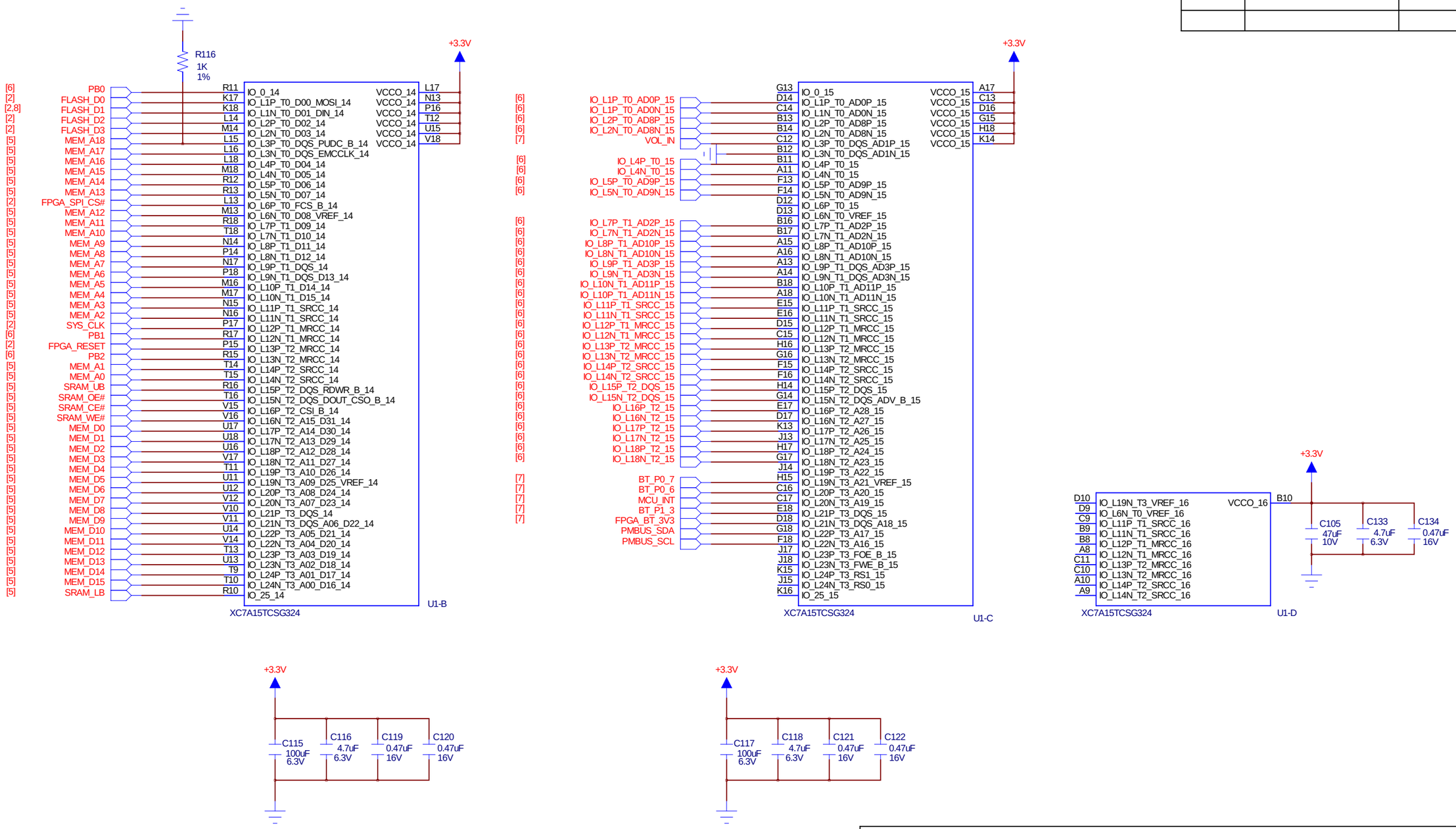

TITLE:	BANK_14_15				
Design :		DRAWING NO:			
CHECKED:					
STANDARDIZED:		VERSION:	SIZE: A3	SCALE:	SHEET: 3 OF 10
RELEASED:		E-ELEMENTS			

REVISION RECORD			
LTR	ECO NO:	APPROVED:	DATE:

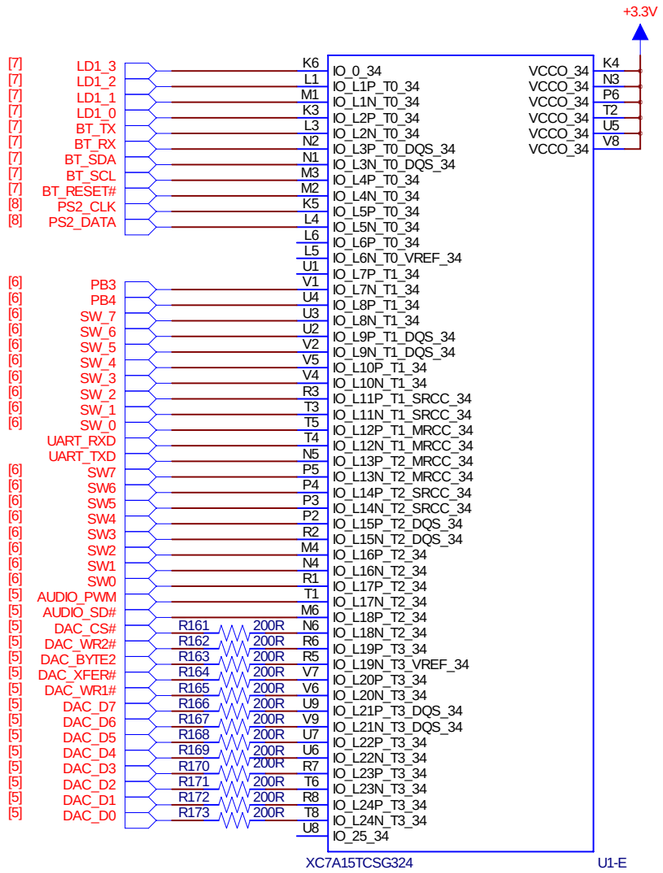

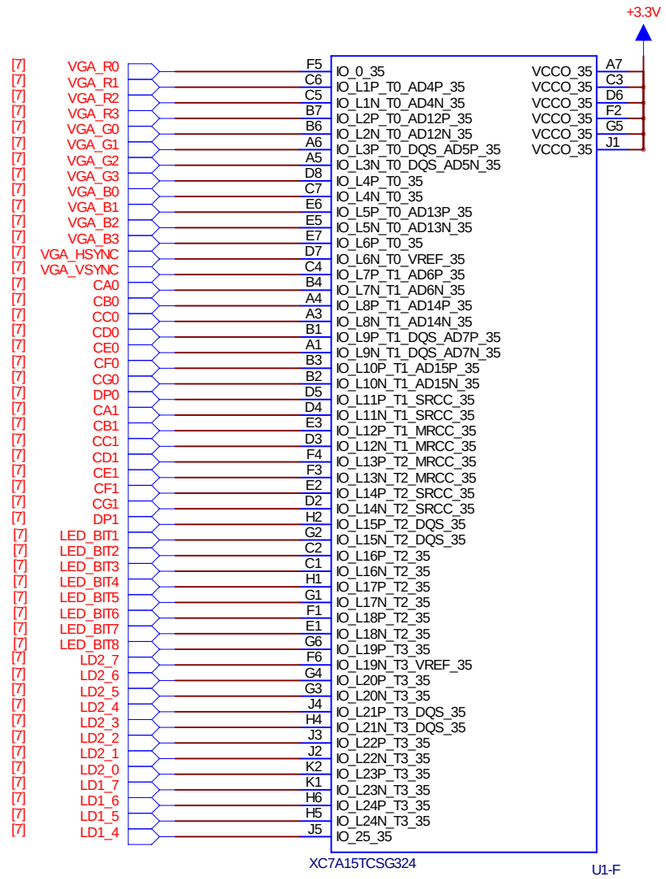

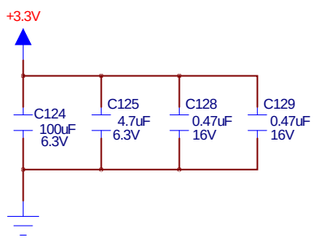

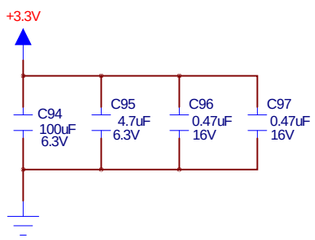

TITLE:	BANK_34_35				
Design :		DRAWING NO:			
CHECKED:					
STANDARDIZED:		VERSION:	SIZE: A3	SCALE:	SHEET: 4 OF 10
RELEASED:		E-ELEMENTS			

REVISION RECORD			
LTR	ECO NO:	APPROVED:	DATE:

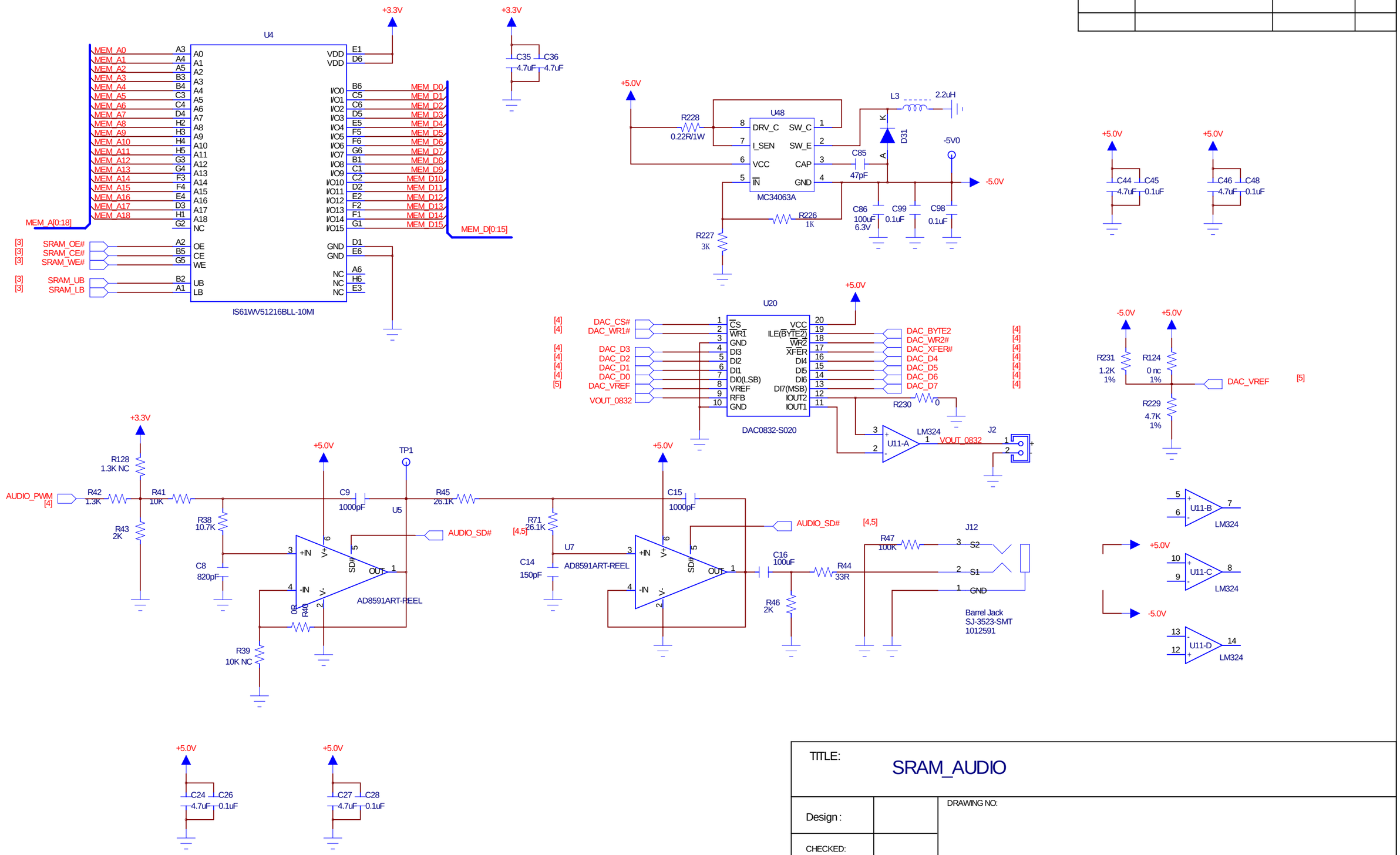

TITLE:	SRAM_AUDIO				
Design :		DRAWING NO:			
CHECKED:					
STANDARDIZED:		VERSION:	SIZE: A3	SCALE:	SHEET: 5 OF 10
RELEASED:		E-ELEMENTS			

REVISION RECORD			
LTR	ECO NO:	APPROVED:	DATE:

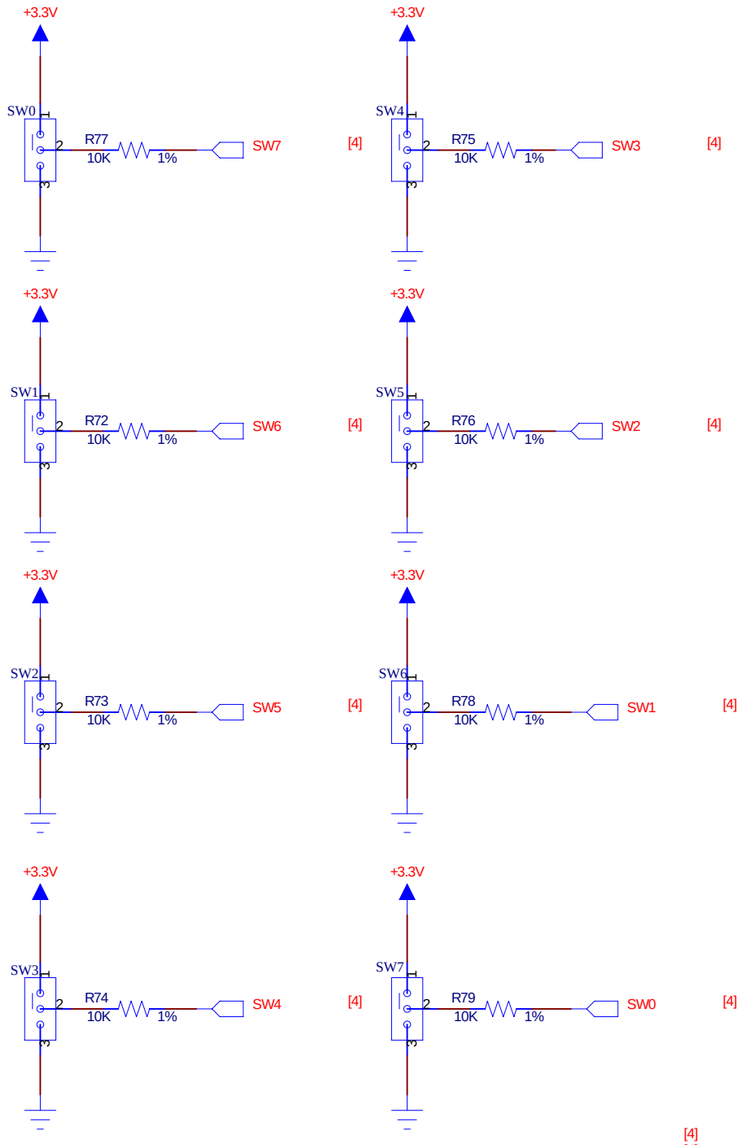

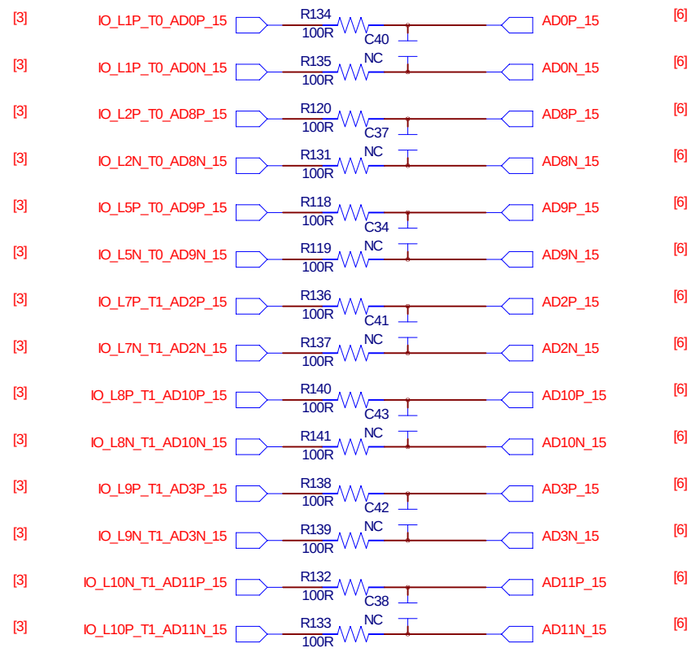

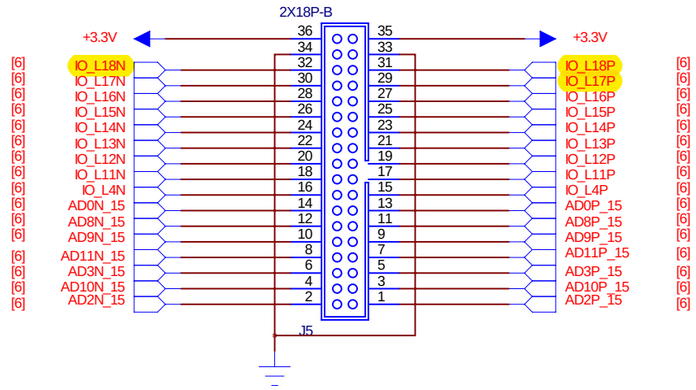

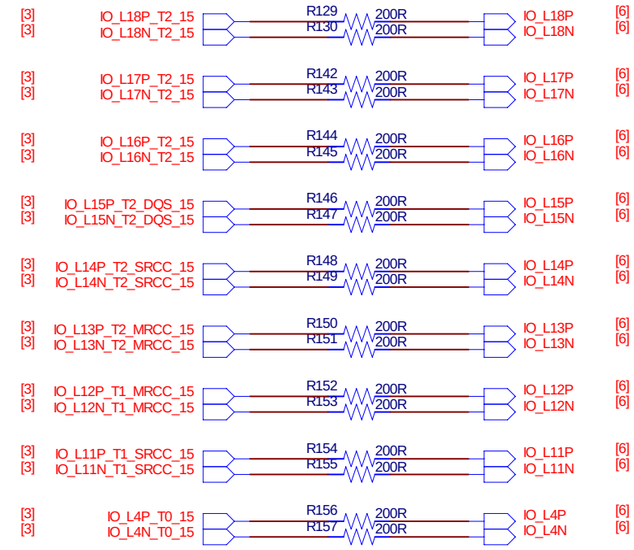

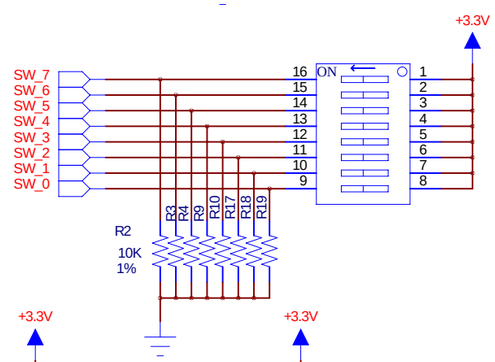

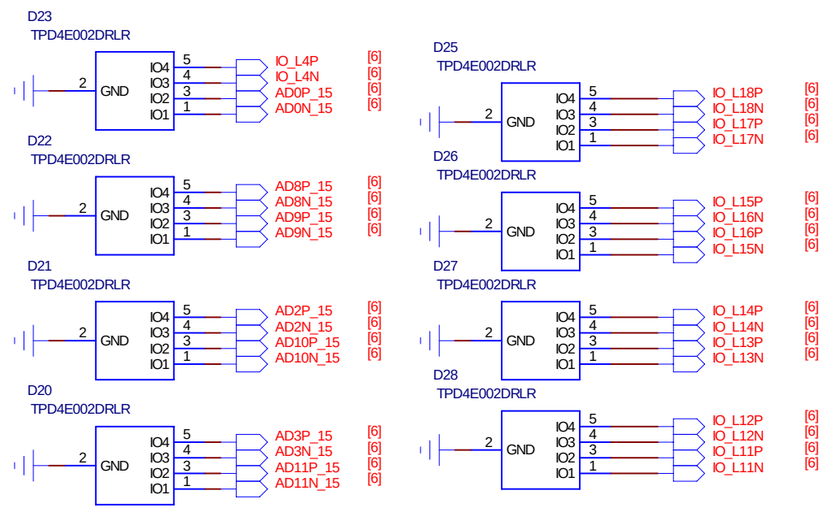

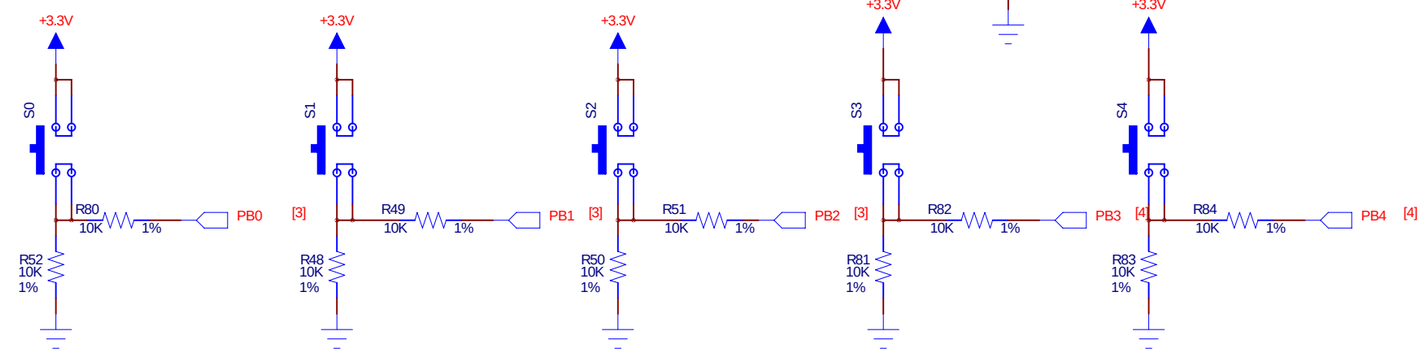

TITLE: IO					
Design :		DRAWING NO:			
CHECKED:					
STANDARDIZED:		VERSION:	SIZE: A3	SCALE:	SHEET: 6 OF 10
RELEASED:		E-ELEMENTS			

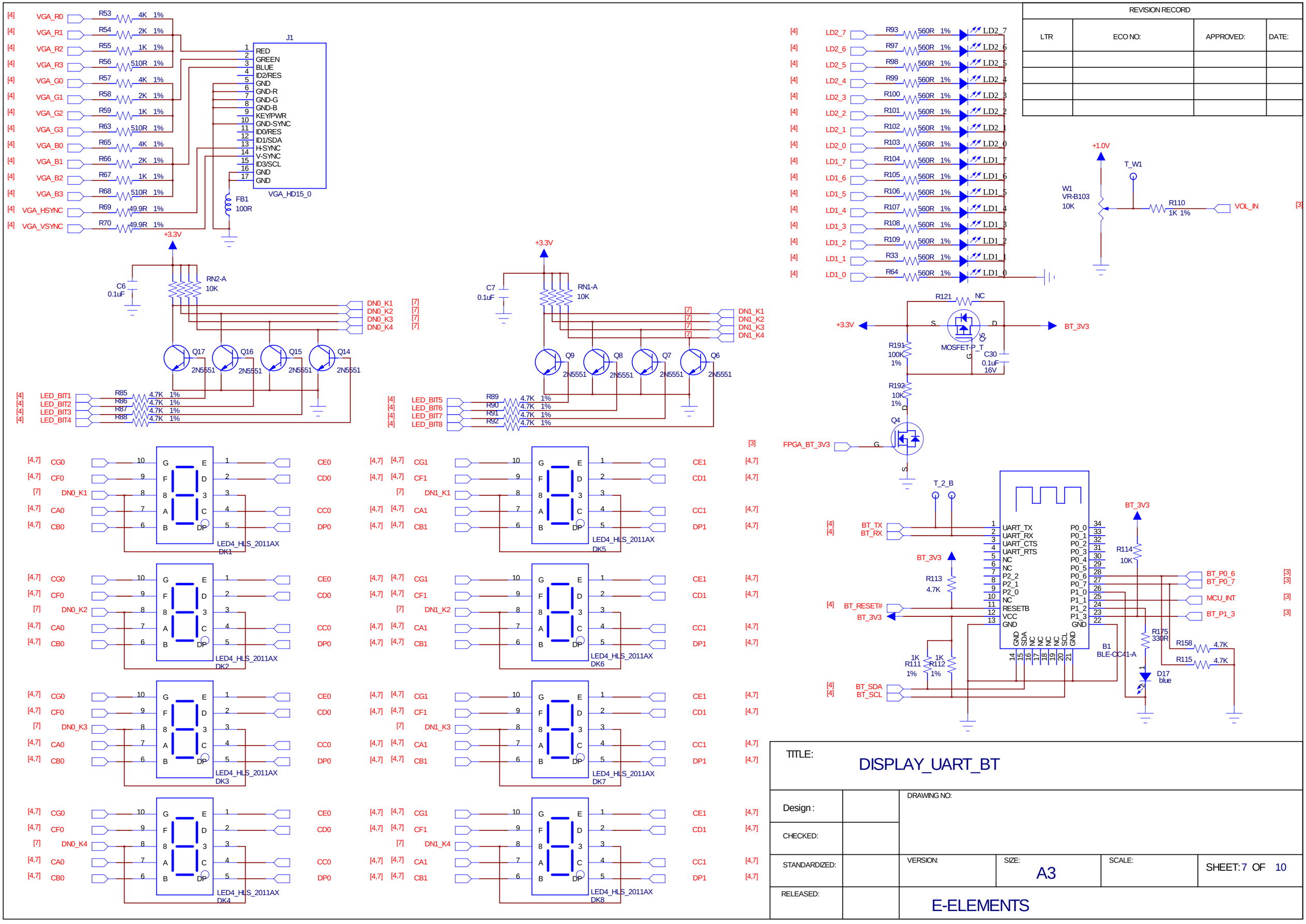

REVISION RECORD			
LTR	ECO NO:	APPROVED:	DATE:

TITLE: DISPLAY_UART_BT

Design :		DRAWING NO:			
CHECKED:					
STANDARDIZED:		VERSION:	SIZE: A3	SCALE:	SHEET: 7 OF 10
RELEASED:		E-ELEMENTS			

REVISION RECORD			
LTR	ECO NO:	APPROVED:	DATE:

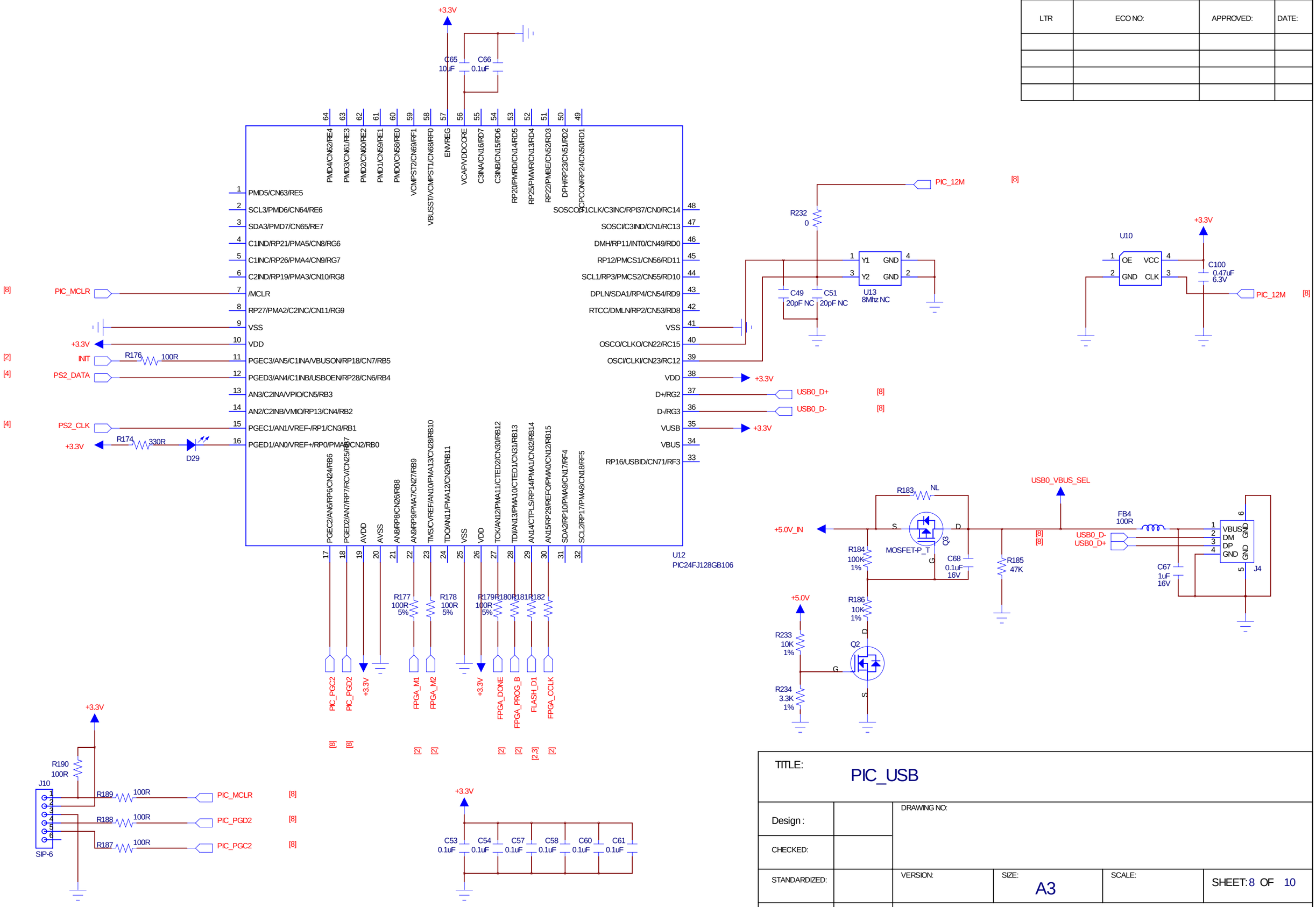

TITLE:	PIC_USB				
Design :		DRAWING NO:			
CHECKED:					
STANDARDIZED:		VERSION:	SIZE: A3	SCALE:	SHEET: 8 OF 10
RELEASED:		E-ELEMENTS			

REVISION RECORD			
LTR	ECO NO:	APPROVED:	DATE:

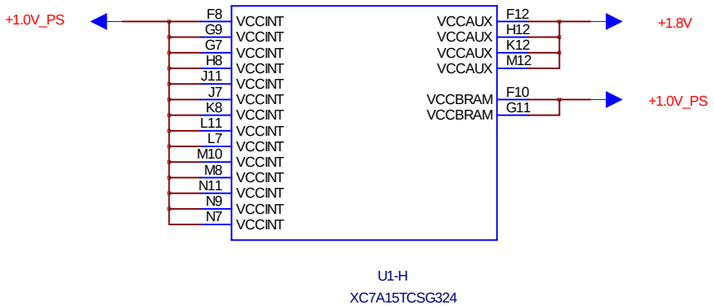

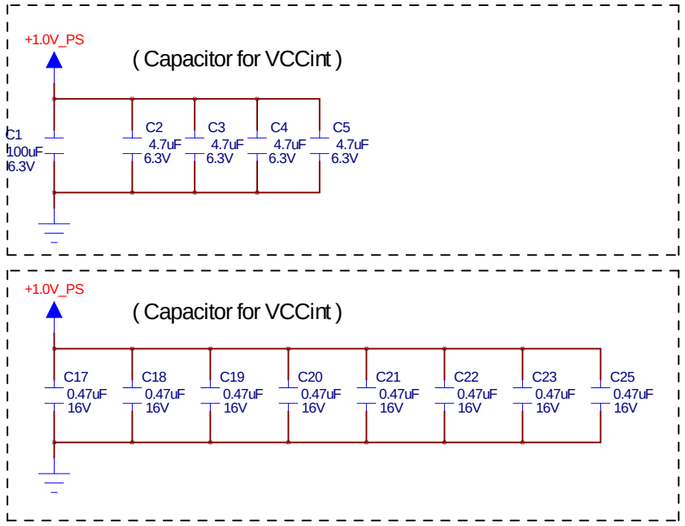

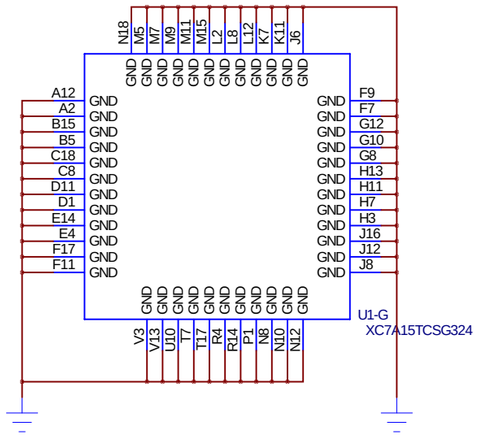

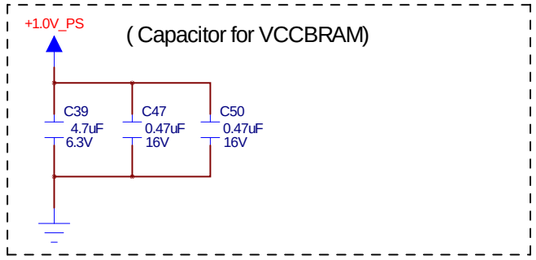

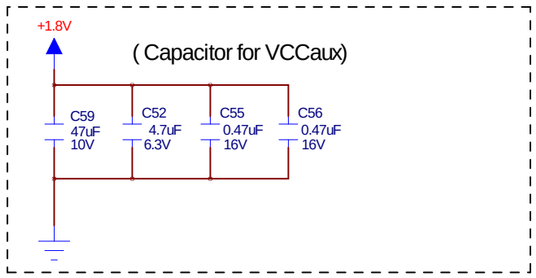

TITLE: FPGA_POWER					
Design :		DRAWING NO:			
CHECKED:					
STANDARDIZED:		VERSION:	SIZE: A3	SCALE:	SHEET: 9 OF 10
RELEASED:		E-ELEMENTS			

REVISION RECORD			
LTR	ECO NO:	APPROVED:	DATE:

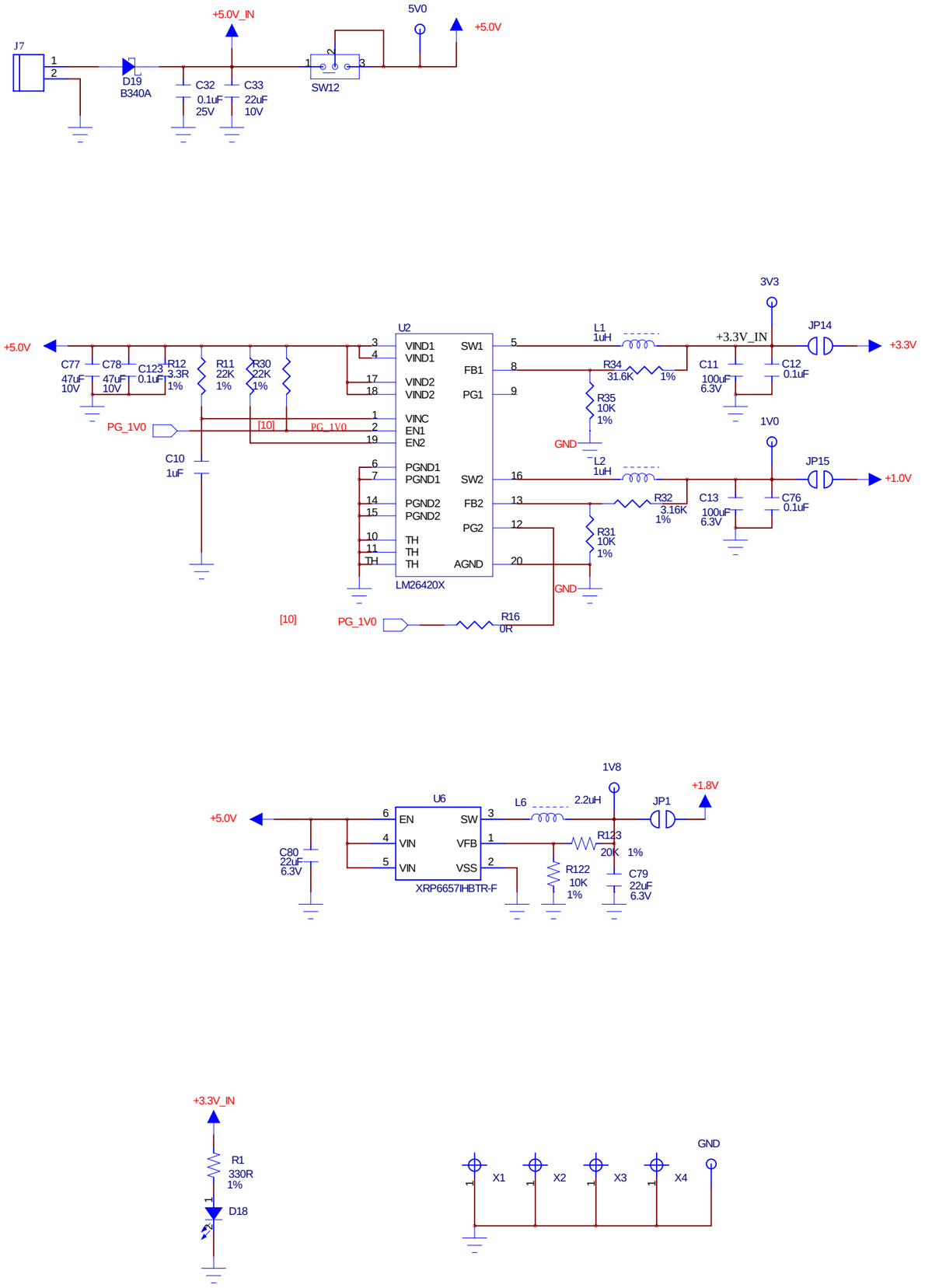

TITLE:	POWER				
Design :		DRAWING NO:			
CHECKED:					
STANDARDIZED:		VERSION:	SIZE: A3	SCALE:	SHEET: 10 OF 10
RELEASED:		E-ELEMENTS			