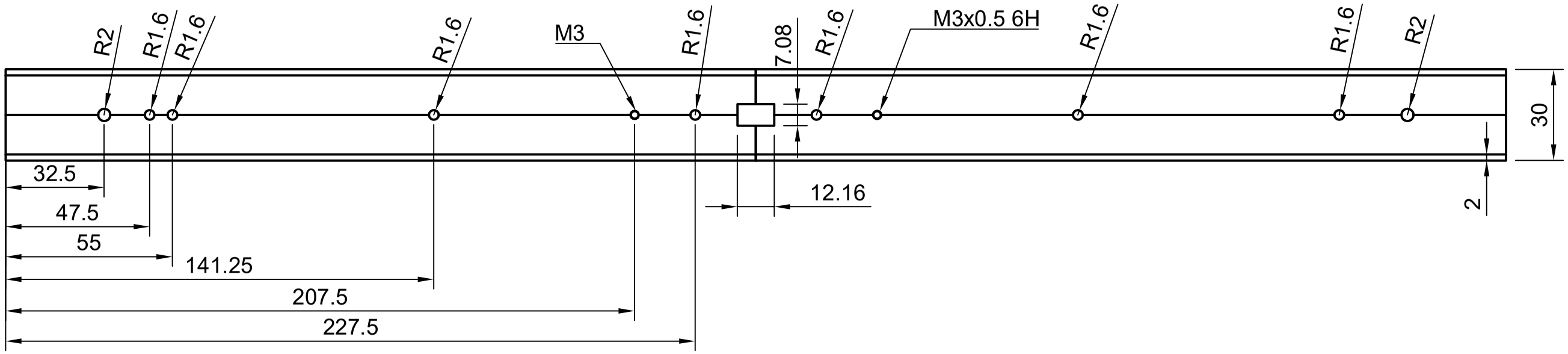

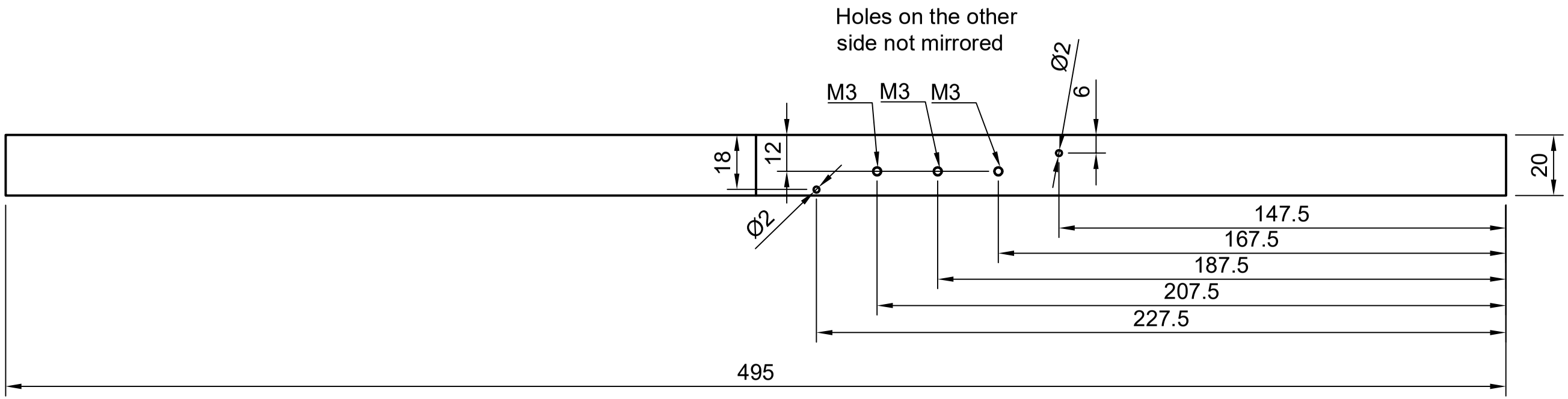

Dept.	Technical reference	Created by	Approved by
		Fabian Schwartau 31.10.2021	
		Document type	Document status
		Title main_profile	DWG No.
			Rev. / Date of issue / Sheet 1/1