— — Pages — —

PCIE_Slot
File: PCI_SLOT.kicad_sch

PCIE_POWER
File: PCIE_POWER.kicad_sch

PCIE_USB
File: PCIE_USB.kicad_sch

PCIE_CONFIG_GPIO
File: PCIE_GPIO.kicad_sch

LEDs
File: LEDs.kicad_sch

eMMC1
File: eMMC1.kicad_sch

eMMC2
File: eMMC2.kicad_sch

eMMC3
File: eMMC3.kicad_sch

eMMC4
File: eMMC4.kicad_sch

Greebles
File: greebles.kicad_sch

HTML Accelerator

9/15/2024

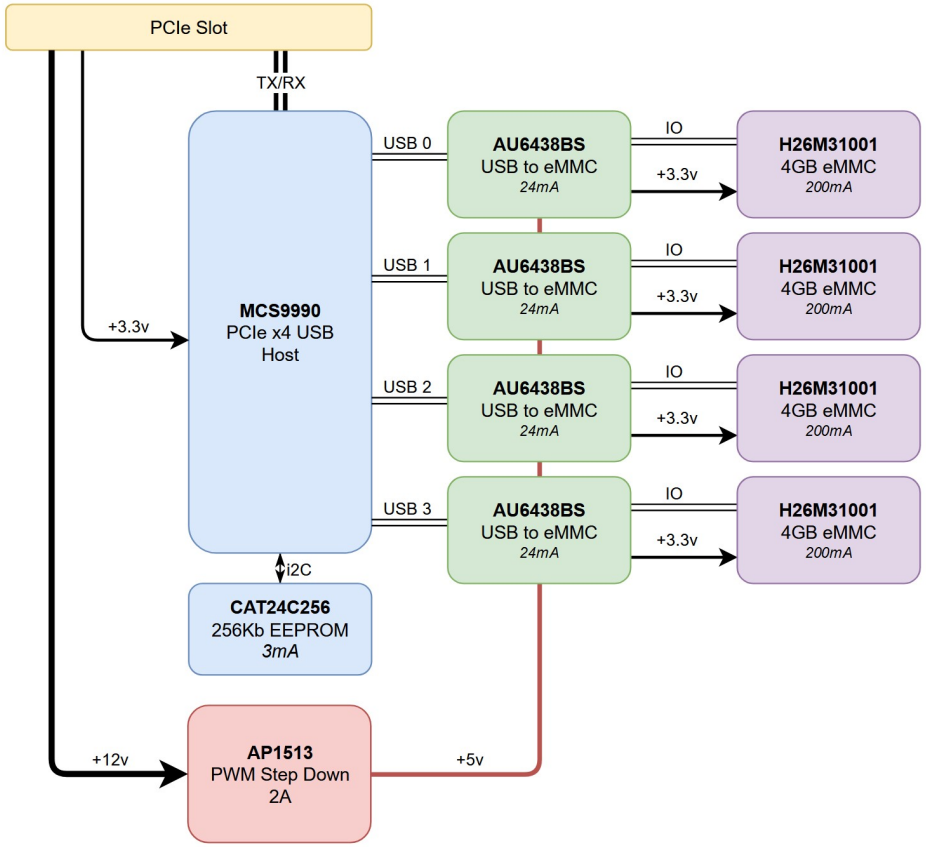

Sheet: /
File: html_accelerator.kicad_sch

Title: HTML Accelerator

Size: A4	Date: 2024-10-07	Rev: 1.0
KiCad E.D.A. 10.0.0		Id: 1/11

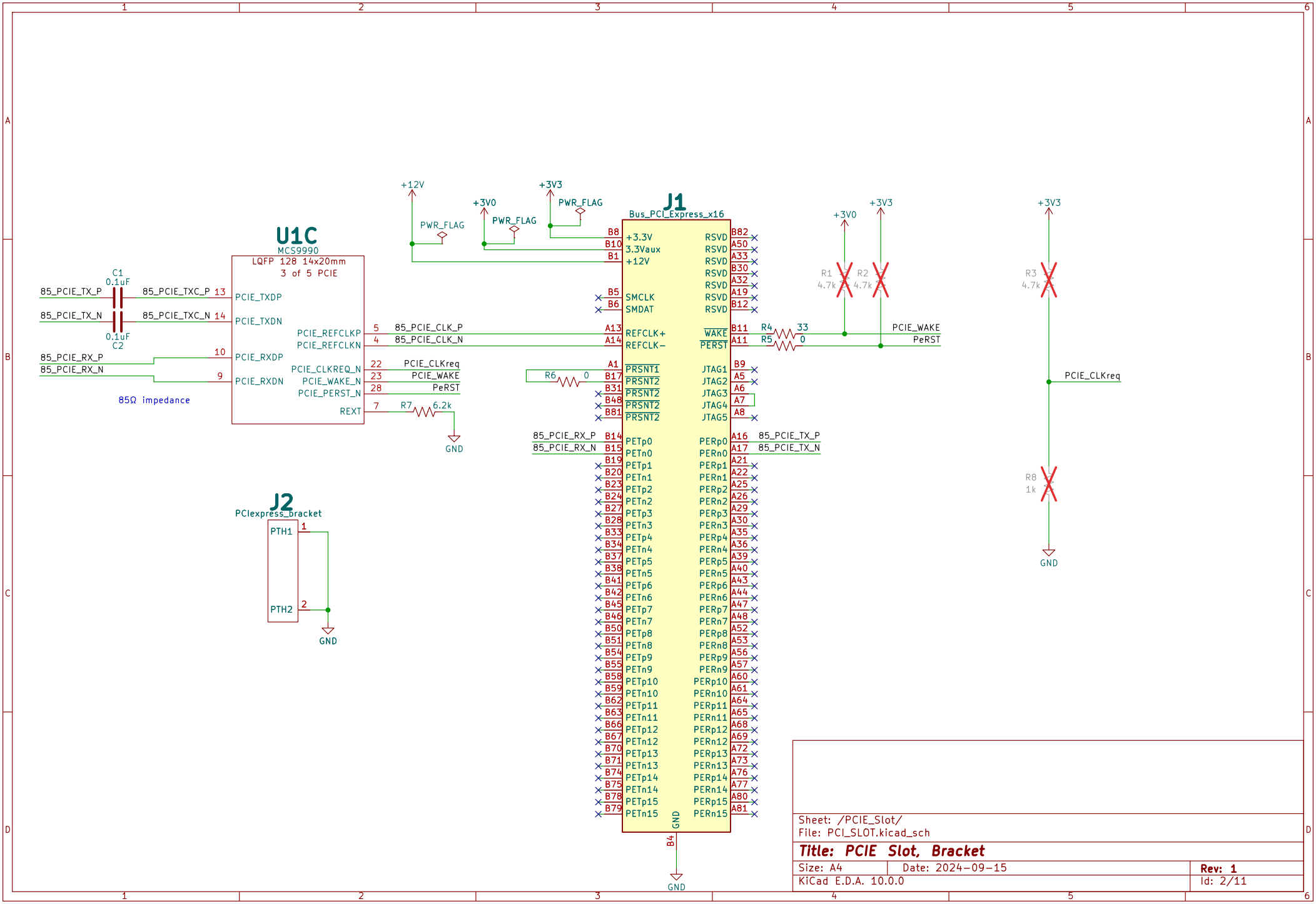

Sheet: /PCIE_Slot/
File: PCI_SLOT.kicad_sch

Title: PCIE Slot, Bracket

Size: A4	Date: 2024-09-15	Rev: 1
KiCad E.D.A. 10.0.0		Id: 2/11

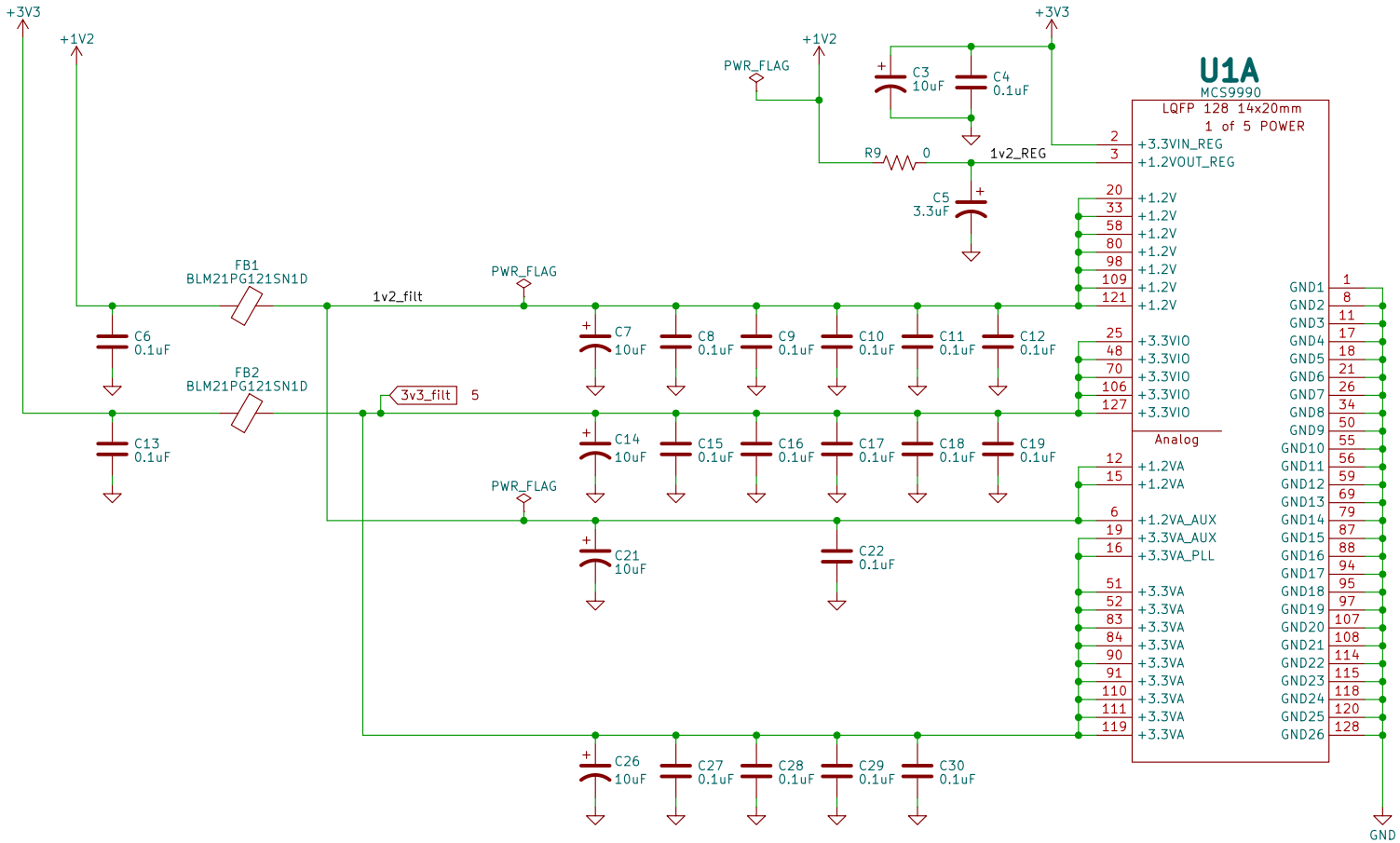

Sheet: /PCIE_POWER/
File: PCIE_POWER.kicad_sch

Title: 12v, 3v3, 1v2 Power, Buck

Size: A4	Date: 2024-09-15	Rev: 1
KiCad E.D.A. 10.0.0		Id: 3/11

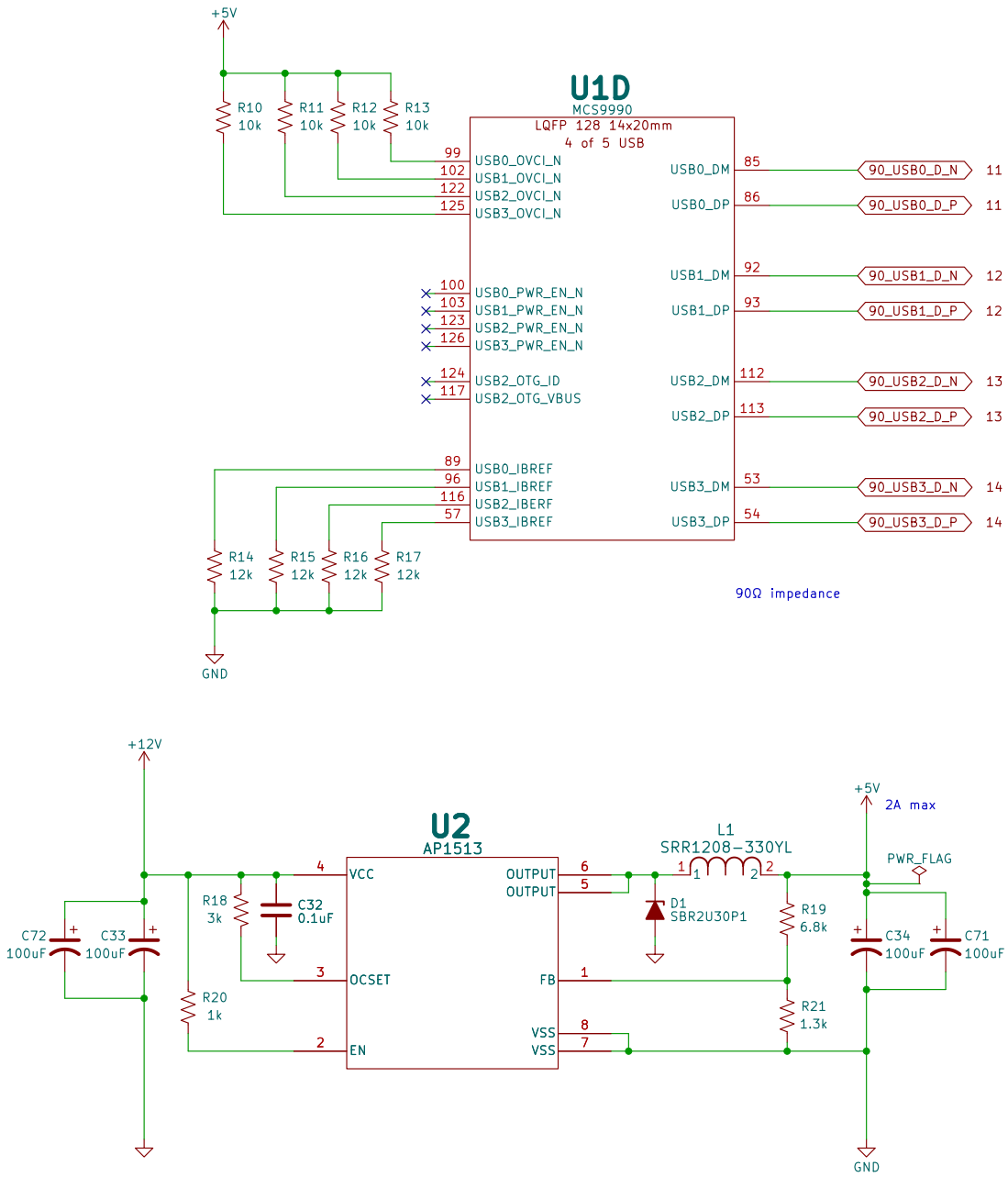

Sheet: /PCIE_USB/
File: PCIE_USB.kicad_sch

Title: USB, 5v POWER

Size: A4	Date: 2024-09-15	Rev: 1
KiCad E.D.A. 10.0.0		Id: 4/11

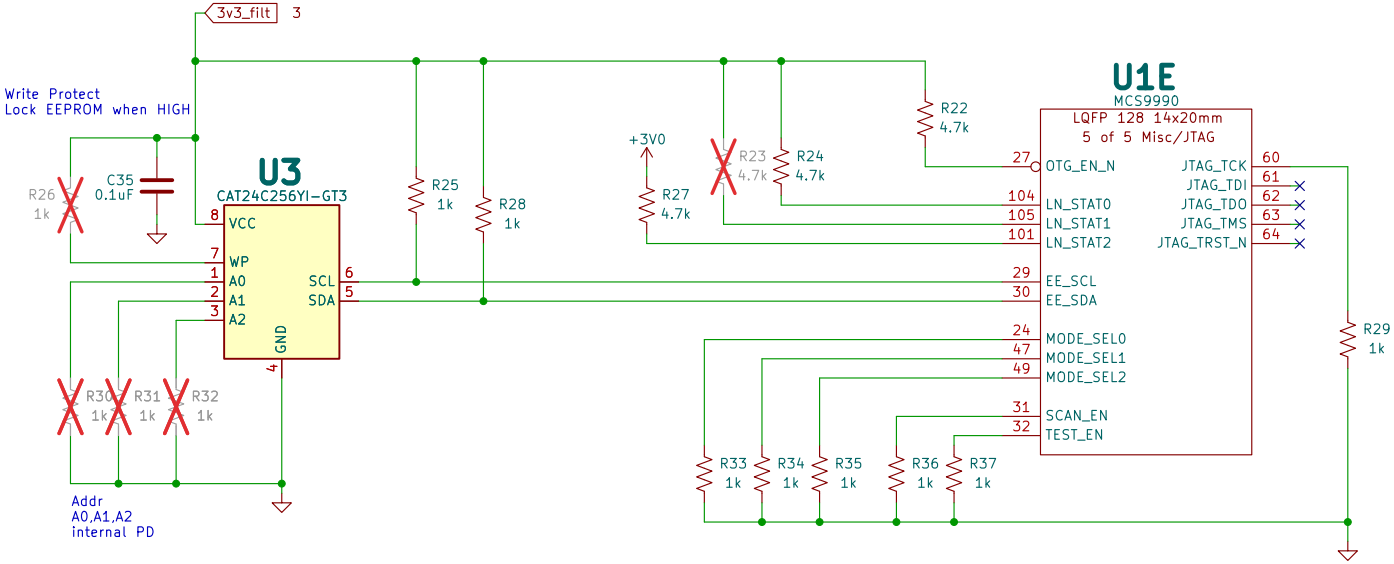

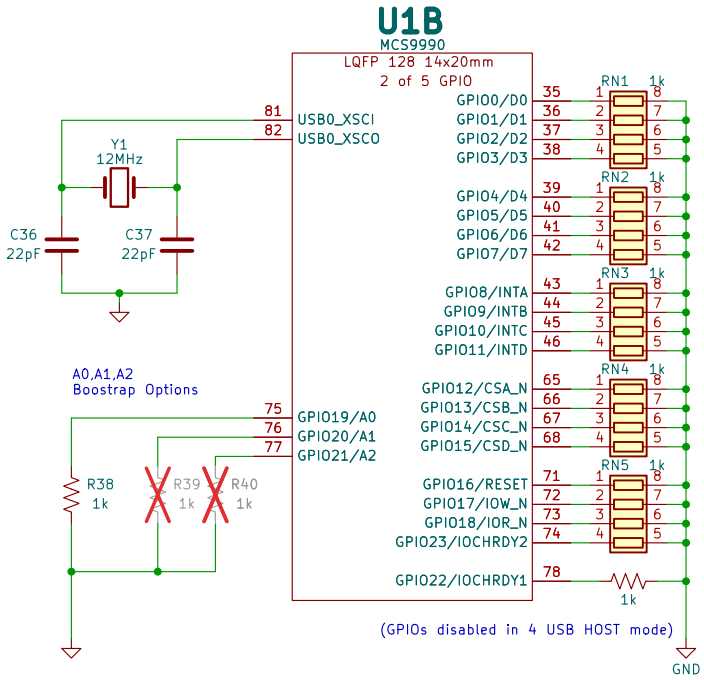

Mode Selection

MCS9990 supports following four functional modes, selectable through device mode select pins at board level. The I2C EEPROM is also required to be used in these modes.

Mode Selection	TEST_EN	MODE_SEL2	MODE_SEL1	MODE_SEL0	OTG_EN_N
4 USB Host	0	0	0	0	1
2 USB Host + OTG	0	0	0	1	0
2 USB Host + OTG + ISA	0	0	1	0	0
2 USB Host + OTG + GPIO	0	0	1	1	0

5. Bootstrap Options

In MCS9990, six bootstrap options are present.

Pin Name	Bootstrap	Internal PU/PD	Default External PU/PD	Description
LN_STAT0	PCIEXP_ERR_MSK	PD	PU	To mask PCIe error bits. By default logic 'Low' is present to mask error reporting
LN_STAT1	MAXRD_128BYTES	PD	Open	To set maximum read request size from EP to be 128 bytes by passing high logic on the line. By default logic 'Low' is present
LN_STAT2	AUX_POWER	PD	PU	For auxiliary power detection, connected to 'Vaux' detect circuit at board level. By default logic 'Low' is present
GPIO19	ASPM_CNTRL	PU	PD	To Provide ASPM support controllability. By default logic 'High' is present to enable ASPM
GPIO20	ADV_ERROR_REPORT	PU	Open	To provide Advance Error Report support controllability. By default logic 'High' is present to enable the feature.
GPIO21	WAKE_HIB_EN	PU	Open	To provide wake from D3 Cold (Hibernate) state through device connected under USB host. By default logic 'High' is present to disable this feature. To enable the feature provide weak pull down at board level.

Sheet: /PCIE_CONFIG_GPIO/
File: PCIE_GPIO.kicad_sch

Title: EEPROM, CFG, GPIO

Size: A4 | Date: 2024-09-15 | **Rev: 1**
KiCad E.D.A. 10.0.0 | Id: 5/11

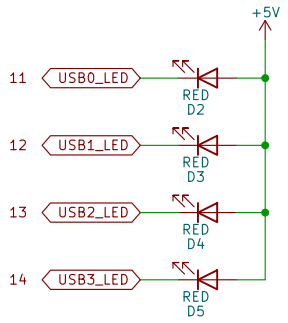

Sheet: /LEDs/
File: LEDs.kicad_sch

Title: USB, 5v POWER

Size: A4	Date: 2024-09-15	**Rev: 1**
KiCad E.D.A. 10.0.0		Id: 6/11

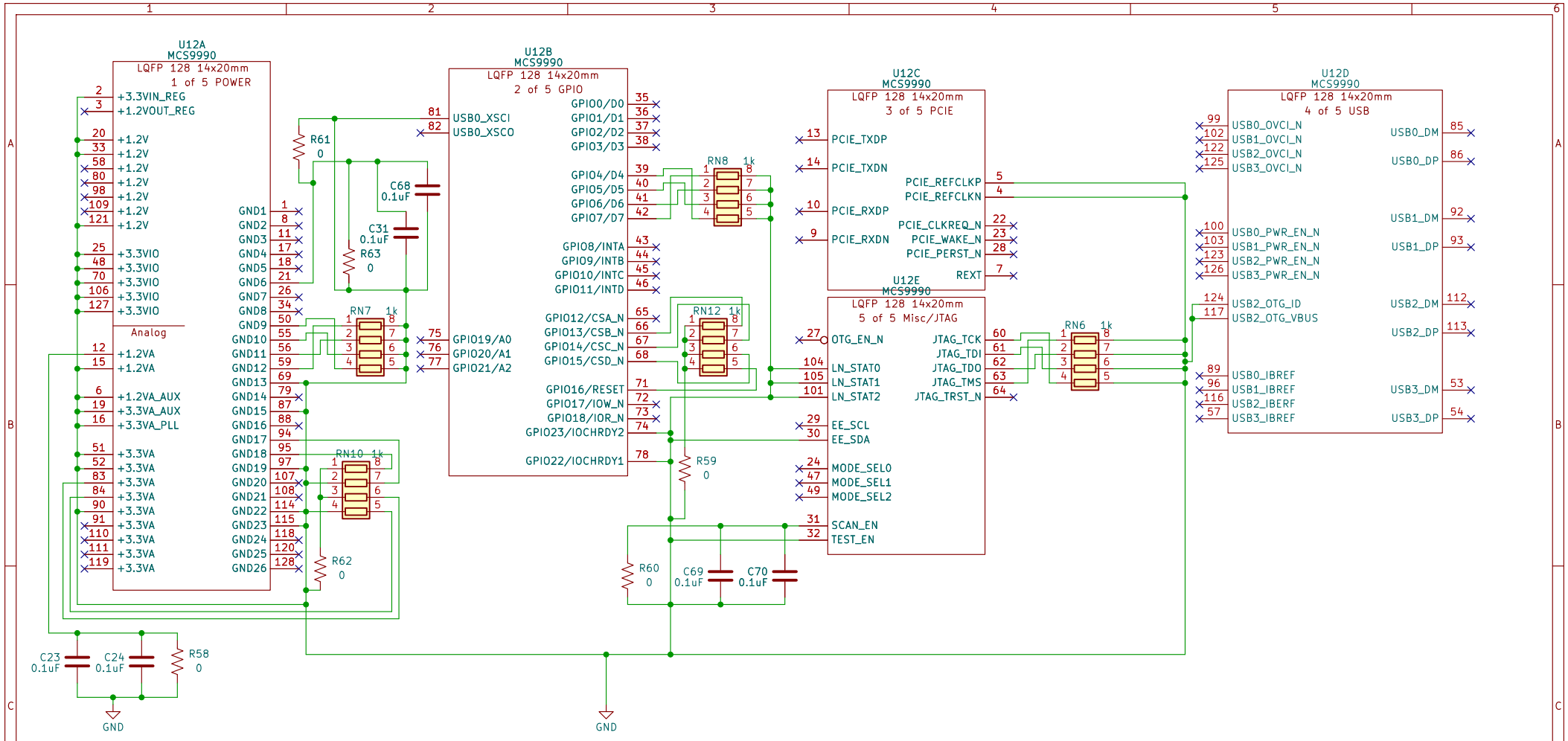

Nothing on this page does anything at all, it is just for decoration :)

Sheet: /Greebles/
File: greebles.kicad_sch

Title: USB, 5v POWER

Size: A4	Date: 2024-09-15	Rev: 1
KiCad E.D.A. 10.0.0		Id: 7/11

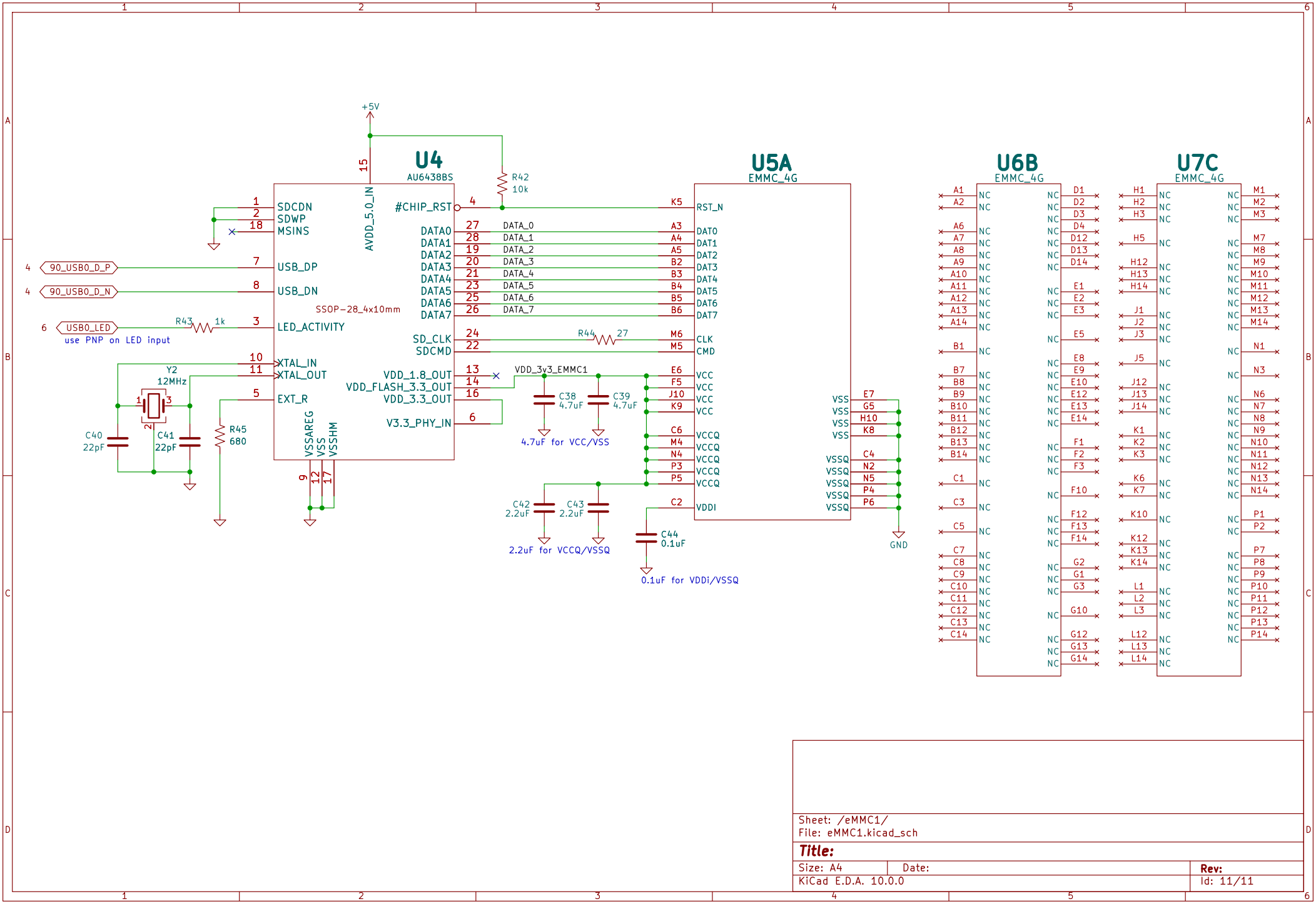

Sheet: /eMMC1/
File: eMMC1.kicad_sch

Title:

Size: A4	Date:	Rev:
KiCad E.D.A. 10.0.0		Id: 11/11

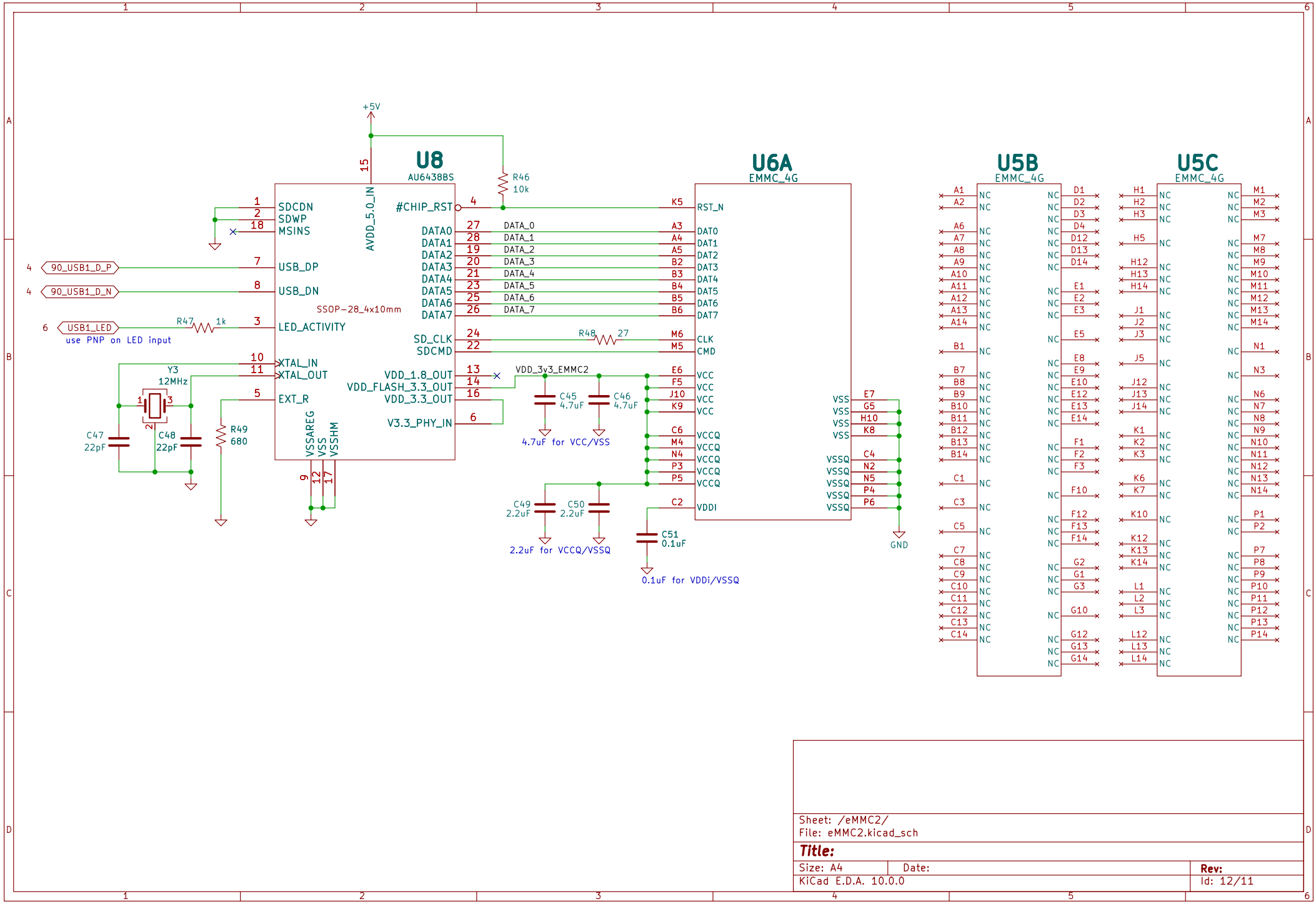

Sheet: /eMMC2/
File: eMMC2.kicad_sch

Title:

Size: A4	Date:	Rev:
KiCad E.D.A. 10.0.0		Id: 12/11

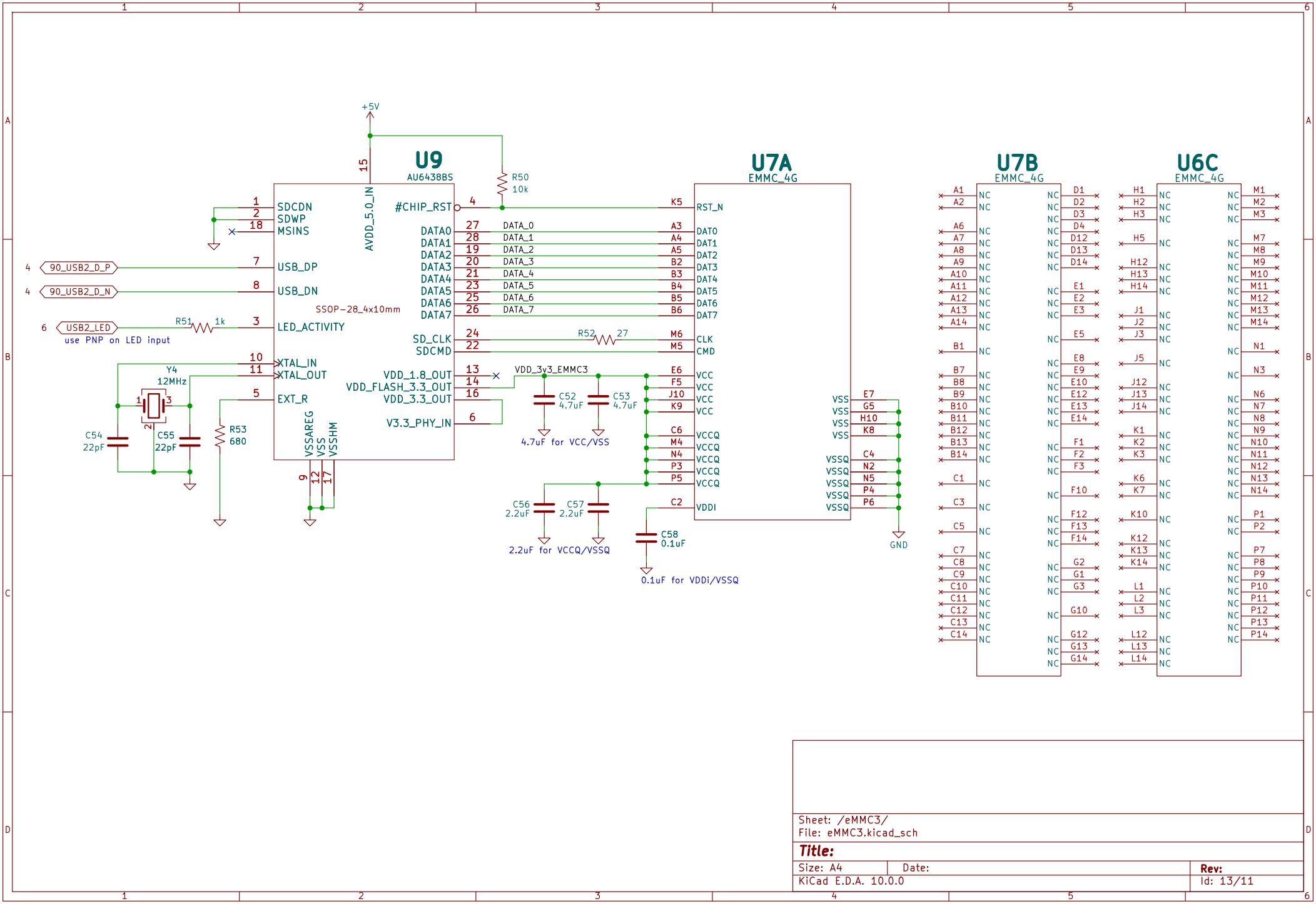

Sheet: /eMMC3/
File: eMMC3.kicad_sch

Title:

Size: A4	Date:	Rev:
KiCad E.D.A. 10.0.0		Id: 13/11

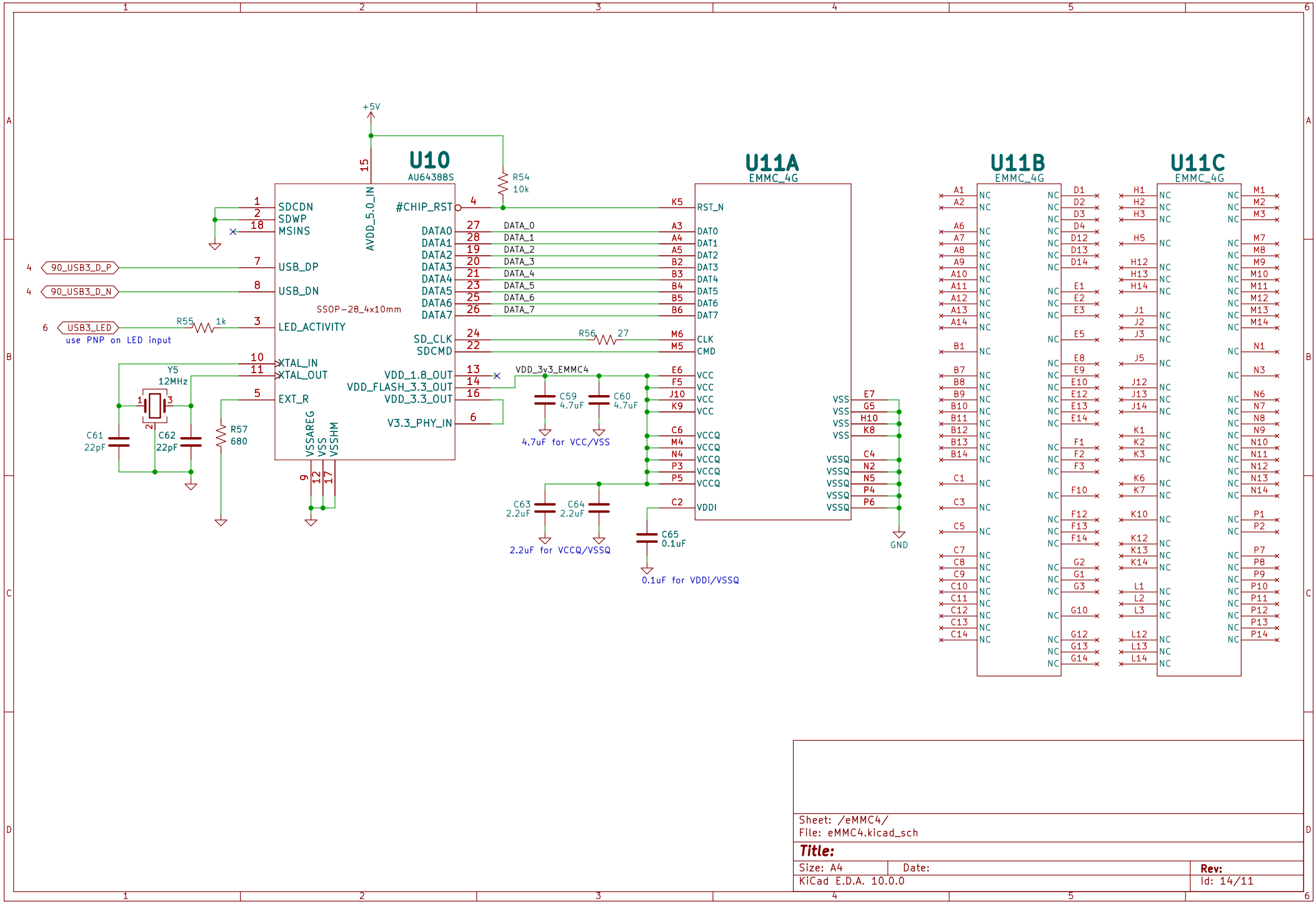

Sheet: /eMMC4/
File: eMMC4.kicad_sch

Title:

Size: A4	Date:	Rev:
KiCad E.D.A. 10.0.0		Id: 14/11