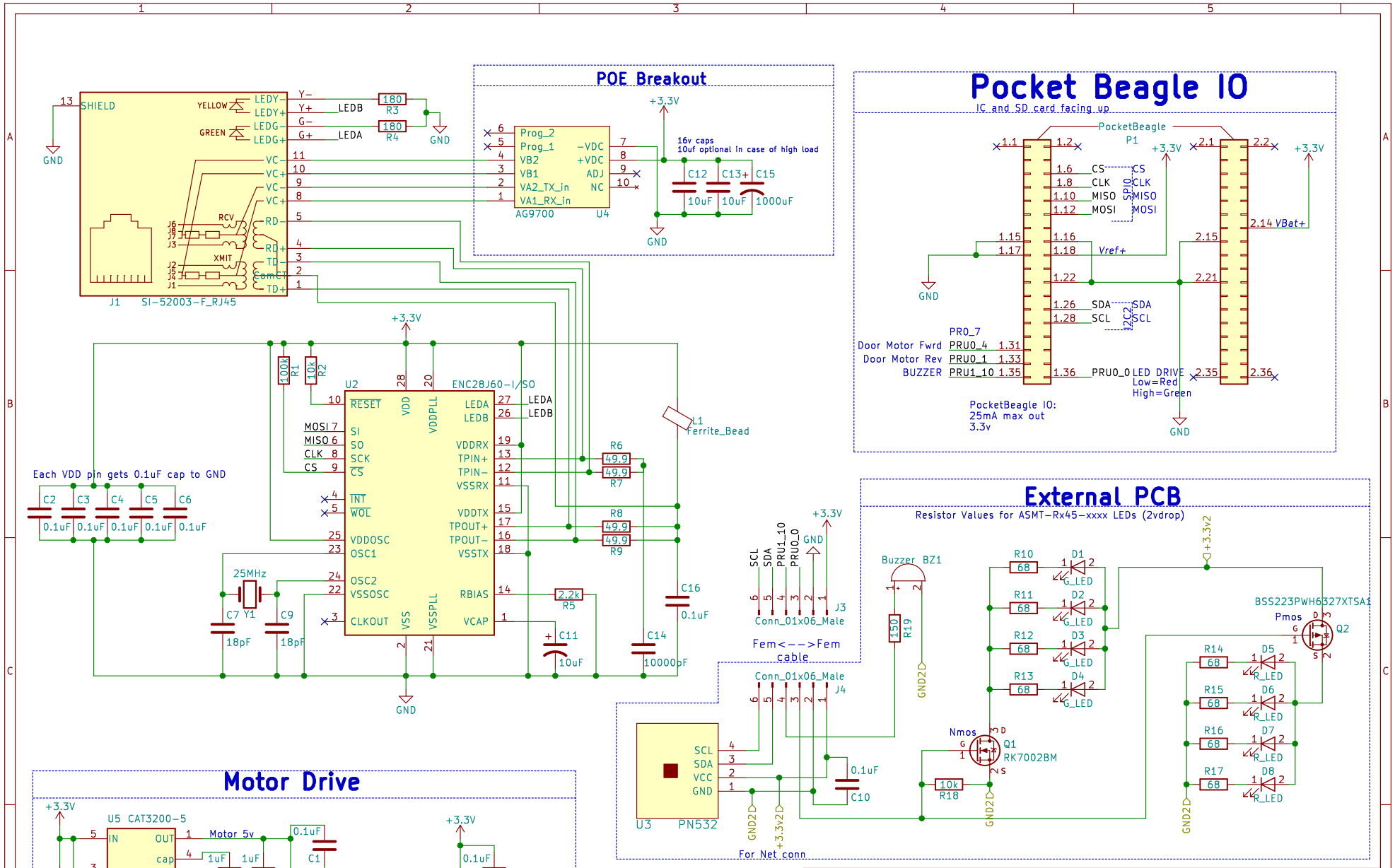

GitHub URL: https://github.com/akaStanley/TalDoor

ADD URL OF CSH REPO

NFC Door lock hardware with POE support for the Pocket Beagle Devboard

Spencer Kulbacki – Computer Science House

Sheet: /

File: TalDoor.sch

Title: TalDoor Schematic

Size: USLetter	Date: 2018-01-06	**Rev: 1**
KiCad E.D.A. kicad 4.0.7		Id: 1/1