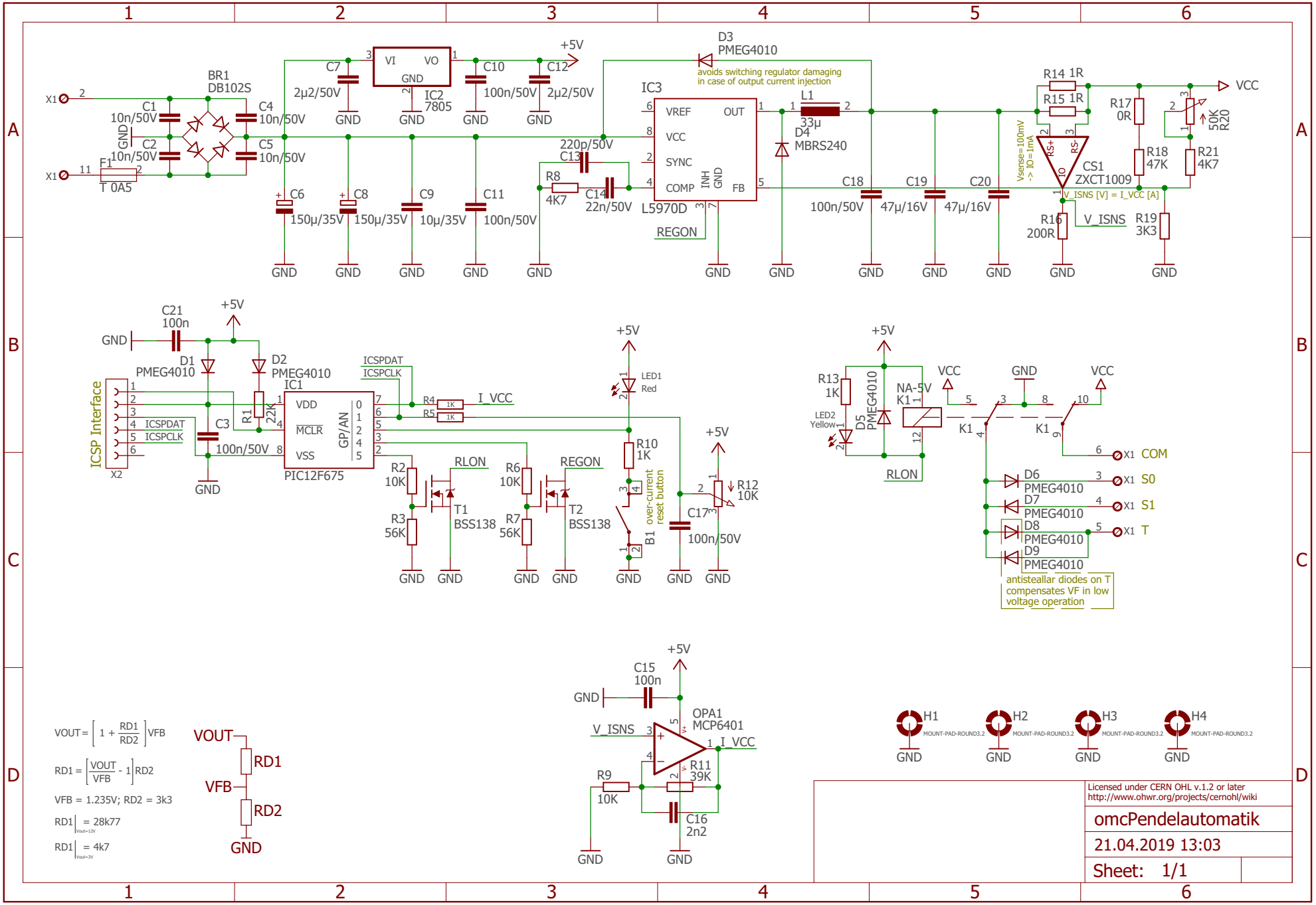

$$VOUT = \left[1 + \frac{RD1}{RD2}\right] VFB$$

$$RD1 = \left[\frac{VOUT}{VFB} - 1\right] RD2$$

VFB = 1.235V; RD2 = 3k3

$RD1\big|_{Vout=12V}$ = 28k77

$RD1\big|_{Vout=3V}$ = 4k7

Licensed under CERN OHL v.1.2 or later
http://www.ohwr.org/projects/cernohl/wiki

omcPendelautomatik

21.04.2019 13:03

Sheet: 1/1