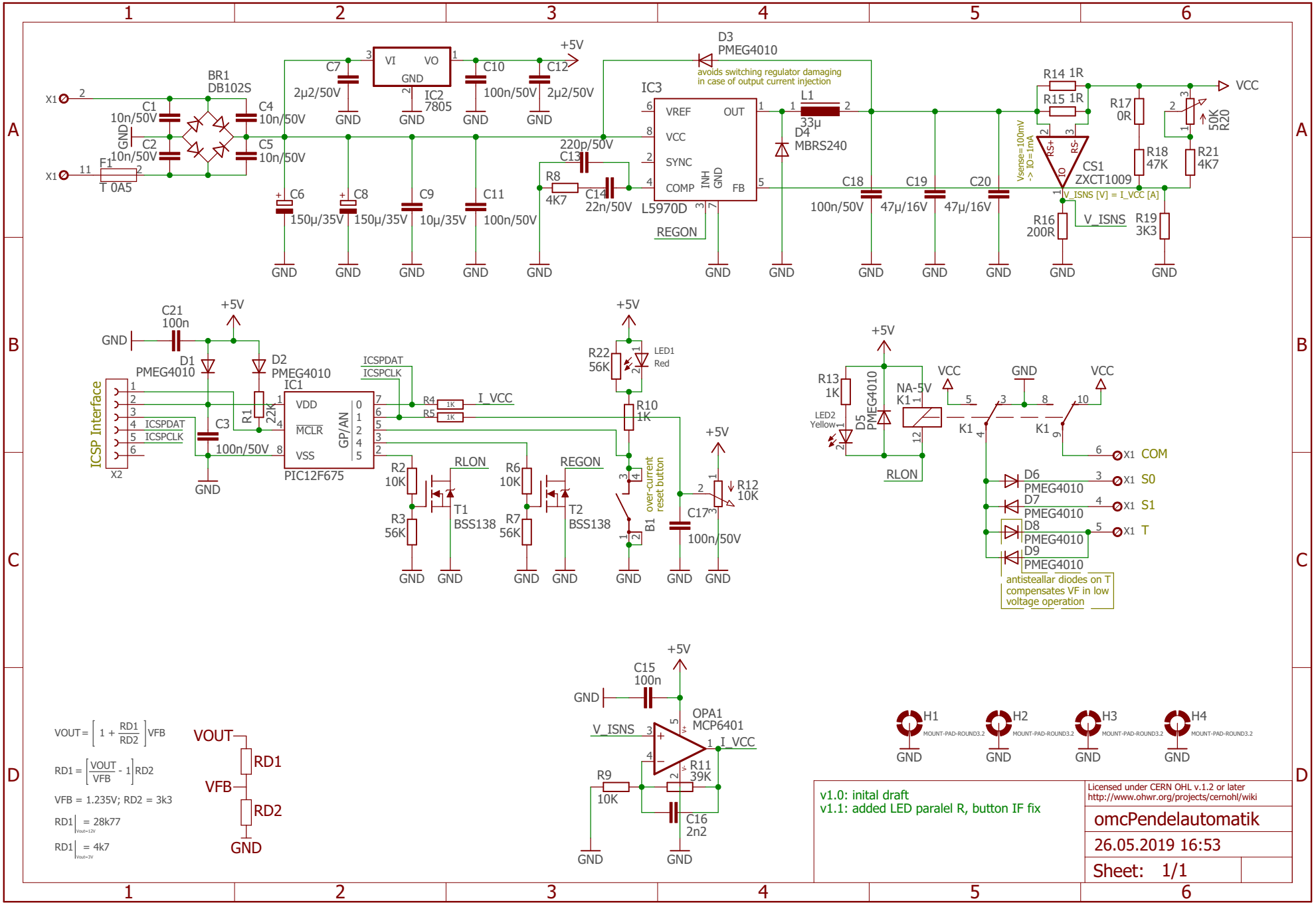

v1.0: inital draft
v1.1: added LED paralel R, button IF fix

Licensed under CERN OHL v.1.2 or later
http://www.ohwr.org/projects/cernohl/wiki

omcPendelautomatik

26.05.2019 16:53

Sheet: 1/1