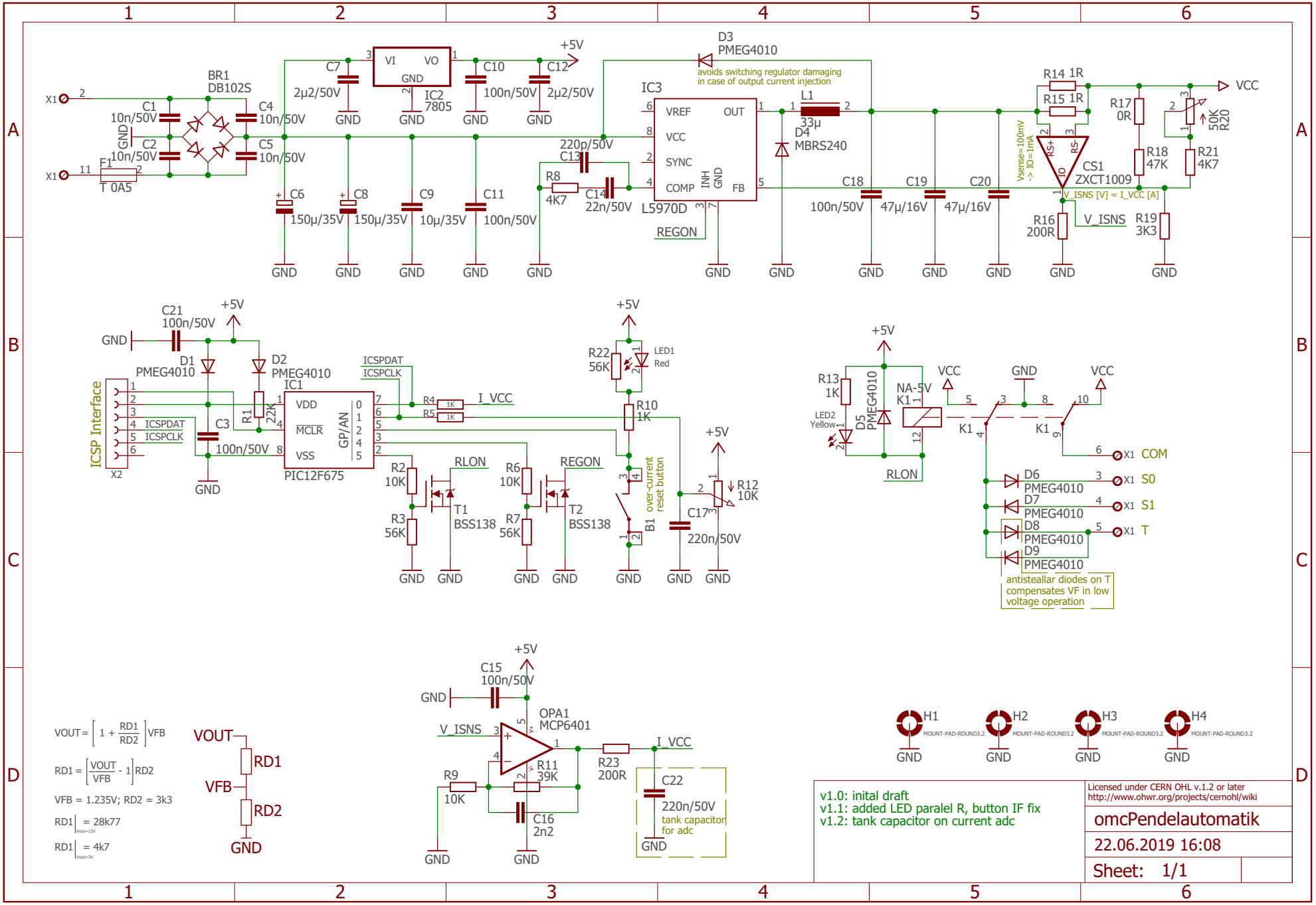
X1
F1
T 0A5
BR1
DB102S
C1
10n/50V
C2
10n/50V
C4
10n/50V
C5
10n/50V
GND
C7
2µ2/50V
IC2
7805
VI
VO
GND
C10
100n/50V
C12
2µ2/50V
+5V
C6
150µ/35V
C8
150µ/35V
C9
10µ/35V
C11
100n/50V
D3
PMEG4010
avoids switching regulator damaging in case of output current injection
IC3
VREF
VCC
SYNC
COMP
OUT
FB
INH
GND
L5970D
REGON
C13
220p/50V
R8
4K7
C14
22n/50V
L1
33µ
D4
MBRS240
C18
100n/50V
C19
47µ/16V
C20
47µ/16V
R14 1R
R15 1R
Vsense=100mV -> IO=1mA
RS+
RS-
IO
CS1
ZXCT1009
V_ISNS [V] = I_VCC [A]
R16
200R
V_ISNS
R17
0R
R18
47K
R19
3K3
R20
50K
R21
4K7
VCC
C21
100n/50V
D1
PMEG4010
D2
PMEG4010
ICSP Interface
X2
ICSPDAT
ICSPCLK
C3
100n/50V
R1
22K
IC1
VDD
MCLR
VSS
GP/AN
PIC12F675
R4 1K
R5 1K
I_VCC
R22
56K
LED1
Red
R10
1K
R2
10K
R3
56K
RLON
T1
BSS138
R6
10K
R7
56K
REGON
T2
BSS138
B1
over-current reset button
C17
220n/50V
R12
10K
R13
1K
LED2
Yellow
D5
PMEG4010
NA-5V
K1
COM
S0
S1
T
D6
PMEG4010
D7
PMEG4010
D8
PMEG4010
D9
PMEG4010
antisteallar diodes on T compensates VF in low voltage operation
C15
100n/50V
OPA1
MCP6401
V_ISNS
R9
10K
R11
39K
C16
2n2
R23
200R
C22
220n/50V
tank capacitor for adc
H1
H2
H3
H4
MOUNT-PAD-ROUND3.2
VOUT
RD1
VFB
RD2
VOUT = [1 + RD1/RD2] VFB
RD1 = [VOUT/VFB - 1] RD2
VFB = 1.235V; RD2 = 3k3
RD1 = 28k77
RD1 = 4k7
v1.0: inital draft
v1.1: added LED paralel R, button IF fix
v1.2: tank capacitor on current adc
Licensed under CERN OHL v.1.2 or later
http://www.ohwr.org/projects/cernohl/wiki
omcPendelautomatik
22.06.2019 16:08
Sheet: 1/1