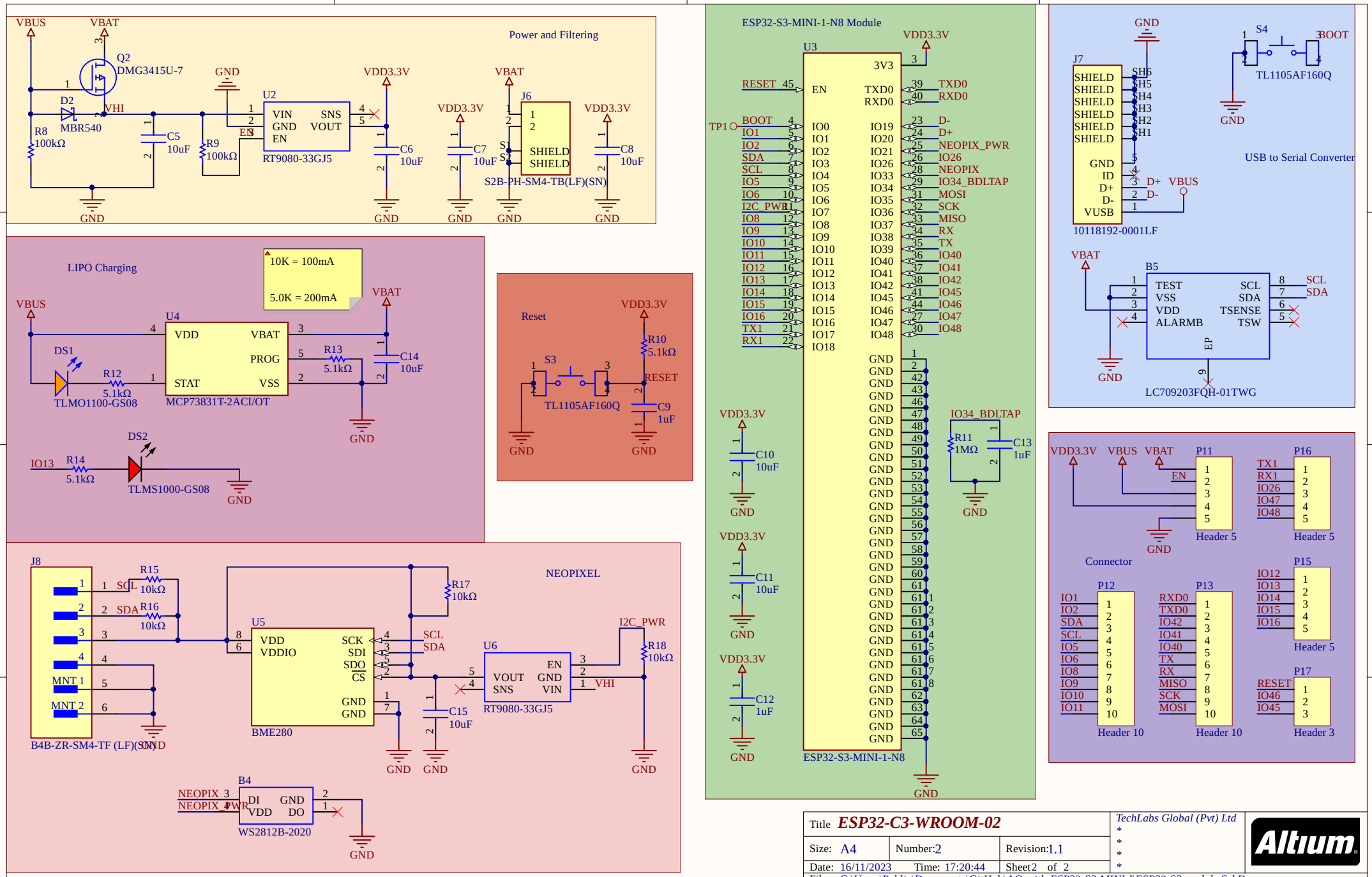

Title	ESP32-C3-WROOM-02		TechLabs Global (Pvt) Ltd
Size: A4	Number:2	Revision:1.1	
Date: 16/11/2023	Time: 17:20:44	Sheet2 of 2	
File: C:\Users\Public\Documents\GitHub\AQ-with-ESP32-S3-MINI-I\ESP32-S3 module.SchDoc			