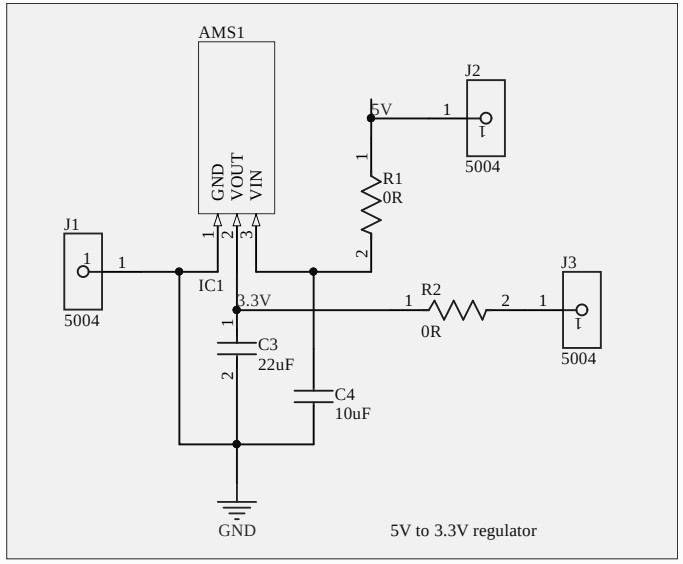

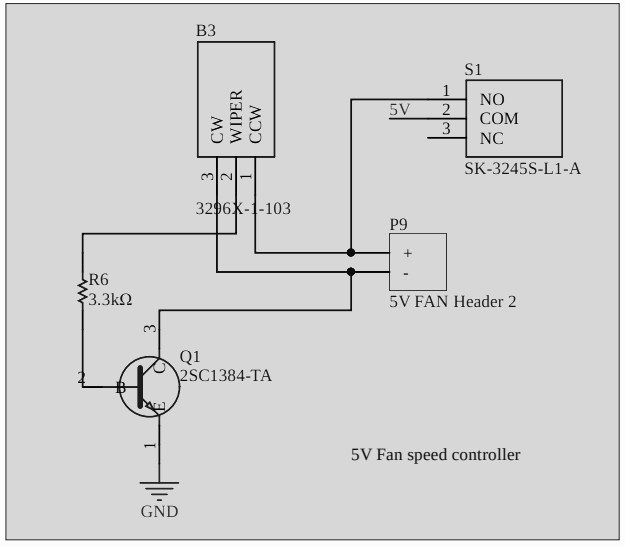

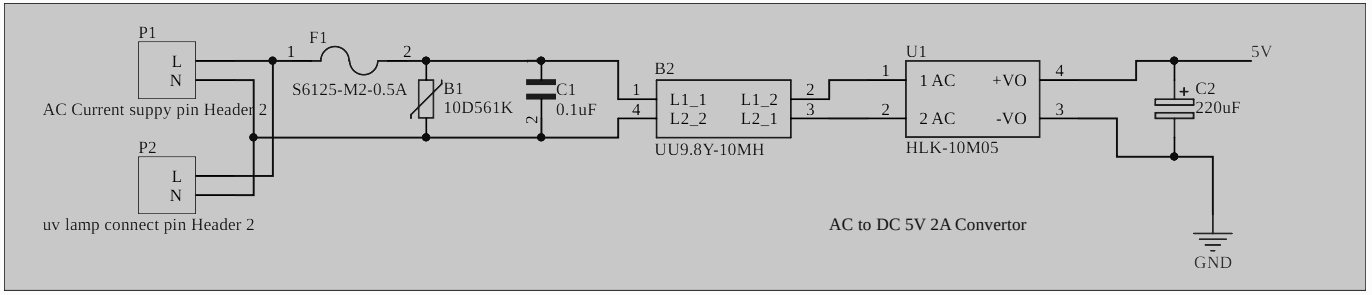

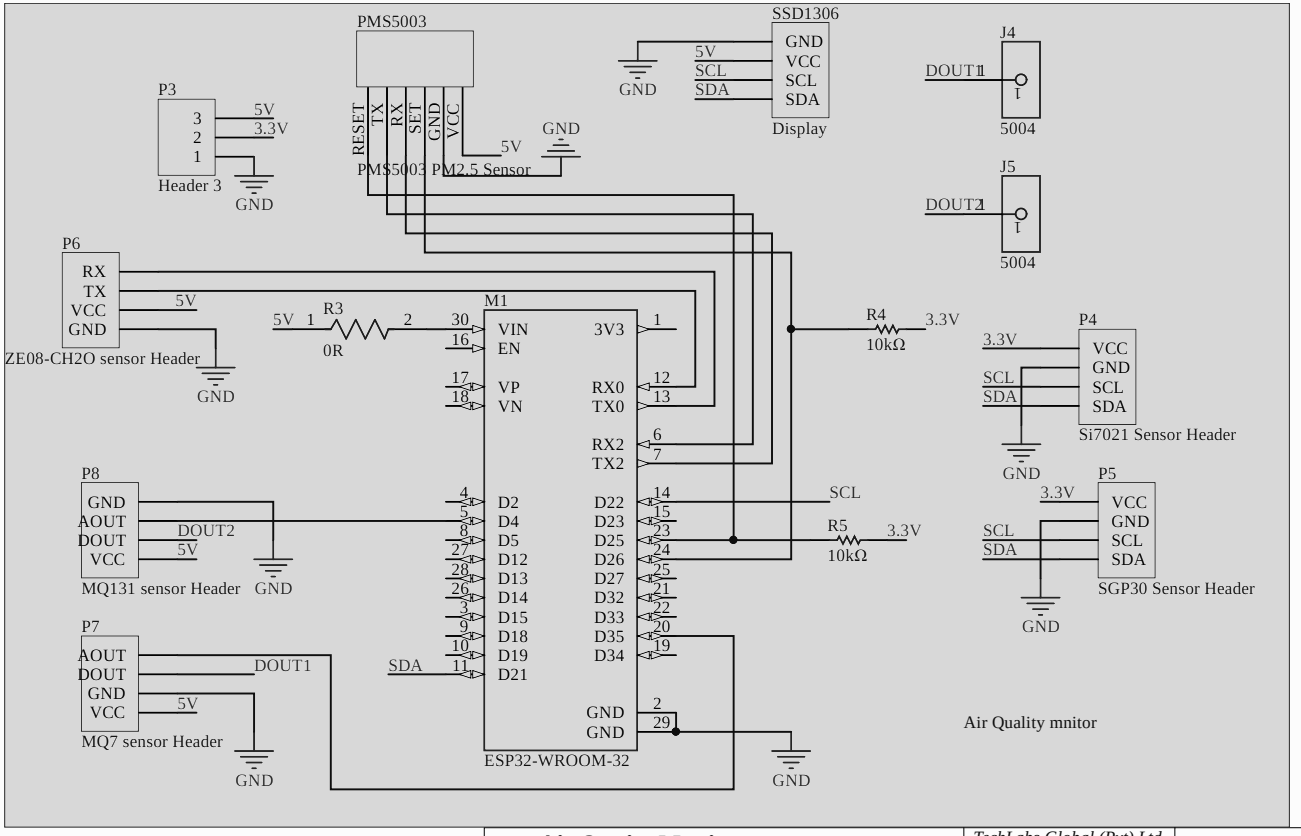

Title *Air Quaity Monitor*			*TechLabs Global (Pvt) Ltd*
Size: A4	Number:1	Revision:1.0	*
Date: 19/12/2022	Time: 16:53:47	Sheet1 of 1	*
File: C:\Users\Public\Documents\GitHub\Air-Qulity-monitor\air qulity Small1\air qulity monitor.SchDoc			*