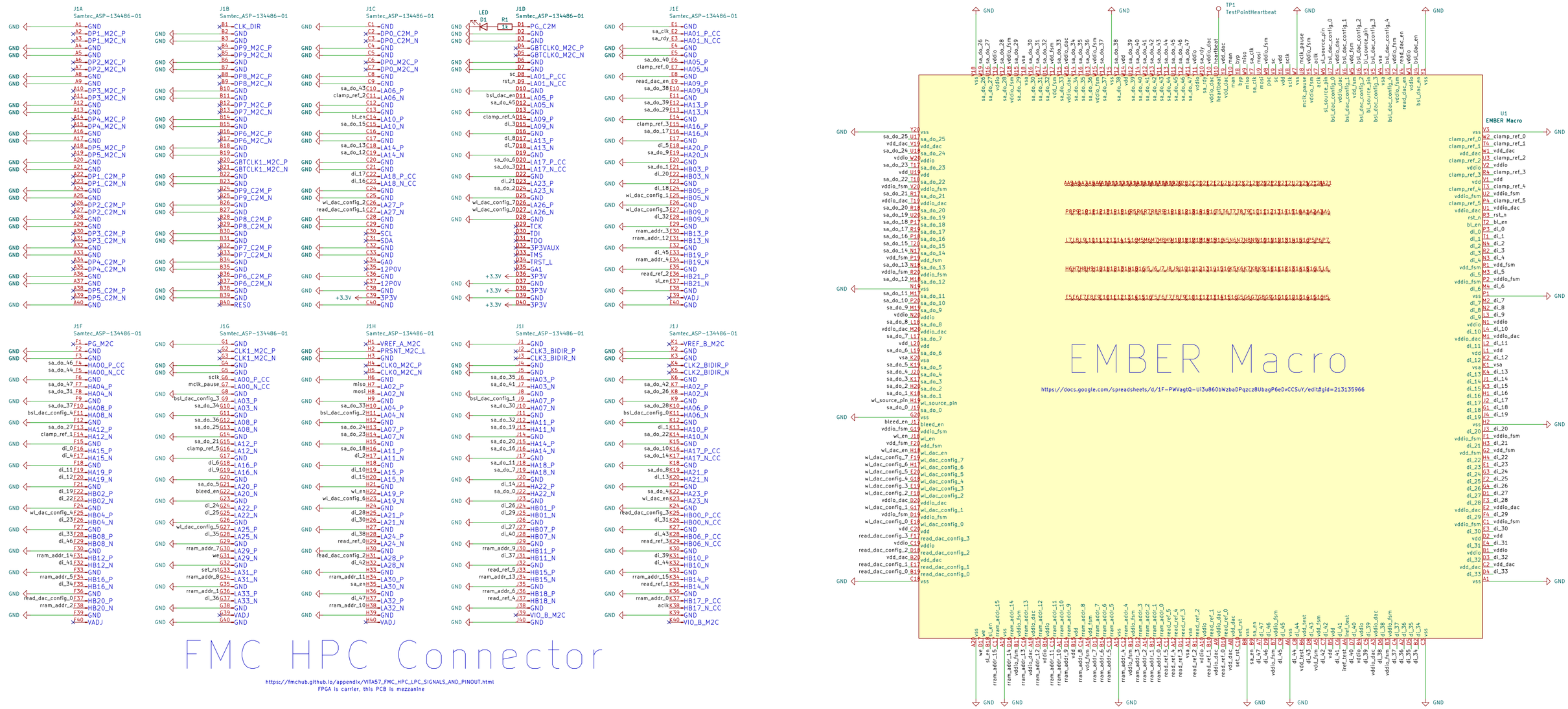

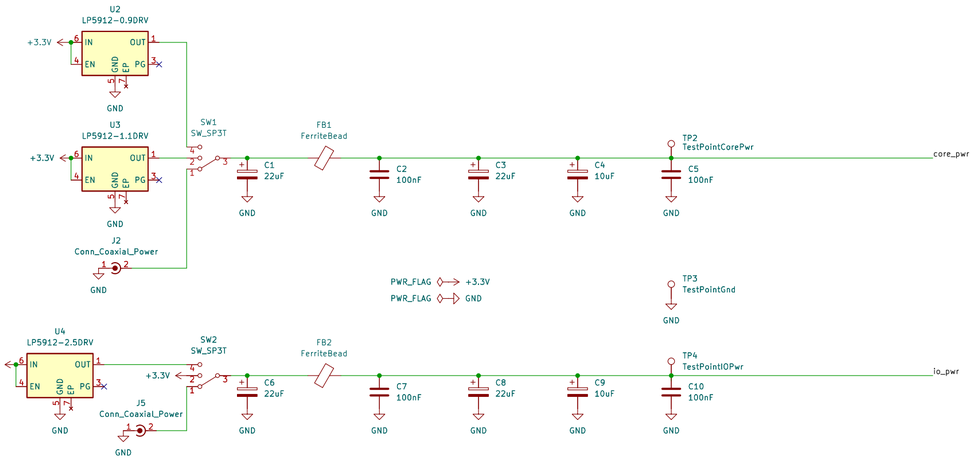

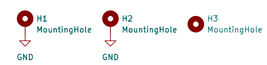

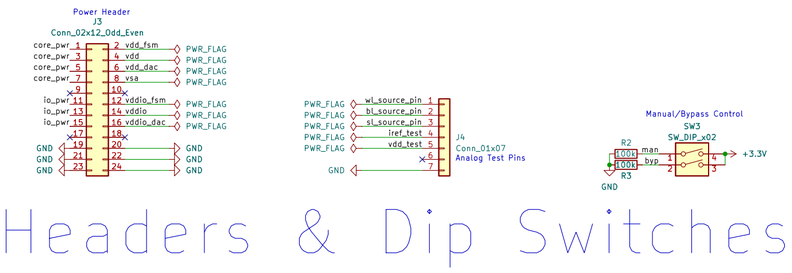

Stanford University

Sheet: /

File: ember-pcb.kicad_sch

Title: EMBER PCB Schematic

Size: A2	Date: 2022-10-13	Rev:
KiCad E.D.A. kicad (6.0.7-1)-1		Id: 1/1