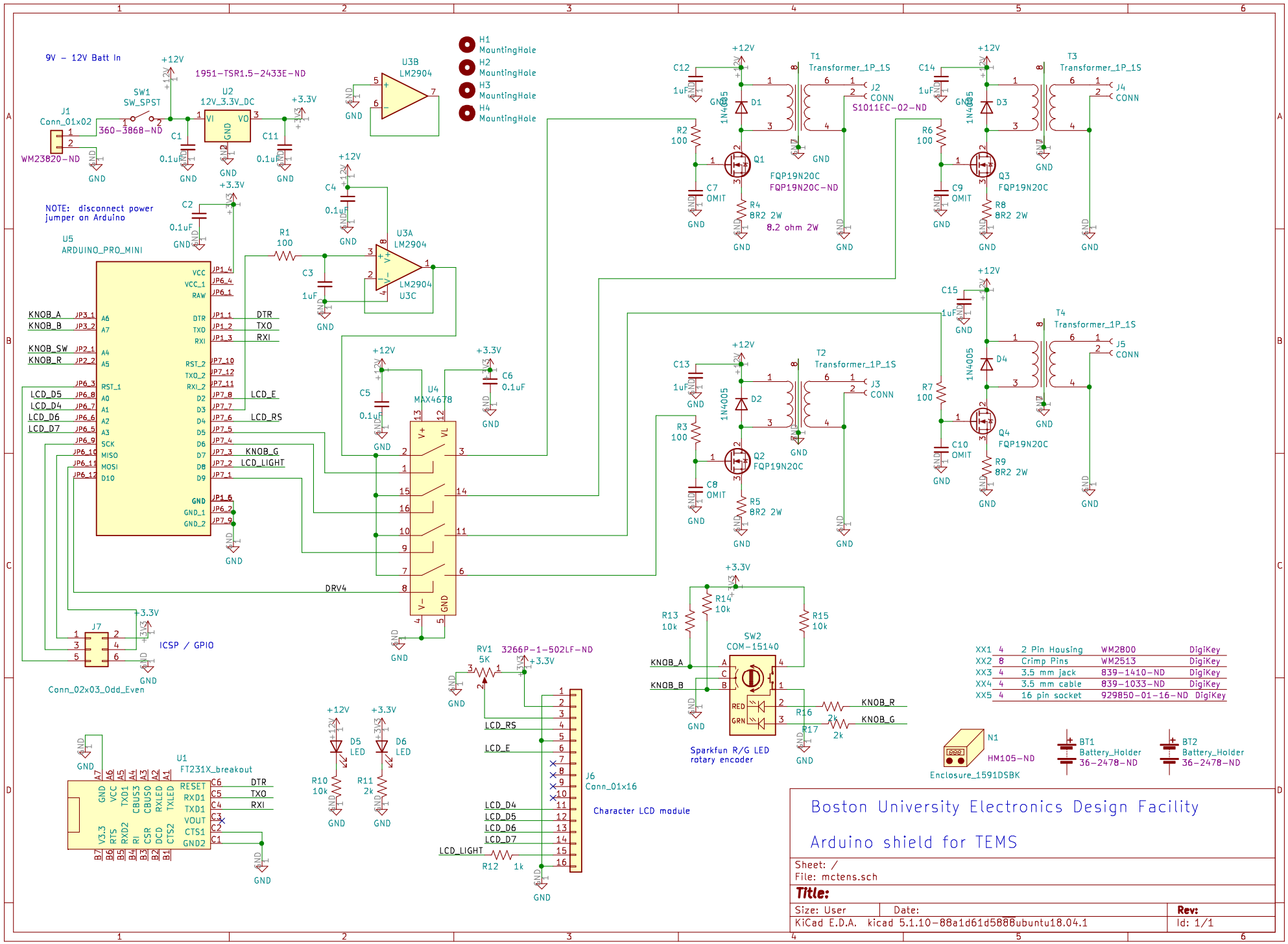

XX1	4	2 Pin Housing	WM2800	DigiKey
XX2	8	Crimp Pins	WM2513	DigiKey
XX3	4	3.5 mm jack	839-1410-ND	DigiKey
XX4	4	3.5 mm cable	839-1033-ND	DigiKey
XX5	4	16 pin socket	929850-01-16-ND	DigiKey

Boston University Electronics Design Facility

Arduino shield for TEMS

Sheet: /
File: mctens.sch

Title:

Size: User	Date:	Rev:
KiCad E.D.A. kicad 5.1.10-88a1d61d5888ubuntu18.04.1		Id: 1/1