Technical catalog

BENKAM
ALU ARCHITECTS

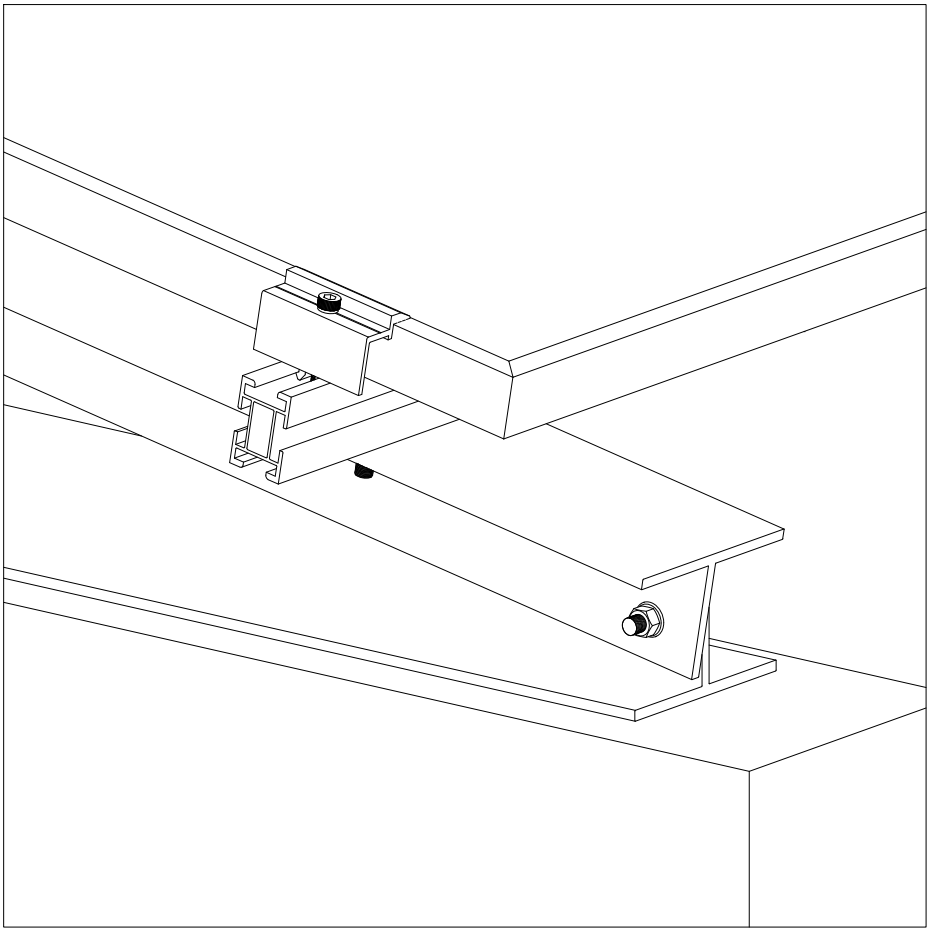

BKSP 98

Solar Panel system

BENKAM Alu Architects
Catalog version: 001
Date of publication: 2025 version

1. System description

2. Profile section

3. Accessories and components

4. Solutions for flat roofs

5. Solutions for pitched roofs

6. Fabrication and Assembly Instructions

7. Notes

BENKAM
ALU ARCHITECTS

BKSP 98

1 System description

System Description

The aluminum profile system for solar panel mounting is a structural solution designed to ensure the stable, safe, and long-term operation of photovoltaic (PV) modules. This system consists of load-bearing aluminum profiles, fastening components (such as clamps, bolts, and brackets), and base supports that are adaptable to rooftops, ground installations, or vertical facades.

The mounting system provides resistance against:

- wind loads,
- snow loads,
- seismic activity,
- and temperature fluctuations.

It is suitable for various installation environments, including sloped roofs, flat roofs, open-field ground mounts, and building-integrated (BIPV) façade systems. The structure is designed to optimize the tilt angle of the solar panels, increasing energy efficiency while simplifying the installation process.

The primary material of the system is high-strength, corrosion-resistant aluminum alloy 6063-T5 or 6061-T6, which is widely used in the solar and construction industries. The surface of the profiles is anodized or powder-coated to enhance durability against harsh environmental conditions.

The system features a modular design, allowing flexibility for different panel sizes and project-specific configurations. The pre-engineered components are lightweight and easy to assemble, significantly reducing on-site labor and installation time. No specialized tools are required, making it user-friendly and efficient for both residential and commercial solar projects.

BENKAM

ALU ARCHITECTS

BKSP 98

2 Profile section

BKSP 98

Art №	Component	Connector Profile	Weight (kg/m)	Cr.Sec Area (mm^2)	Perimeter (mm)	Jx (cm^4)	Jy (cm^4)	Lenght
SSP.98.F0001	SS980001	---	0.481	178.15	174.14	---	---	6
SSP.98.F0002	SS980002	---	0.473	175.15	176.14	---	---	6
SSP.98.MR001	SS980003	---	0.844	312.54	205.47	1.60	7.11	6
SSP.98.MR002	SS980004	---	1.450	536.94	307.47	36.63	10.80	6

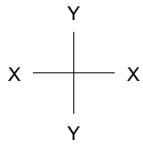

SSP.98.F0001

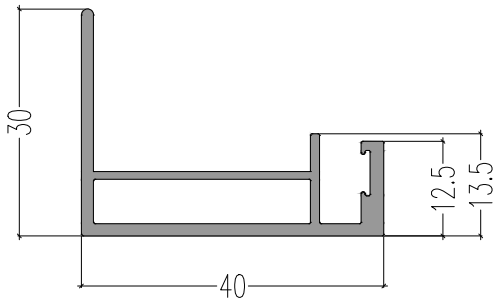

SSP.98.F0002

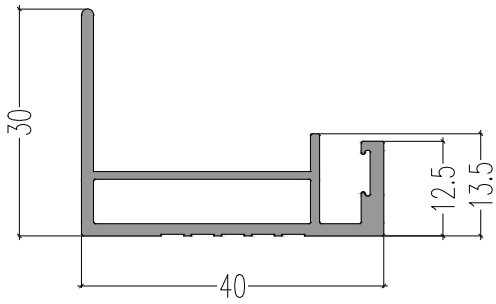

SSP.98.MR001

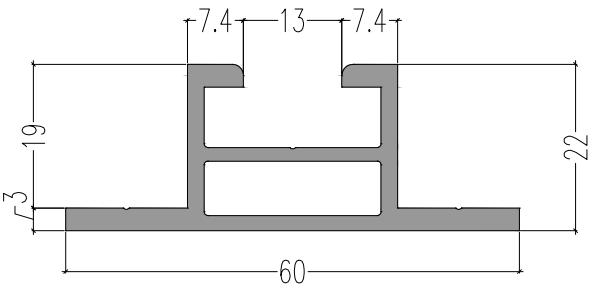

SSP.98.MR002

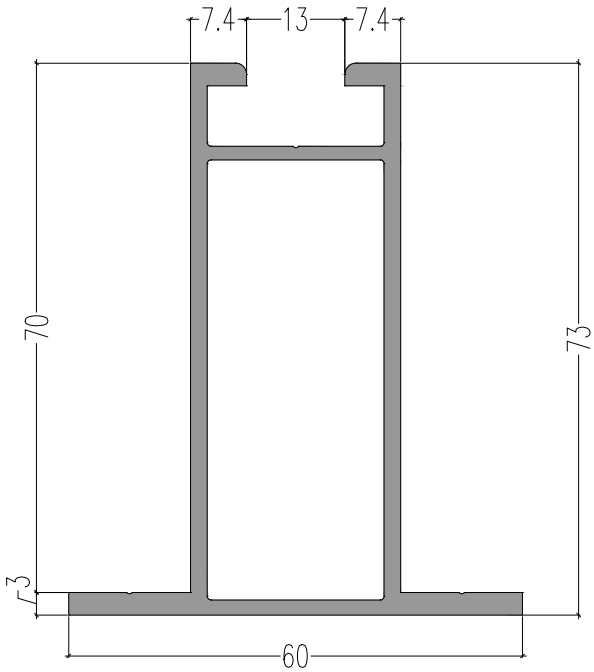

BKSP 98

Art №	Component	Connector Profile	Weight (kg/m)	Cr.Sec Area (mm^2)	Perimeter (mm)	Jx (cm^4)	Jy (cm^4)	Lenght
SSP.98.R0001	SS980005	SSP.98.JR002.L150	0.805	298.32	227.05	7.32	3.30	6
SSP.98.R0002	SS980006	SSP.98.JR004.L150	0.858	317.64	283.46	---	---	6
SSP.98.R0003	SS980007	SSP.98.JR004.L150	1.228	454.74	339.46	---	---	6
SSP.98.R0004	SS980008	STBK1504.L150	0.832	308.22	230.25	---	---	6

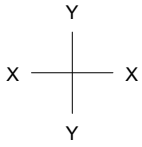

SSP.98.R0001

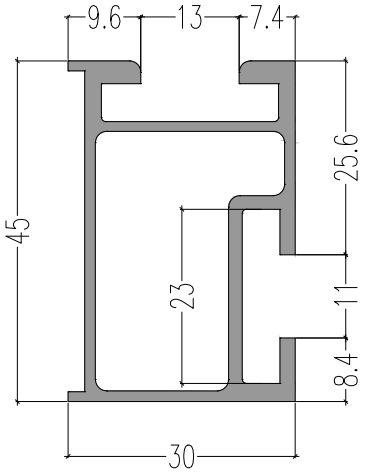

SSP.98.R0002

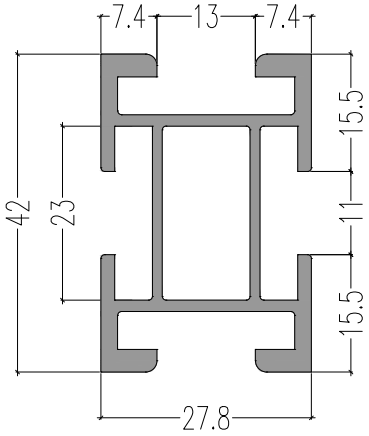

SSP.98.R0003

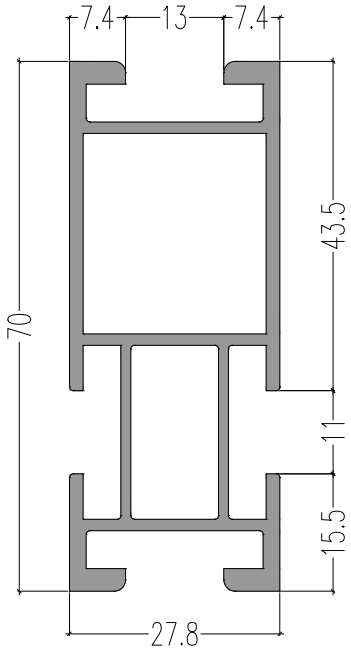

SSP.98.R0004

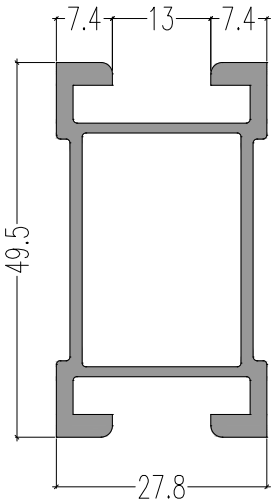

BKSP 98

Art №	Component	Connector Profile	Weight (kg/m)	Cr.Sec Area (mm^2)	Perimeter (mm)	Jx (cm^4)	Jy (cm^4)	Lenght
SSP.98.R0005	SS980009	---	1.236	457.93	274.97	---	---	6
SSP.98.R0006	SS980010	---	1.450	537.13	318.97	---	---	6
SSP.98.R0007	SS980011	---	1.645	609.13	358.97	---	---	6
SSP.98.R0008	SS980012	---	2.000	740.89	424.97	---	---	6

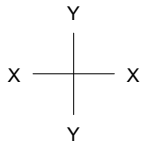

SSP.98.R0005

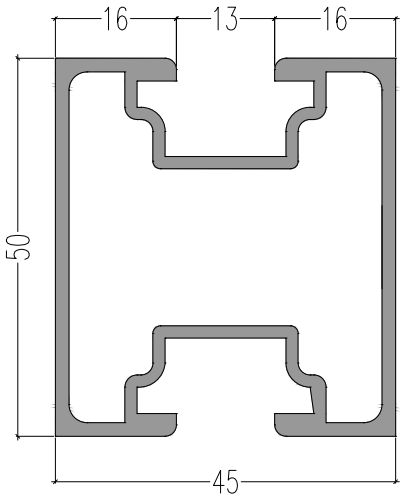

SSP.98.R0006

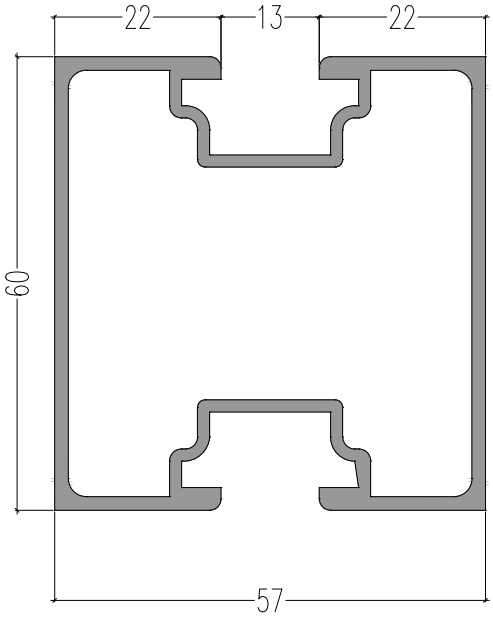

SSP.98.R0007

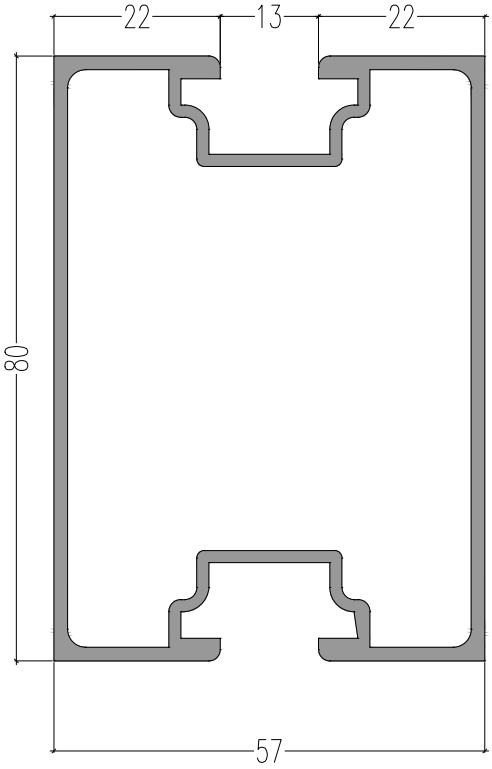

SSP.98.R0008

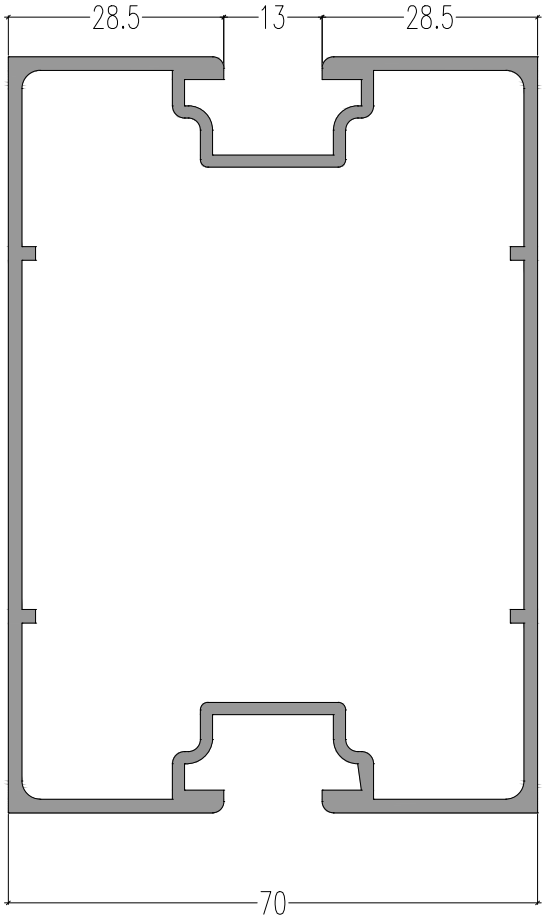

BKSP 98

Art №	Component	Connector Profile	Weight (kg/m)	Cr.Sec Area (mm^2)	Perimeter (mm)	Jx (cm^4)	Jy (cm^4)	Lenght
SSP.98.R0009	SS980013	---	1.962	726.70	573.60	---	---	6
SSP.98.AD001	SS980014	---	1.358	503.00	426.27	---	---	6

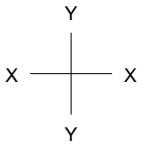

SSP.98.R0009

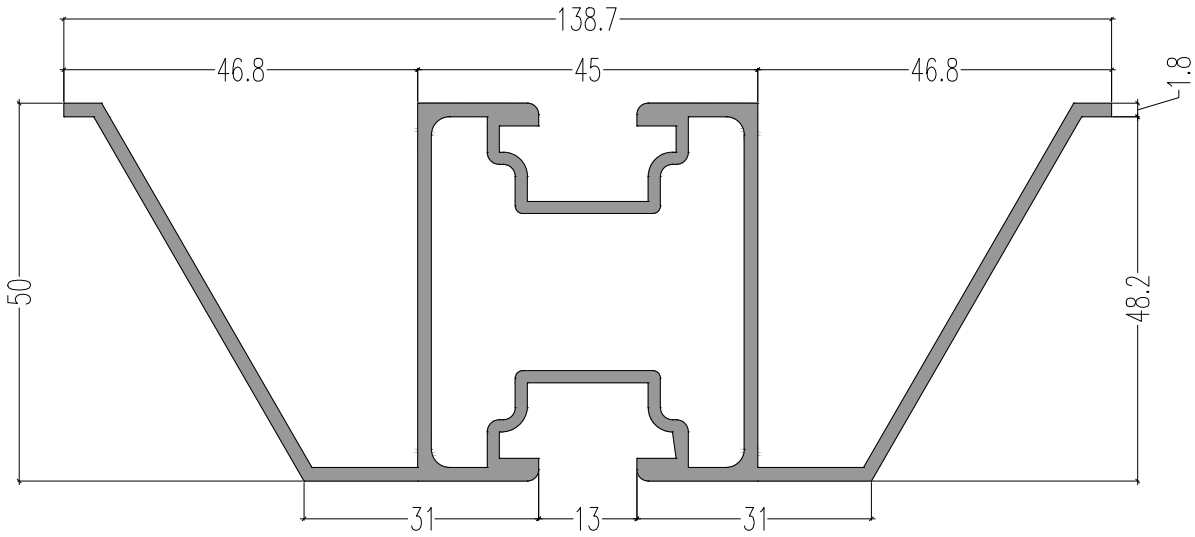

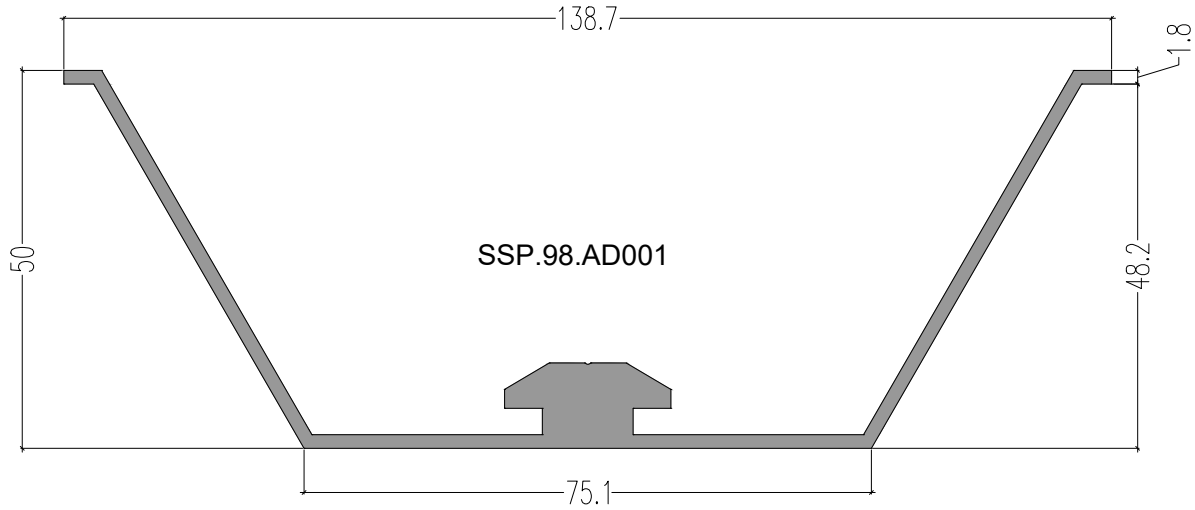

SSP.98.AD001

BKSP 98

Art №	Component	Connector Profile	Weight (kg/m)	Cr.Sec Area (mm^2)	Perimeter (mm)	Jx (cm^4)	Jy (cm^4)	Lenght
SSP.98.R0010	SS980015	---	1.555	575.87	345.87	---	---	6
SSP.98.R0011	SS980016	---	1.749	647.87	385.87	---	---	6

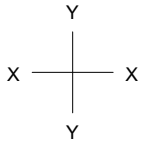

SSP.98.R0010

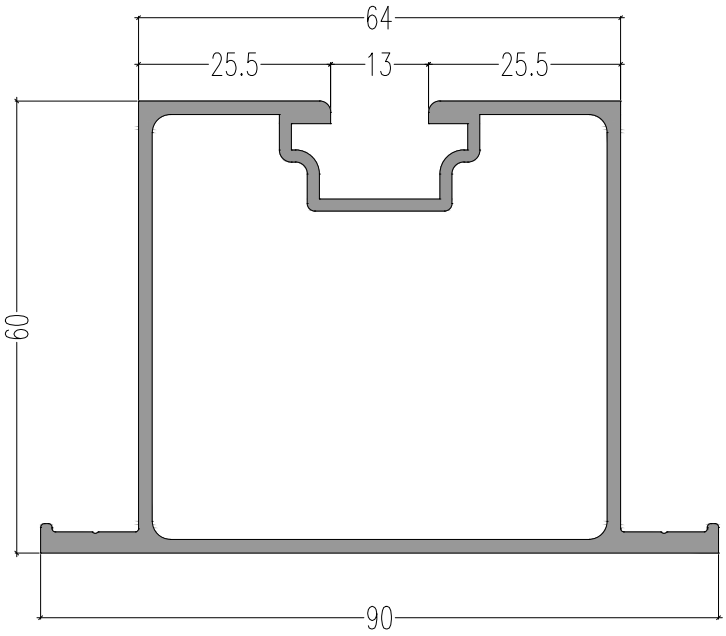

SSP.98.R0011

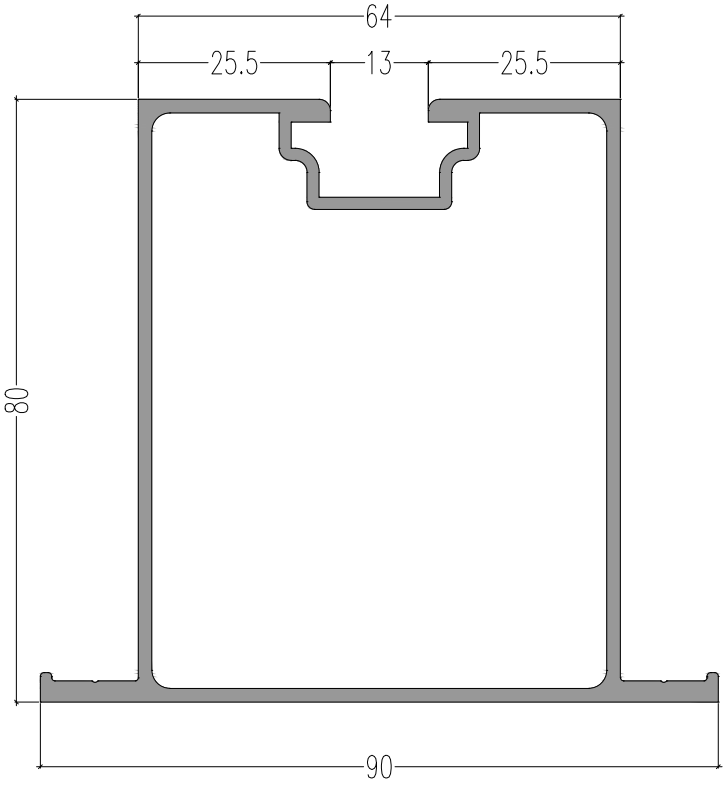

BKSP 98

Art №	Component	Connector Profile	Weight (kg/m)	Cr.Sec Area (mm^2)	Perimeter (mm)	Jx (cm^4)	Jy (cm^4)	Lenght
SSP.98.R0012	SS980017	---	1.944	719.87	425.87	---	---	6
SSP.98.R0013	SS980018	---	2.138	791.87	465.87	---	---	6

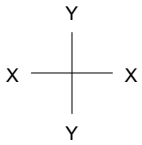

SSP.98.R0012

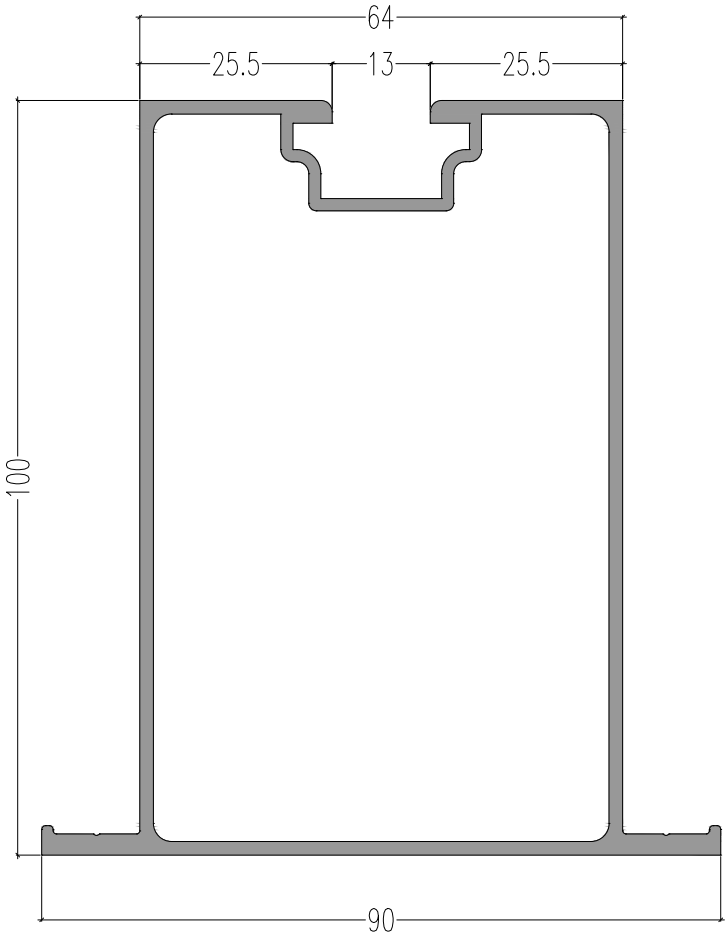

SSP.98.R0013

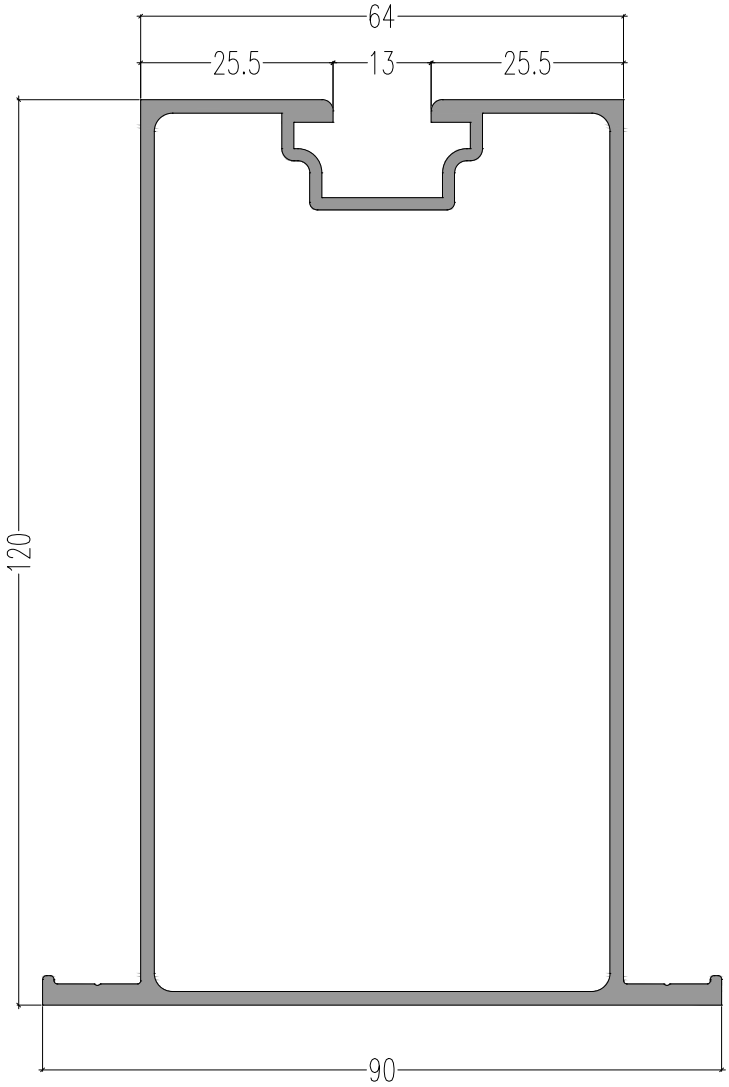

BKSP 98

Art №	Component	Connector Profile	Weight (kg/m)	Cr.Sec Area (mm^2)	Perimeter (mm)	Jx (cm^4)	Jy (cm^4)	Lenght
SSP.98.A0001	SS980019	---	1.065	394.46	266.45	---	---	6
SSP.98.A0002	SS980020	---	1.227	454.46	306.45	---	---	6

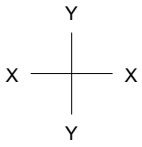

SSP.98.A0001

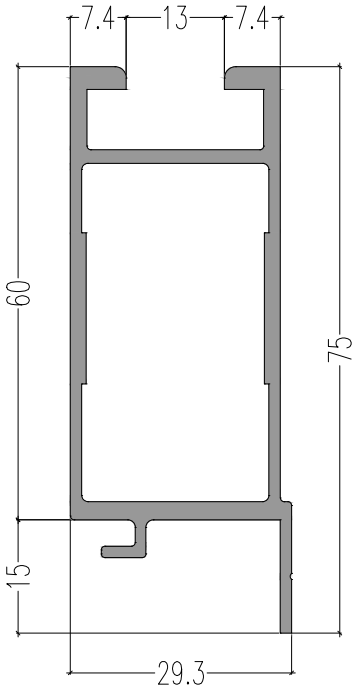

SSP.98.A0002

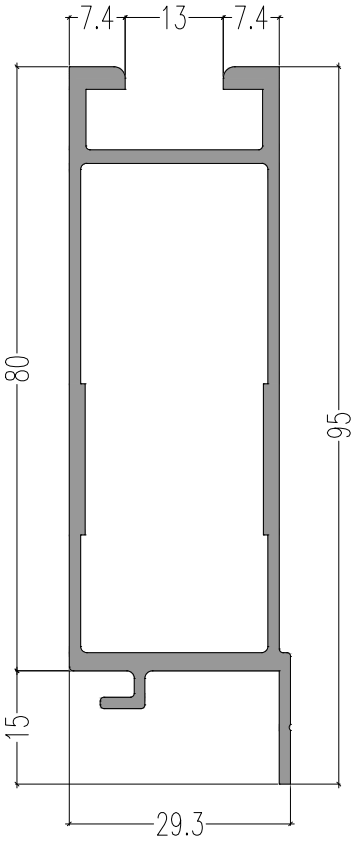

BKSP 98

Art №	Component	Connector Profile	Weight (kg/m)	Cr.Sec Area (mm^2)	Perimeter (mm)	Jx (cm^4)	Jy (cm^4)	Lenght
SSP.98.A0003	SS980021	---	1.389	514.46	346.45	---	---	6
SSP.98.A0004	SS980022	---	1.551	574.46	386.45	---	---	6

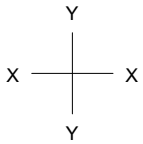

SSP.98.A0003

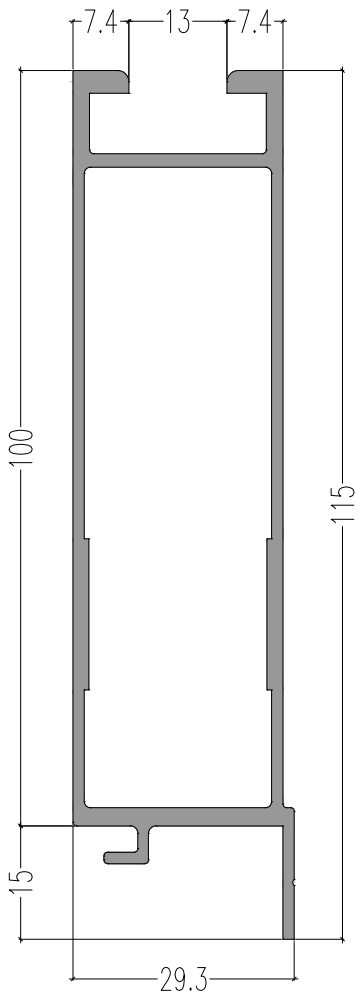

SSP.98.A0004

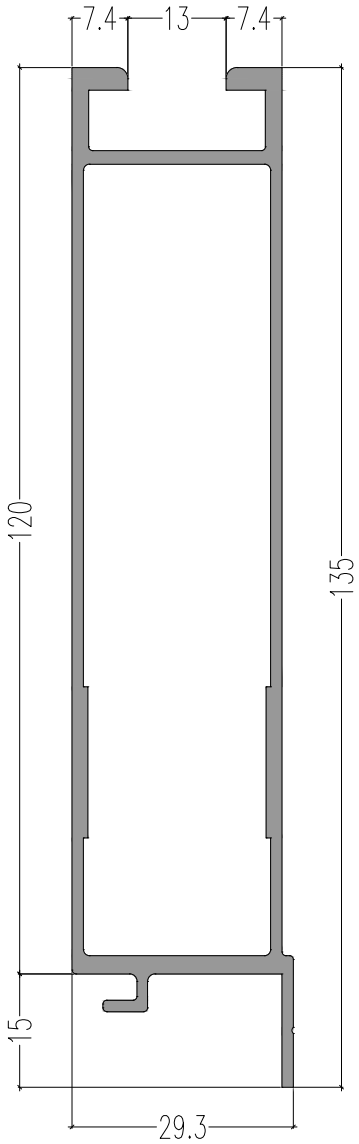

BKSP 98

Art №	Component	Connector Profile	Weight (kg/m)	Cr.Sec Area (mm^2)	Perimeter (mm)	Jx (cm^4)	Jy (cm^4)	Lenght
SSP.98.EC001	SS980023	---	0.471	174.39	129.91	1.47	1.43	6
SSP.98.MC001	SS980024	---	0.504	186.79	111.12	0.22	1.75	6
SSP.98.JR001	SS980025	---	0.611	226.48	185.99	2.05	0.74	6
SSP.98.JR002	SS980026	---	0.133	49.43	58.01	0.01	0.29	6
SSP.98.JR003	SS980027	---	0.306	113.21	54.37	0.03	0.37	6
SSP.98.JR004	SS980028	---	0.353	130.76	112.88	0.96	0.06	6

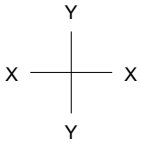

SSP.98.EC001

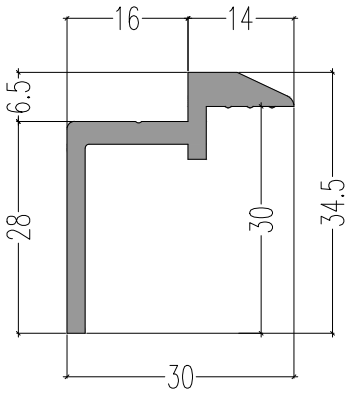

SSP.98.MC001

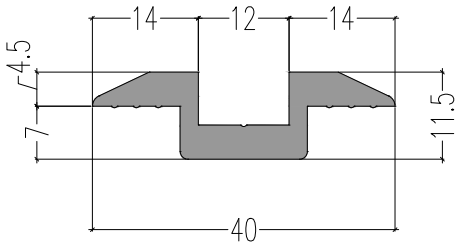

SSP.98.JR001

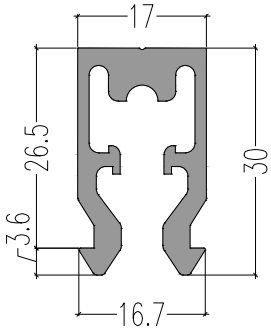

SSP.98.JR002

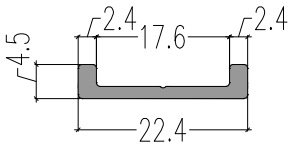

SSP.98.JR004

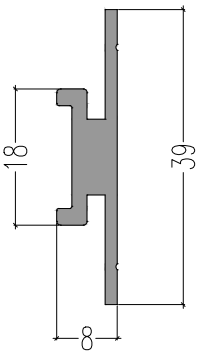

SSP.98.JR003

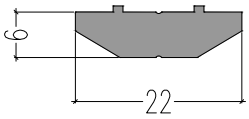

BKSP 98

Art №	Component	Connector Profile	Weight (kg/m)	Cr.Sec Area (mm^2)	Perimeter (mm)	Jx (cm^4)	Jy (cm^4)	Lenght
SSP.98.ST001	SS980030	---	0.540	200.14	138.28	3.74	3.74	6
SSP.98.ST002	SS980031	---	0.475	176.04	242.80	2.31	2.59	6
SSP.98.ST003	SS980032	---	1.377	509.92	181.39	14.23	6.77	6
SSP.98.ST004	SS980033	---	2.724	1008.73	410.34	25.67	74.54	6

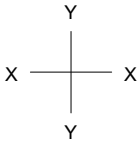

SSP.98.ST001

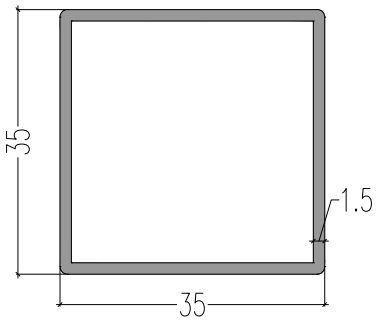

SSP.98.ST002

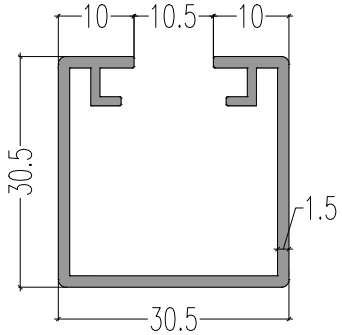

SSP.98.ST003

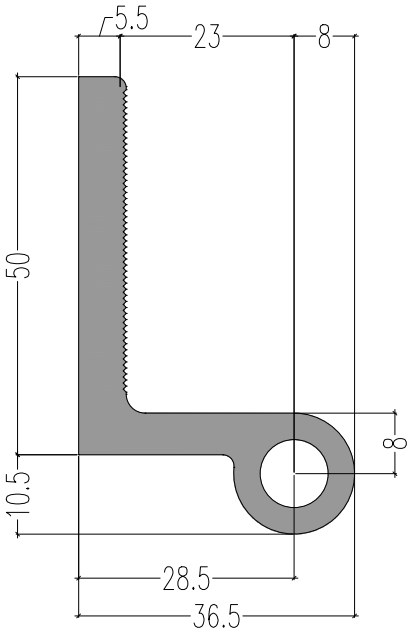

SSP.98.ST004

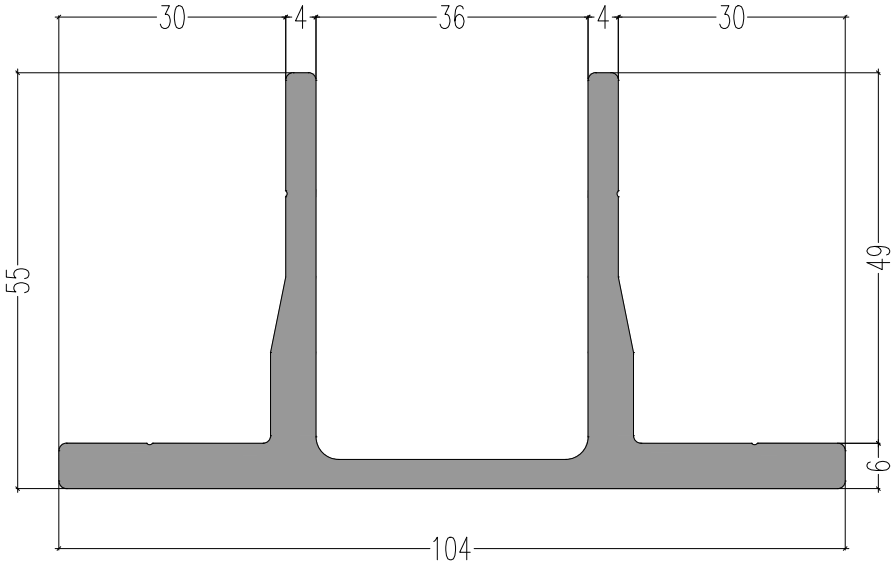

BKSP 98

Art №	Component	Connector Profile	Weight (kg/m)	Cr.Sec Area (mm^2)	Perimeter (mm)	Jx (cm^4)	Jy (cm^4)	Lenght
STBK2271	---	---	1.037	383.92	199.23	5.18	14.27	6
STBK1875	---	---	1.283	474.92	199.23	6.27	17.39	6
STBK2272	---	---	1.523	563.92	199.23	7.28	20.35	6
STBK1508	---	---	1.283	474.92	199.23	11.24	11.24	6
STBK2124	---	---	1.013	374.92	159.23	55.57	55.57	6

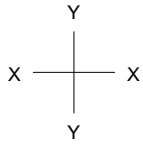

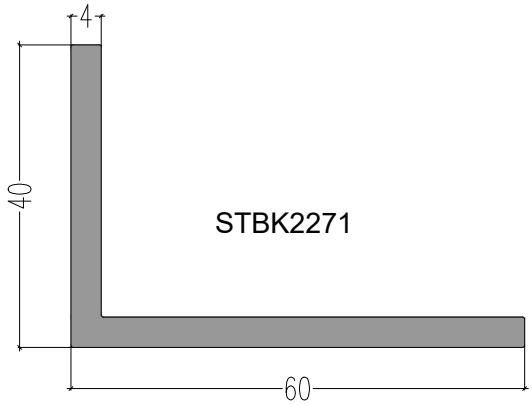

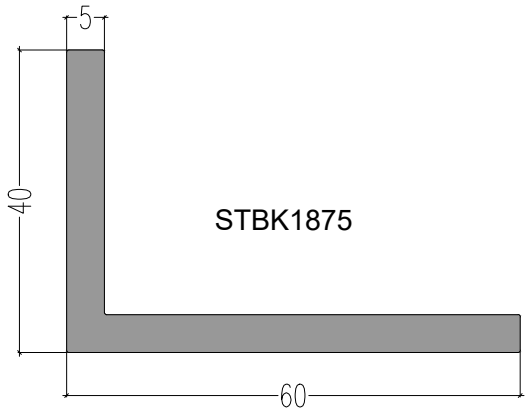

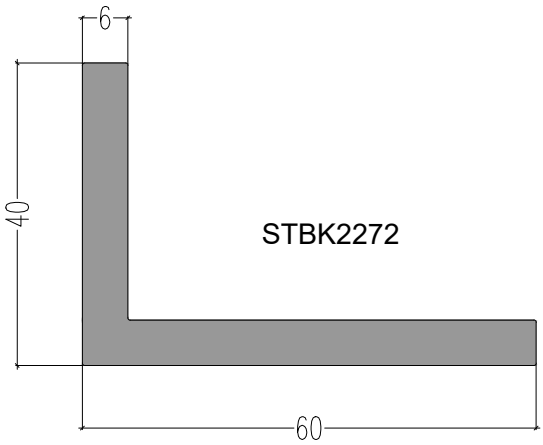

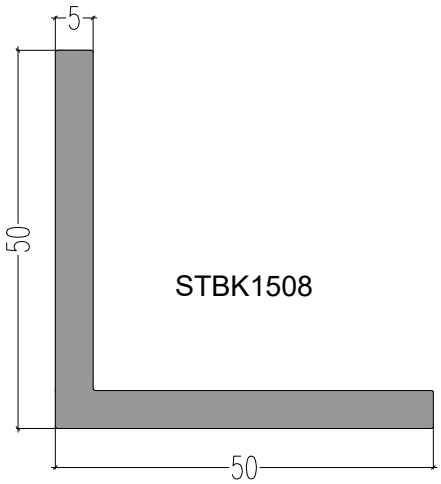

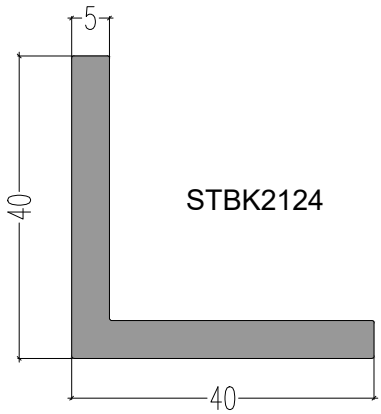

BKSP 98

Art №	Component	Connector Profile	Weight (kg/m)	Cr.Sec Area (mm^2)	Perimeter (mm)	Jx (cm^4)	Jy (cm^4)	Lenght
SSP.98.T0001	SS980033	---	1.552	574.92	238.97	19.90	9.05	6
STBK2023	---	---	2.093	774.92	318.97	22.99	41.71	6
STBK1504	---	---	0.497	184	99.49	1.11	2.16	6

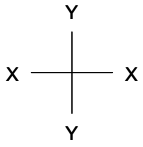

SSP.98.T0001

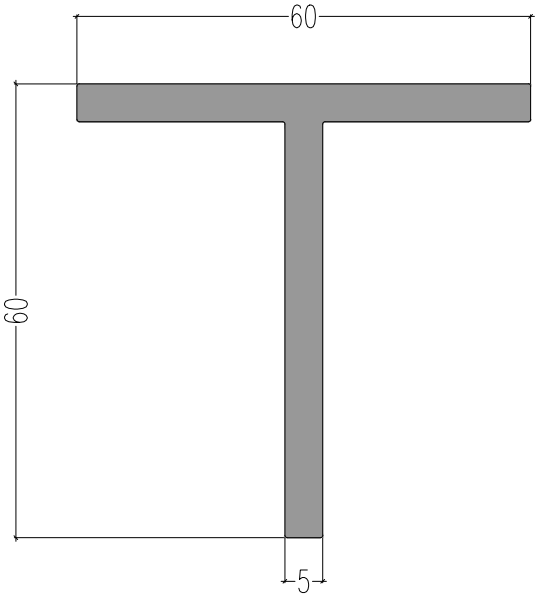

STBK1504

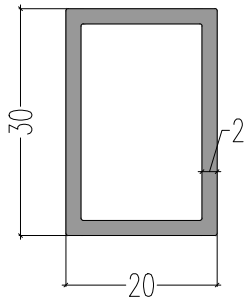

STBK2023

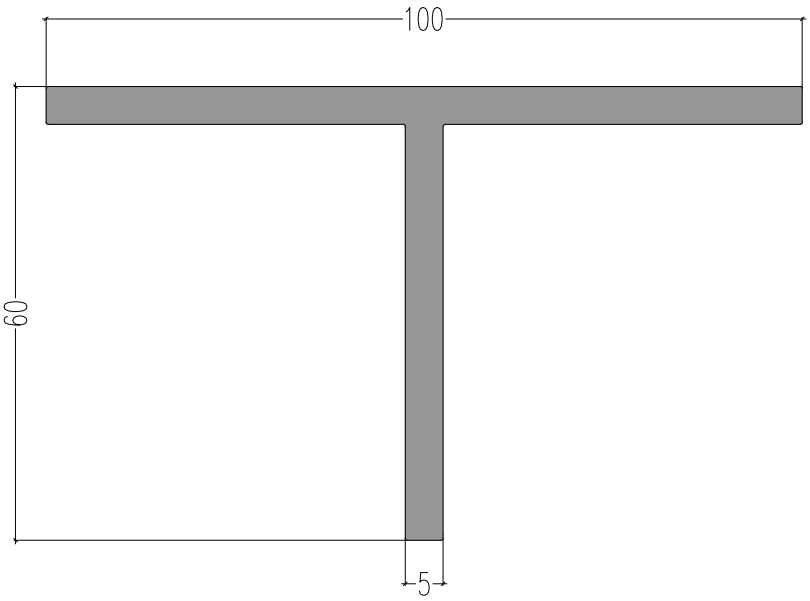

BENKAM

ALU ARCHITECTS

BKSP 98

3 Accessories and components

Product sketch	Parameters
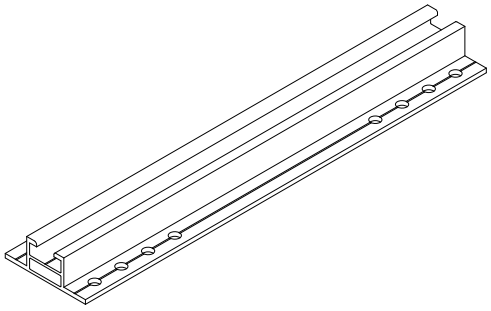	Art: SSP.98.MR001.L300 Profile №: SSP.98.MR001 Weight: 0.255 kg/1PCS
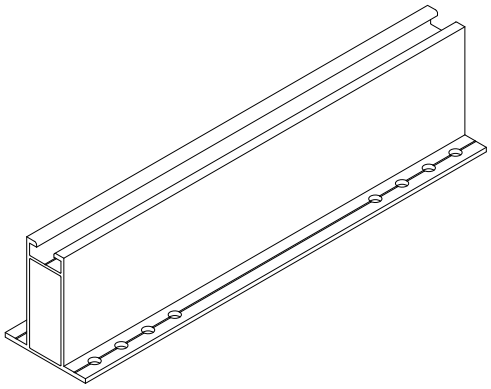	Art: SSP.98.MR002.L300 Profile №: SSP.98.MR002 Weight: 0.435 kg/1PCS
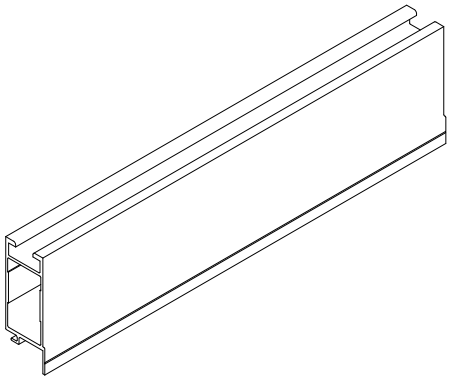	Art: SSP.98.A0001.L200 Profile №: SSP.98.A0001 Weight: 0.213 kg/1PCS
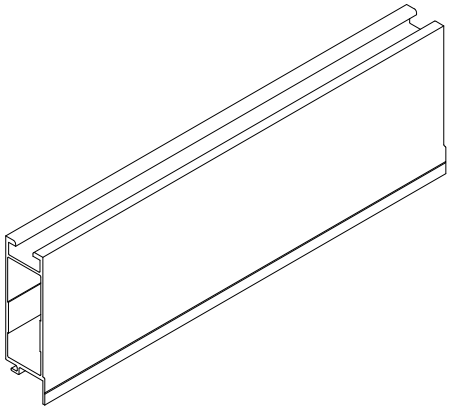	Art: SSP.98.A0002.L200 Profile №: SSP.98.A0002 Weight: 0.245 kg/1PCS

BKSP 98

Product sketch	Parameters
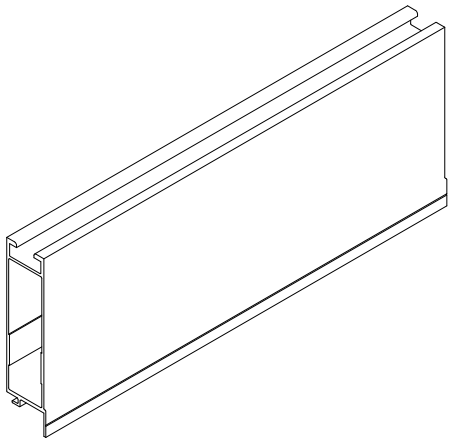	Art: SSP.98.A0003.L200 Profile №: SSP.98.A0003 Weight: 0.278 kg/1PCS
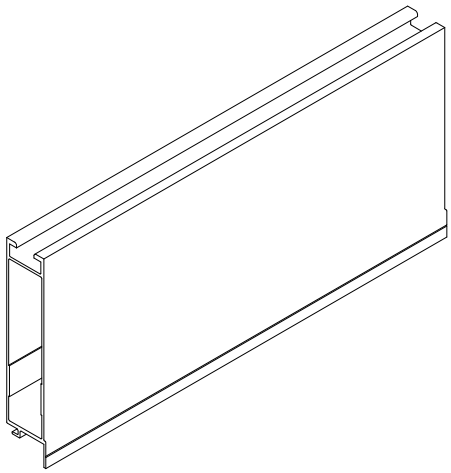	Art: SSP.98.A0004.L200 Profile №: SSP.98.A0004 Weight: 0.310 kg/1PCS
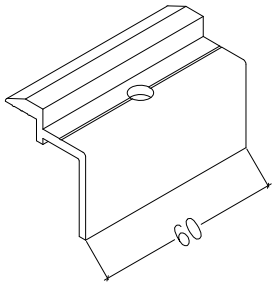	Art: SSP.98.EC001.L60 Profile №: SSP.98.EC001 Weight: 0.028 kg/1PCS
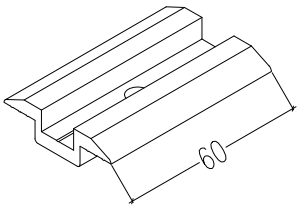	Art: SSP.98.MC001.L60 Profile №: SSP.98.MC001 Weight: 0.03 kg/1PCS

Product sketch	Parameters
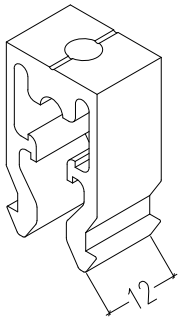	Art: SSP.98.JR001.L12 Profile №: SSP.98.JR001 Weight: 0.007 kg/1PCS
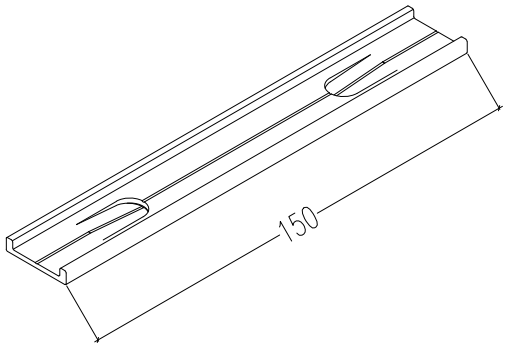	Art: SSP.98.JR002.L150 Profile №: SSP.98.JR002 Weight: 0.02 kg/1PCS
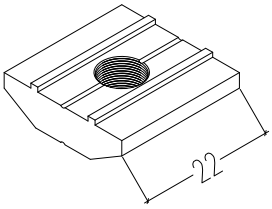	Art: SSP.98.JR003.L22 Profile №: SSP.98.JR003 Weight: 0.007 kg/1PCS
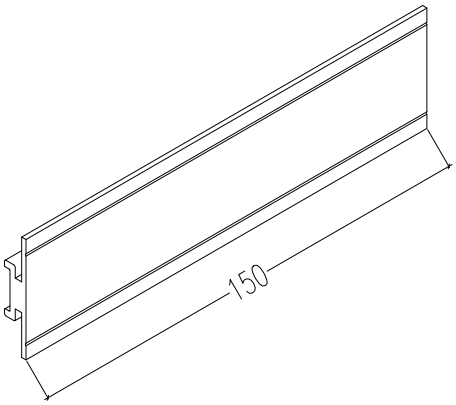	Art: SSP.98.JR004.L150 Profile №: SSP.98.JR004 Weight: 0.053 kg/1PCS

Product sketch	Parameters
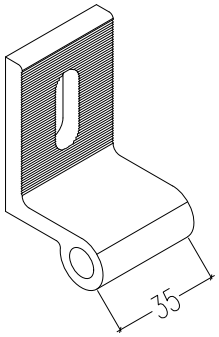	Art: SSP.98.ST003.L35 Profile №: SSP.98.ST003 Weight: 0.048 kg/1PCS
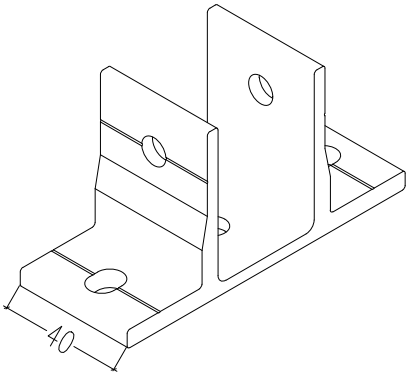	Art: SSP.98.ST004.L40 Profile №: SSP.98.ST004 Weight: 0.109 kg/1PCS
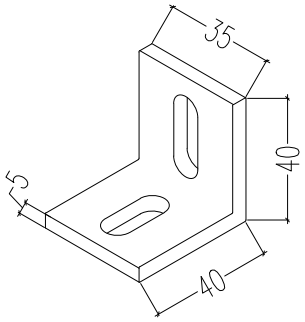	Art: STBK2124.L35 Profile №: STBK2124 Weight: 0.035 kg/1PCS
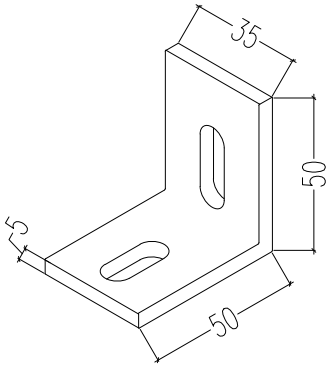	Art: STBK1508.L35 Profile №: STBK1508 Weight: --- kg/1PCS

Product sketch	Parameters
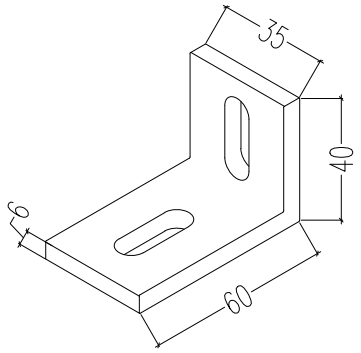	Art: STBK2272.L35 Profile №: STBK2272 Weight: 0.053 kg/1PCS
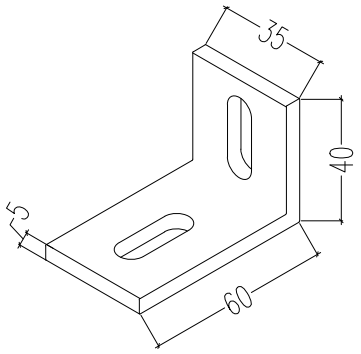	Art: STBK1875.L35 Profile №: STBK1875 Weight: 0.045 kg/1PCS
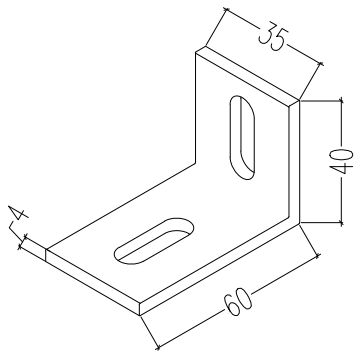	Art: STBK2271.L35 Profile №: STBK2271 Weight: 0.363 kg/1PCS
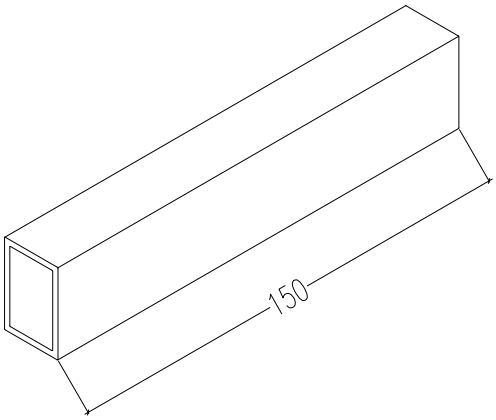	Art: STBK1504.L150 Profile №: STBK1504 Weight: 0.075 kg/1PCS

BENKAM

ALU ARCHITECTS

BKSP 98

4 Solutions for flat roofs

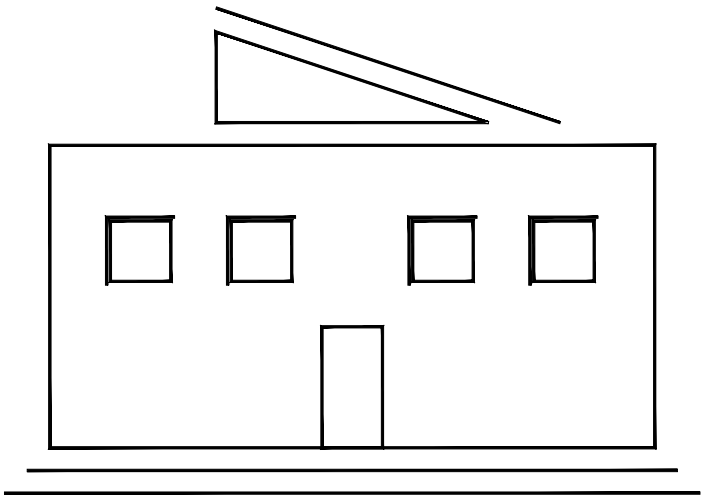

Solutions for flat roofs using T and L profiles

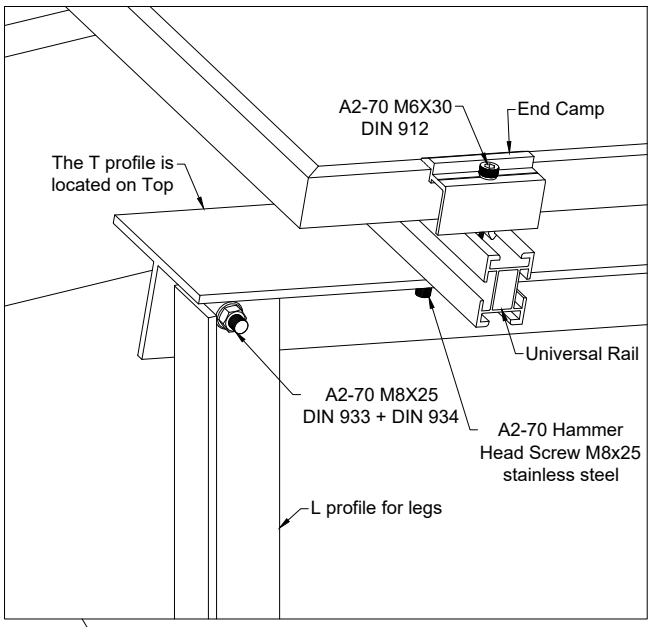

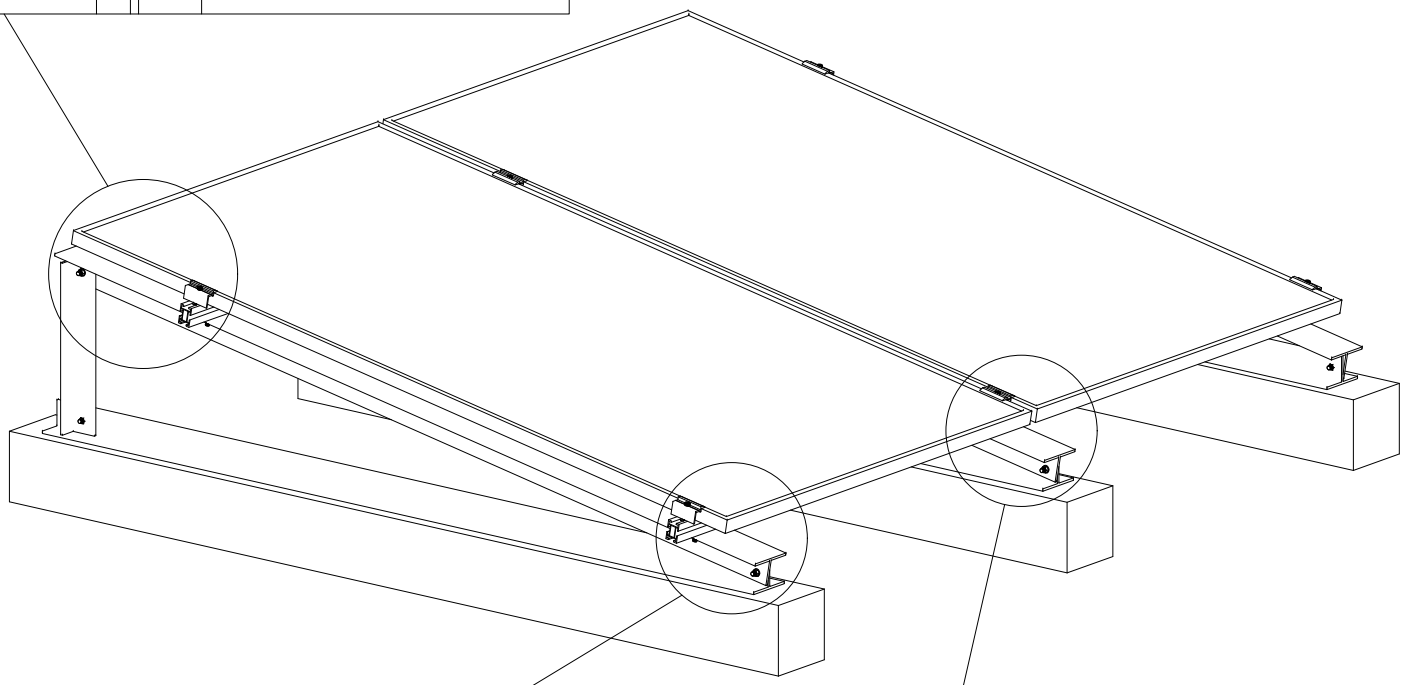

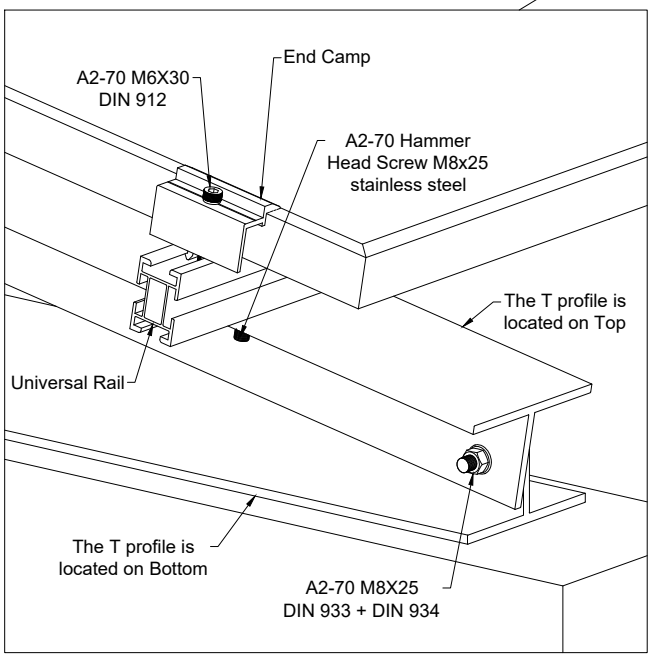

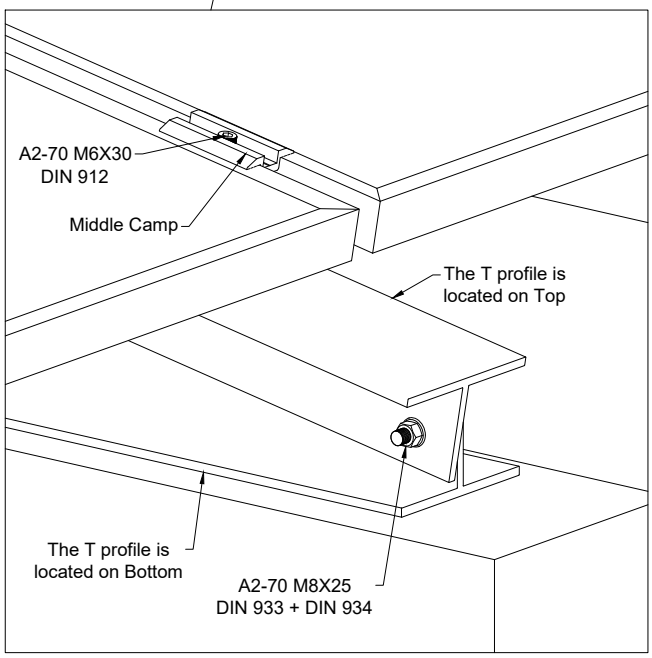

Solutions for flat roofs using Custom legs and brackets

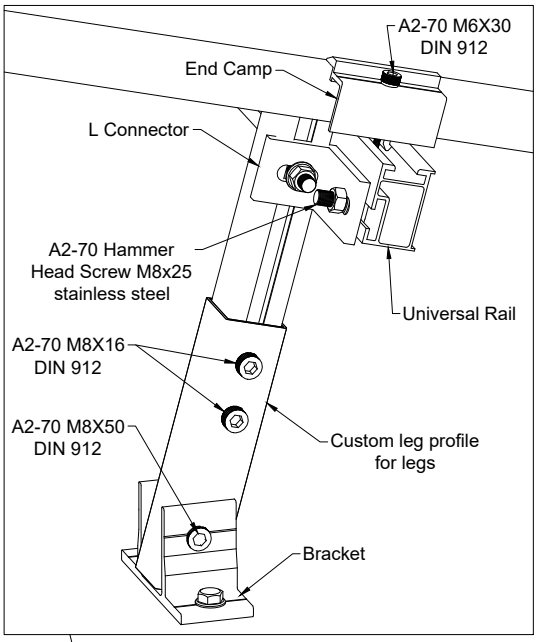

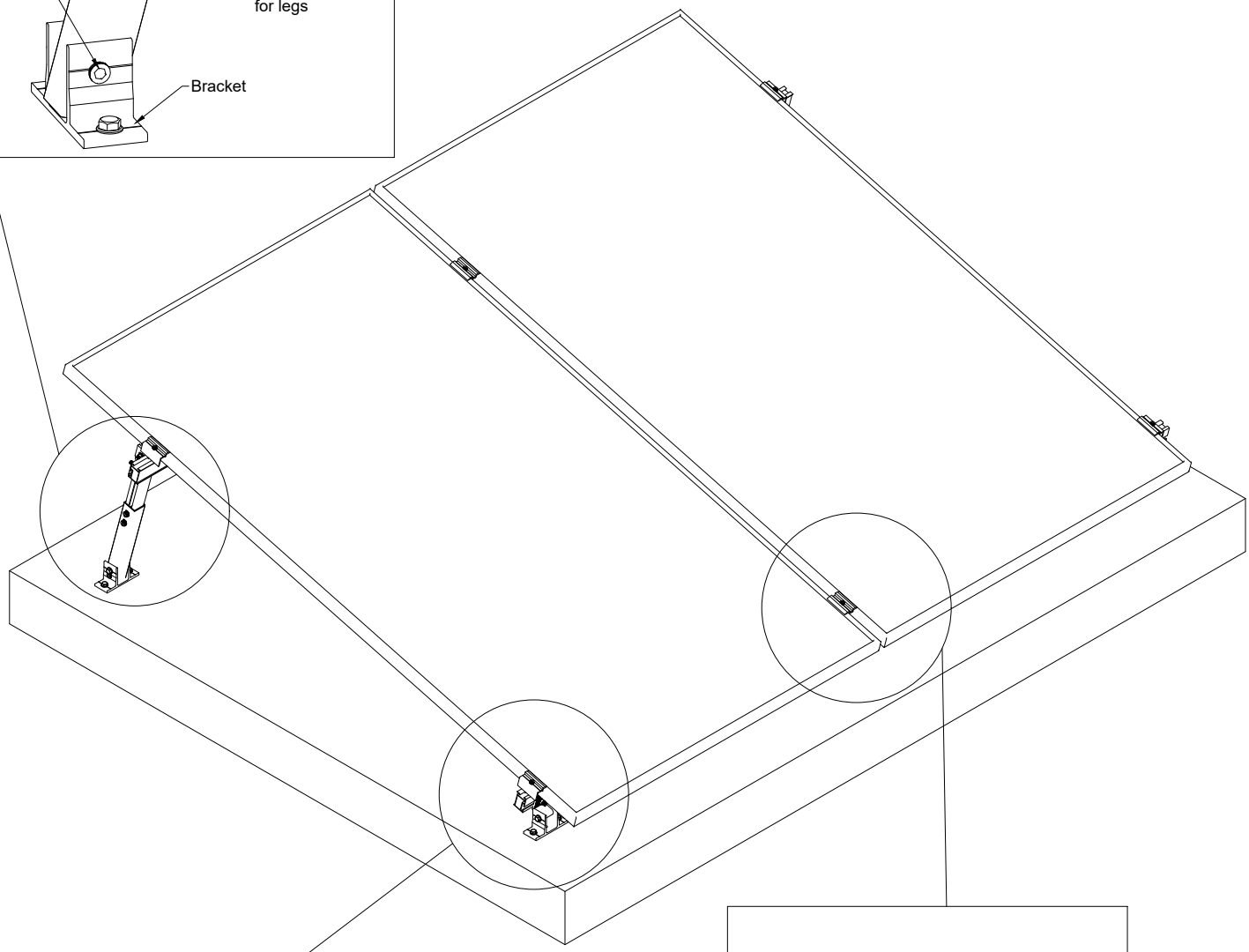

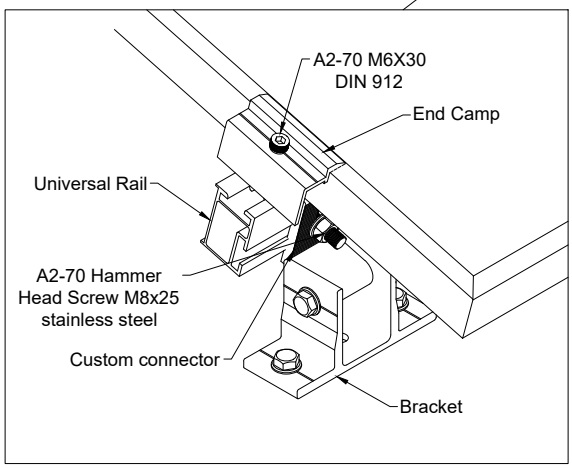

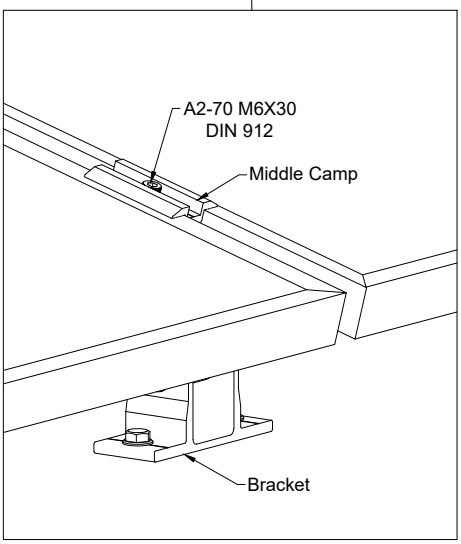

Solutions for flat roofs using Custom legs and T profiles

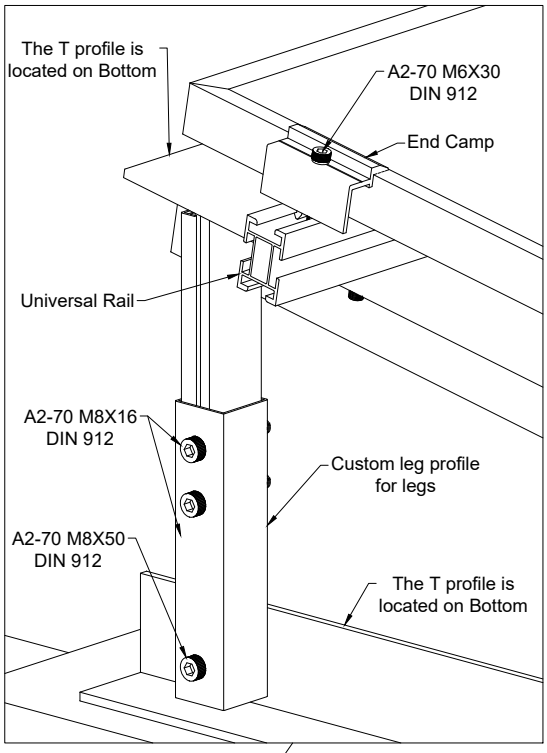

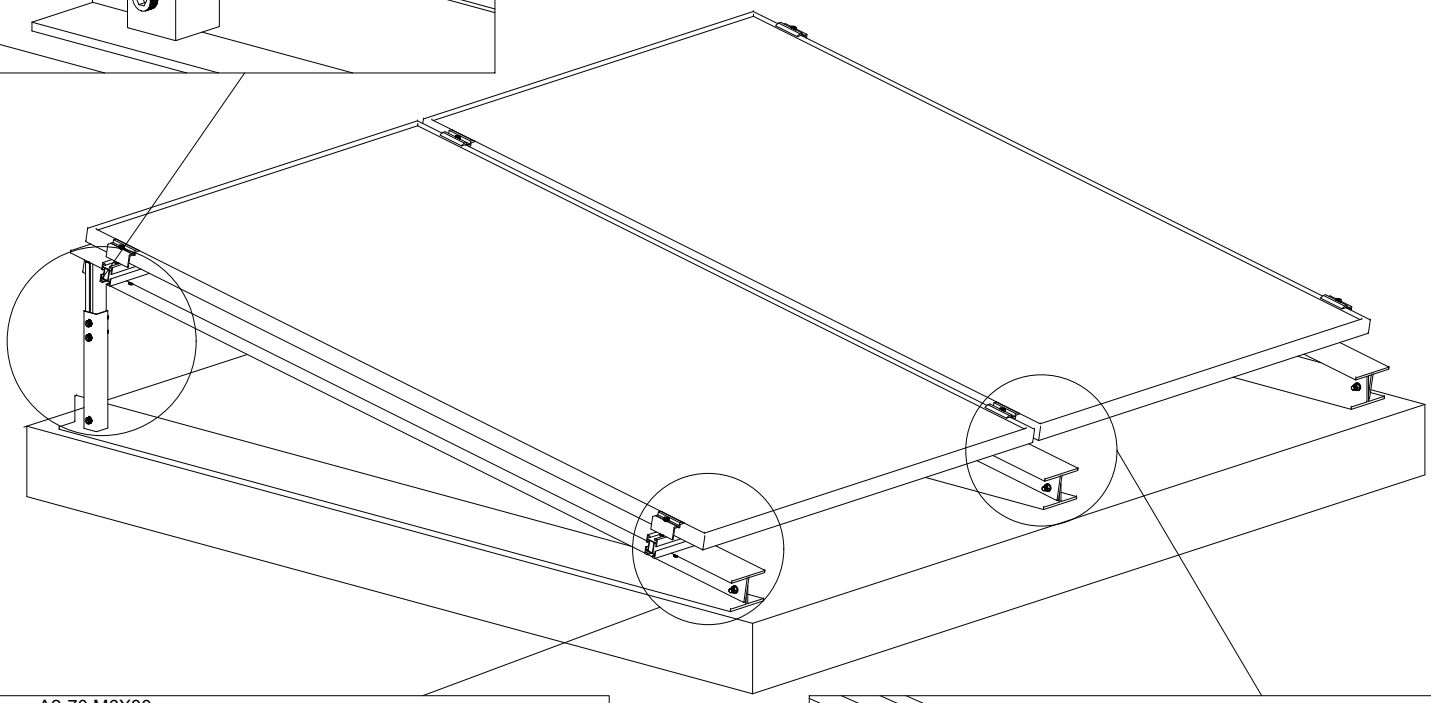

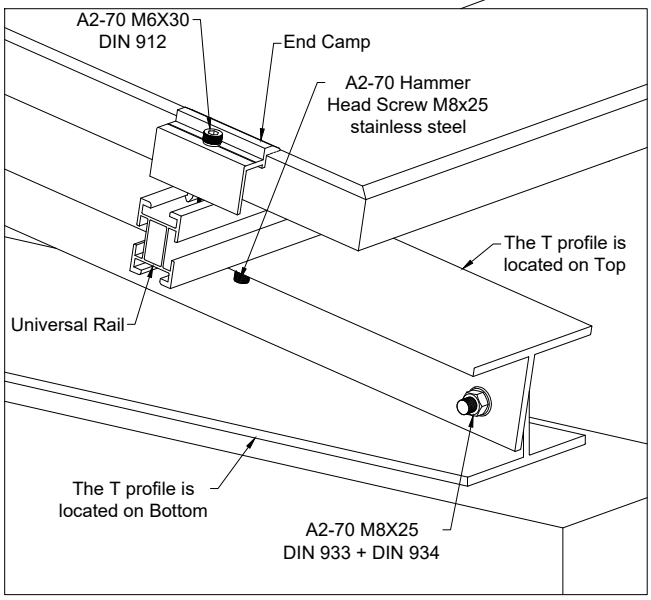

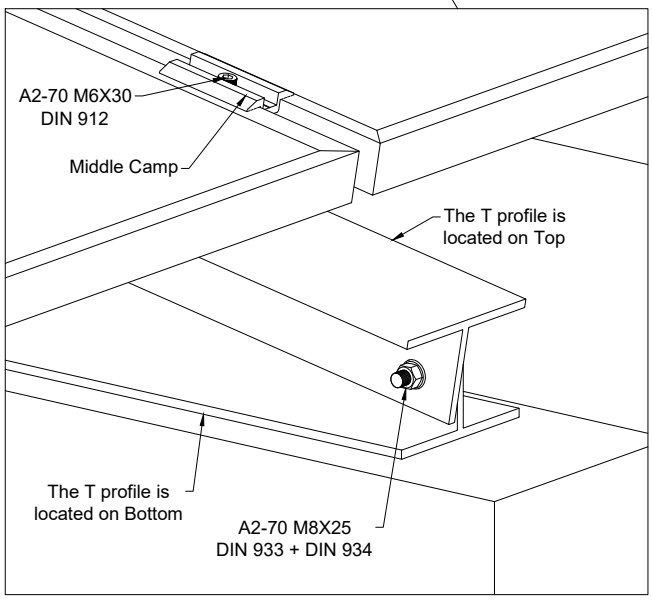

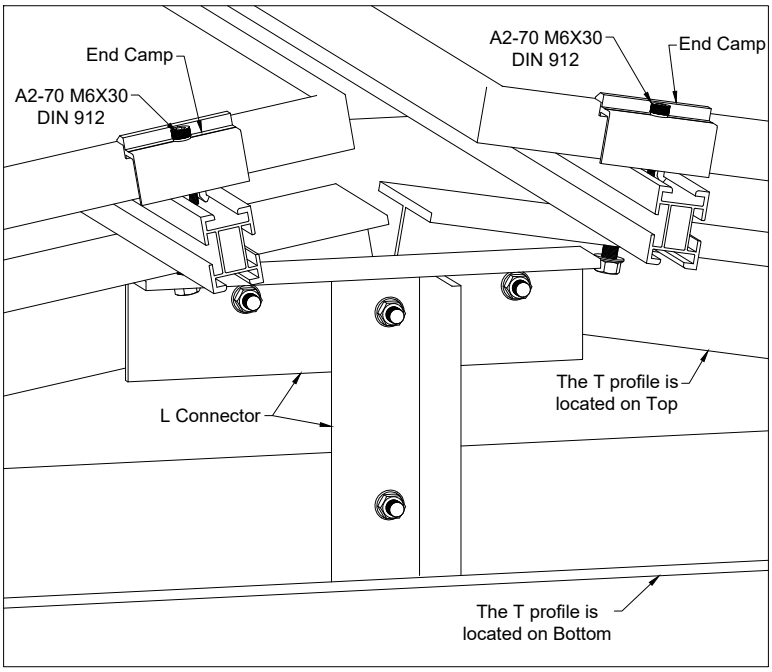
End Camp
A2-70 M6X30
DIN 912
A2-70 M6X30
DIN 912
End Camp
The T profile is
located on Top
L Connector
The T profile is
located on Bottom

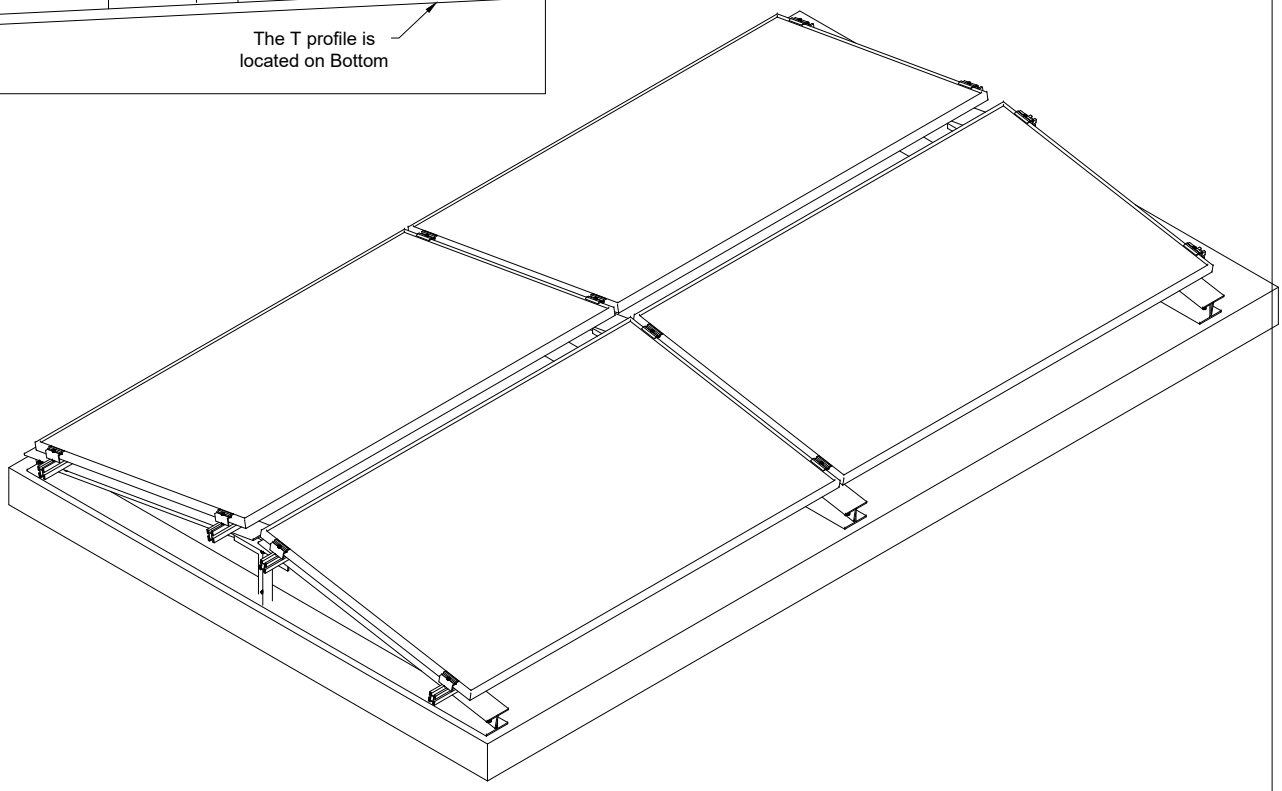

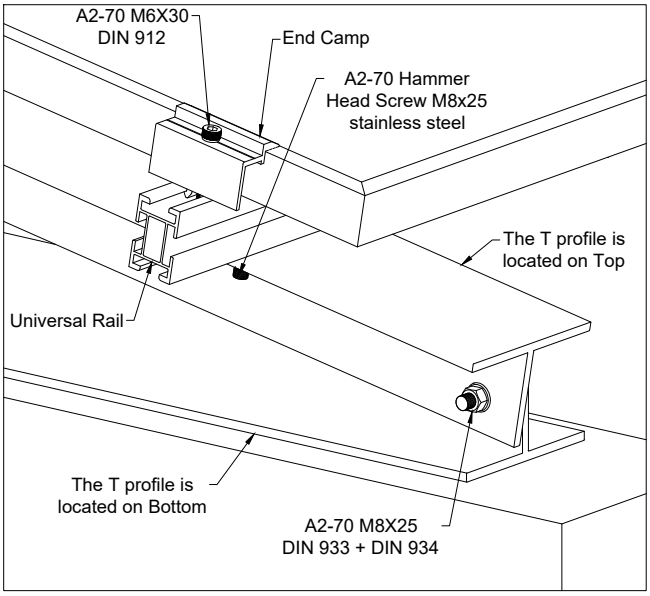
A2-70 M6X30
DIN 912
End Camp
A2-70 Hammer
Head Screw M8x25
stainless steel
The T profile is
located on Top
Universal Rail
The T profile is
located on Bottom
A2-70 M8X25
DIN 933 + DIN 934

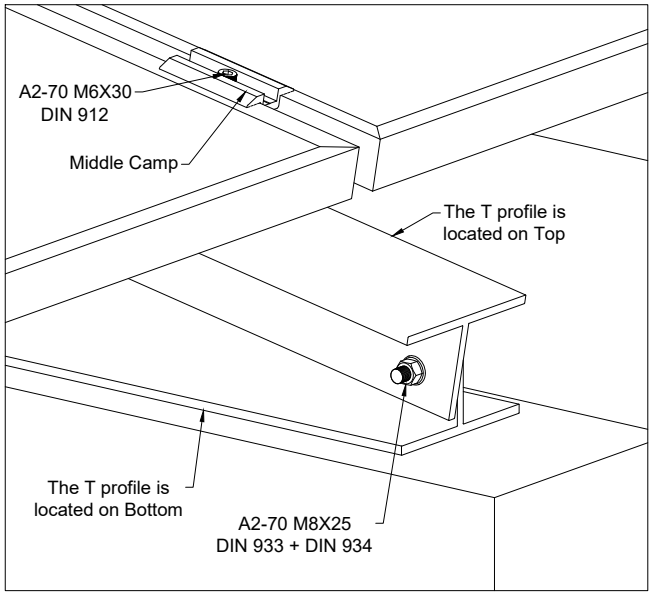
A2-70 M6X30
DIN 912
Middle Camp
The T profile is
located on Top
The T profile is
located on Bottom
A2-70 M8X25
DIN 933 + DIN 934

BENKAM

ALU ARCHITECTS

BKSP 98

5 Solutions for pitched roofs

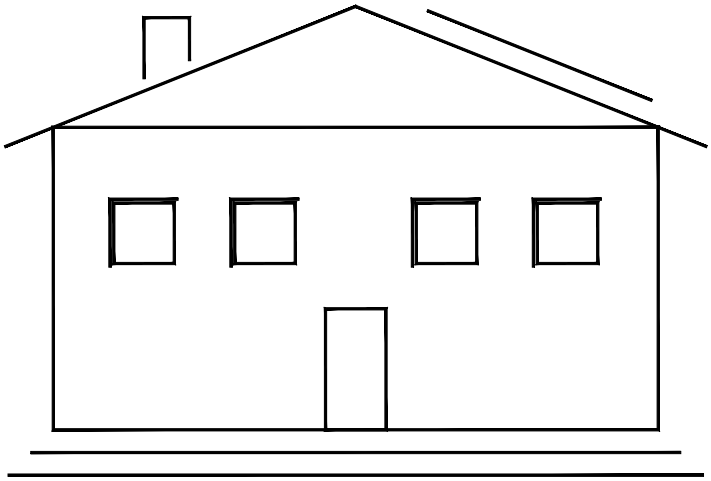

Solutions for pitched roofs

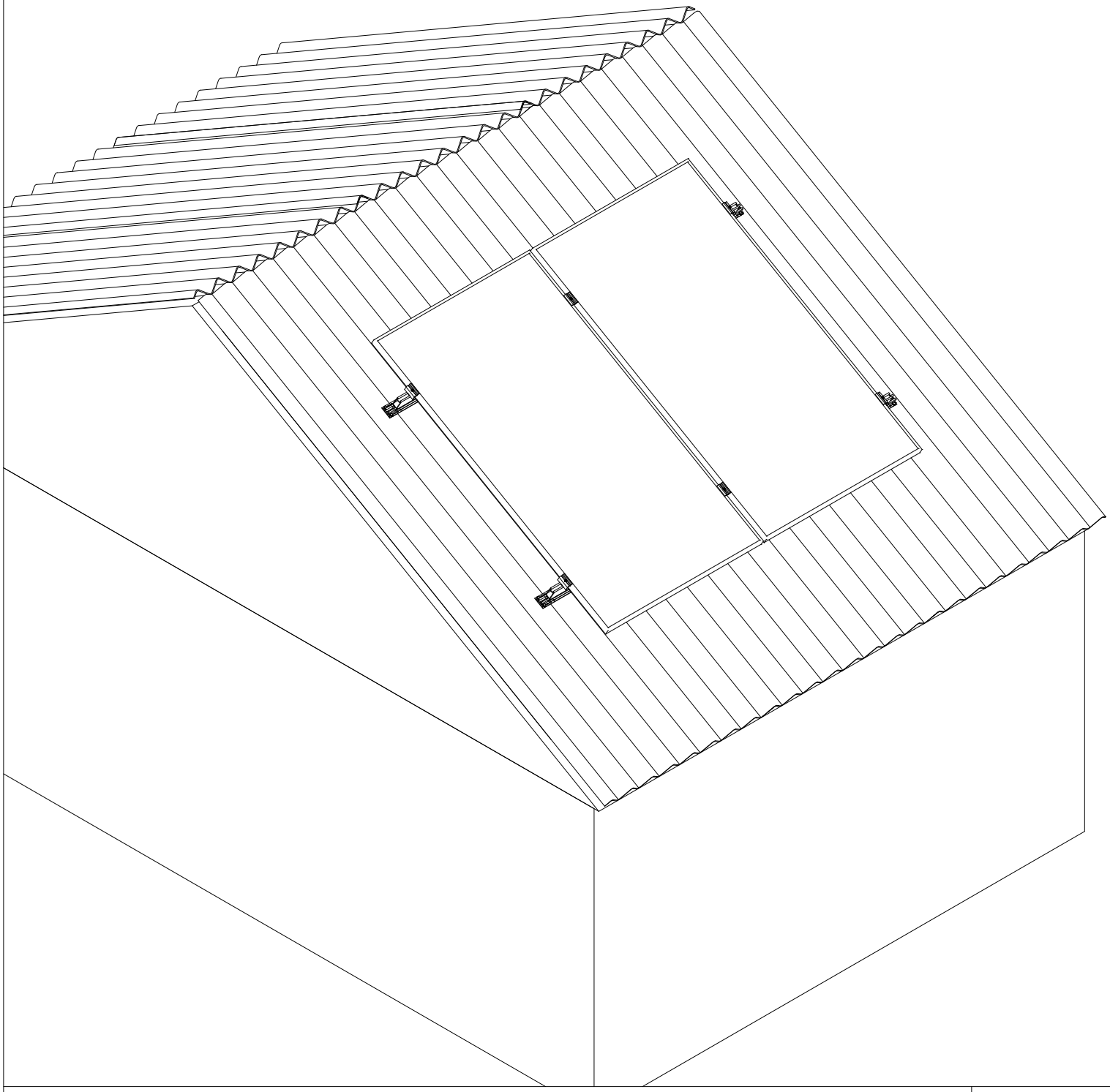

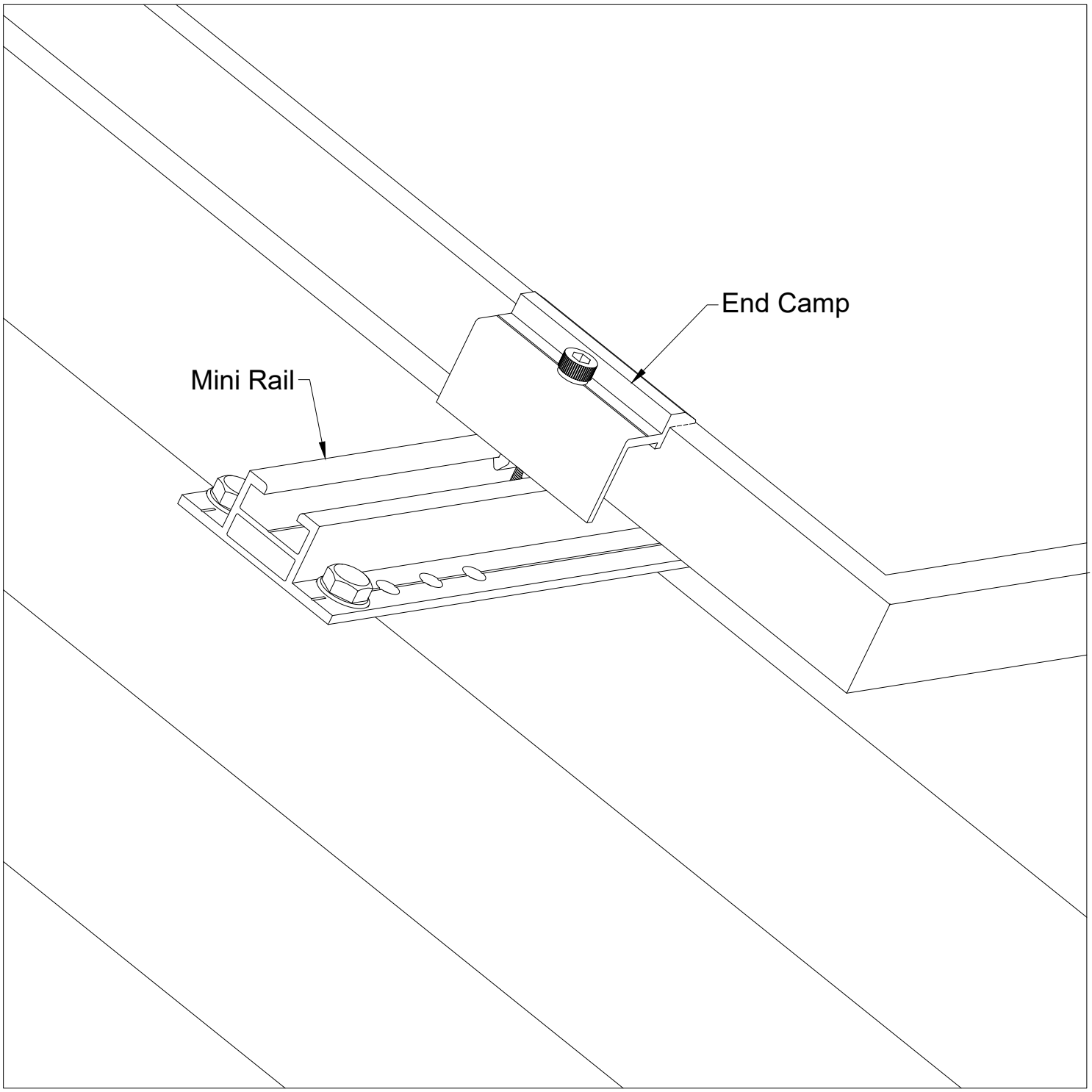

Mini Rail

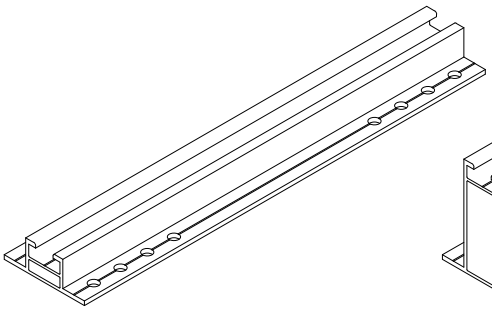

Mini Rail

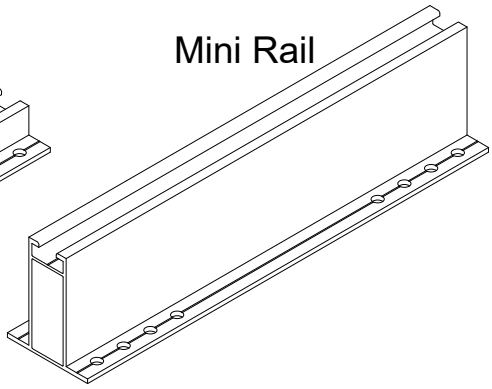

End Camp

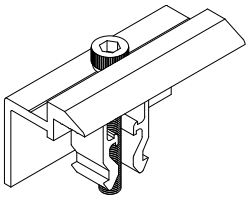

Middle Camp

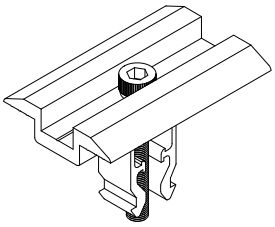

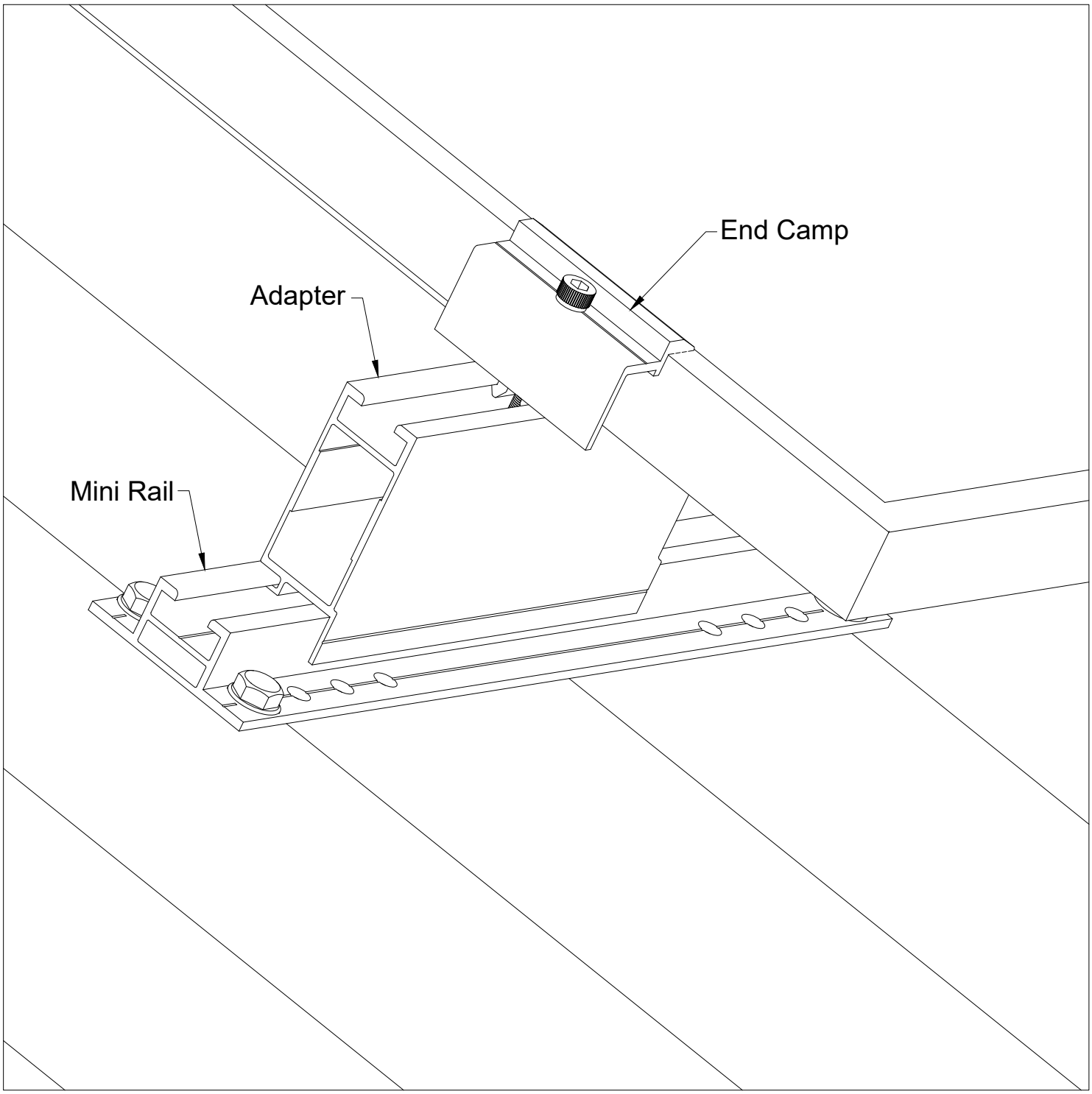

Mini Rail

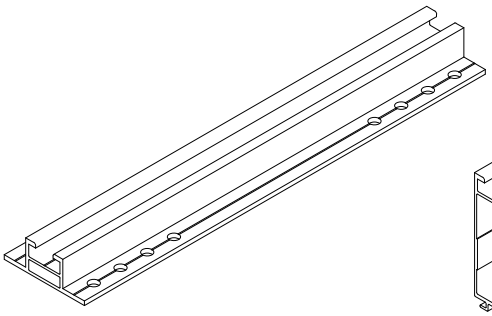

Mini Rail

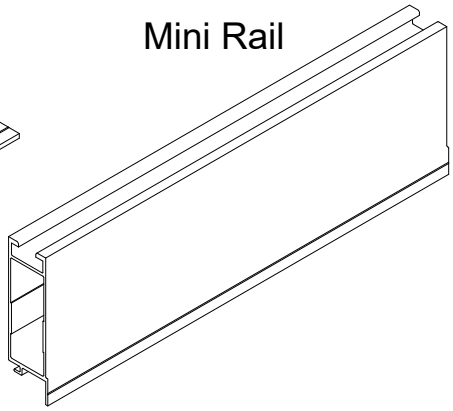

End Camp

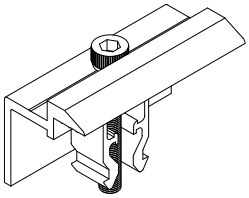

Middle Camp

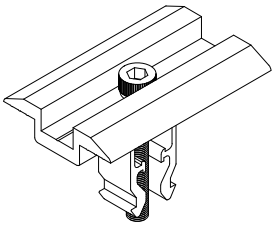

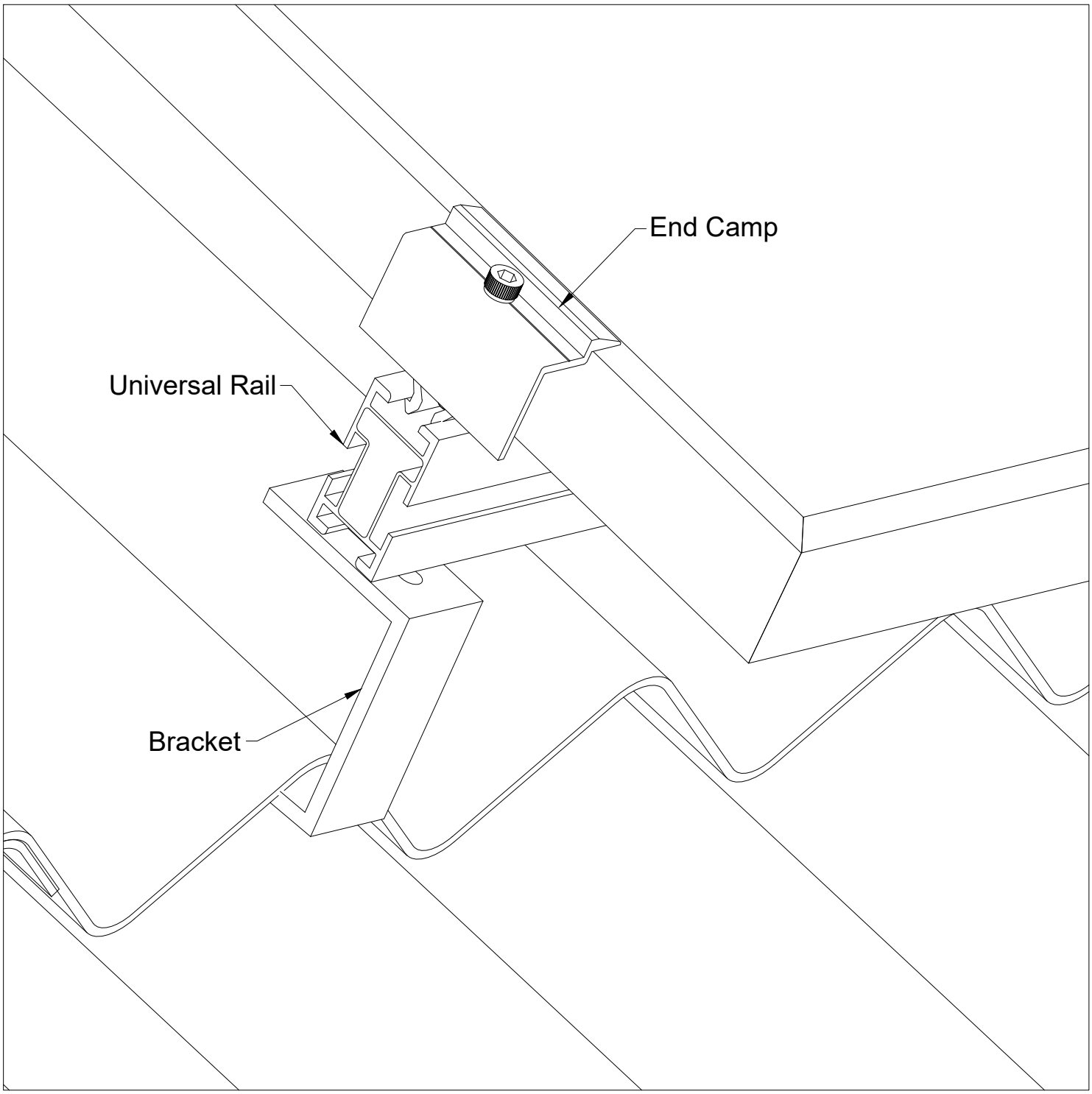
End Camp
Universal Rail
Bracket

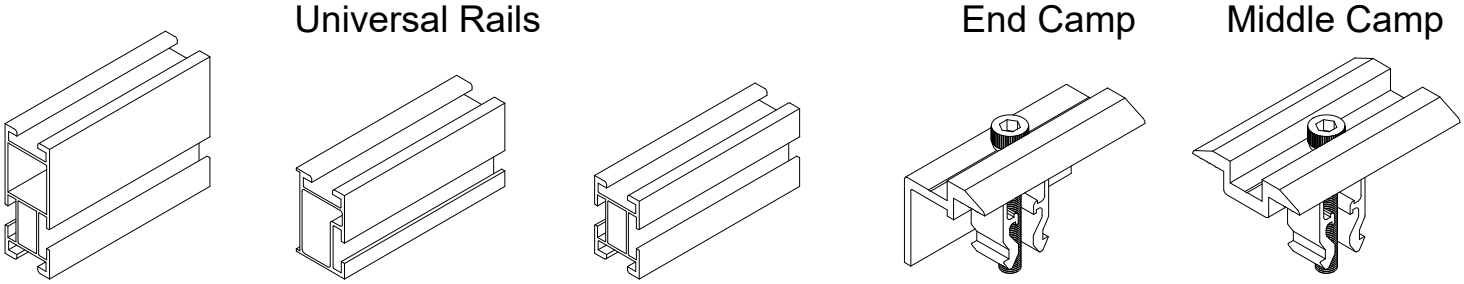
Universal Rails
End Camp
Middle Camp

BKSP 98

L Connector

End Camp

Custom Leg

Universal Rail

L Connector

Bracket

Universal Rails

End Camp

Middle Camp

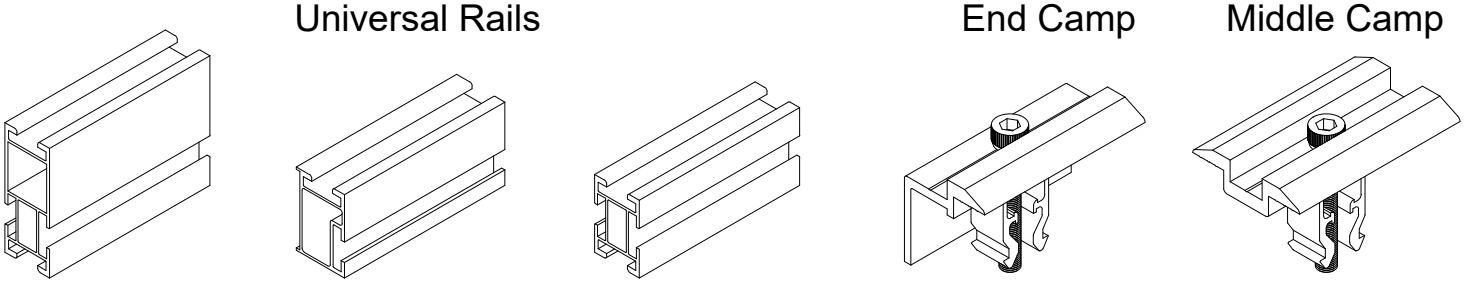

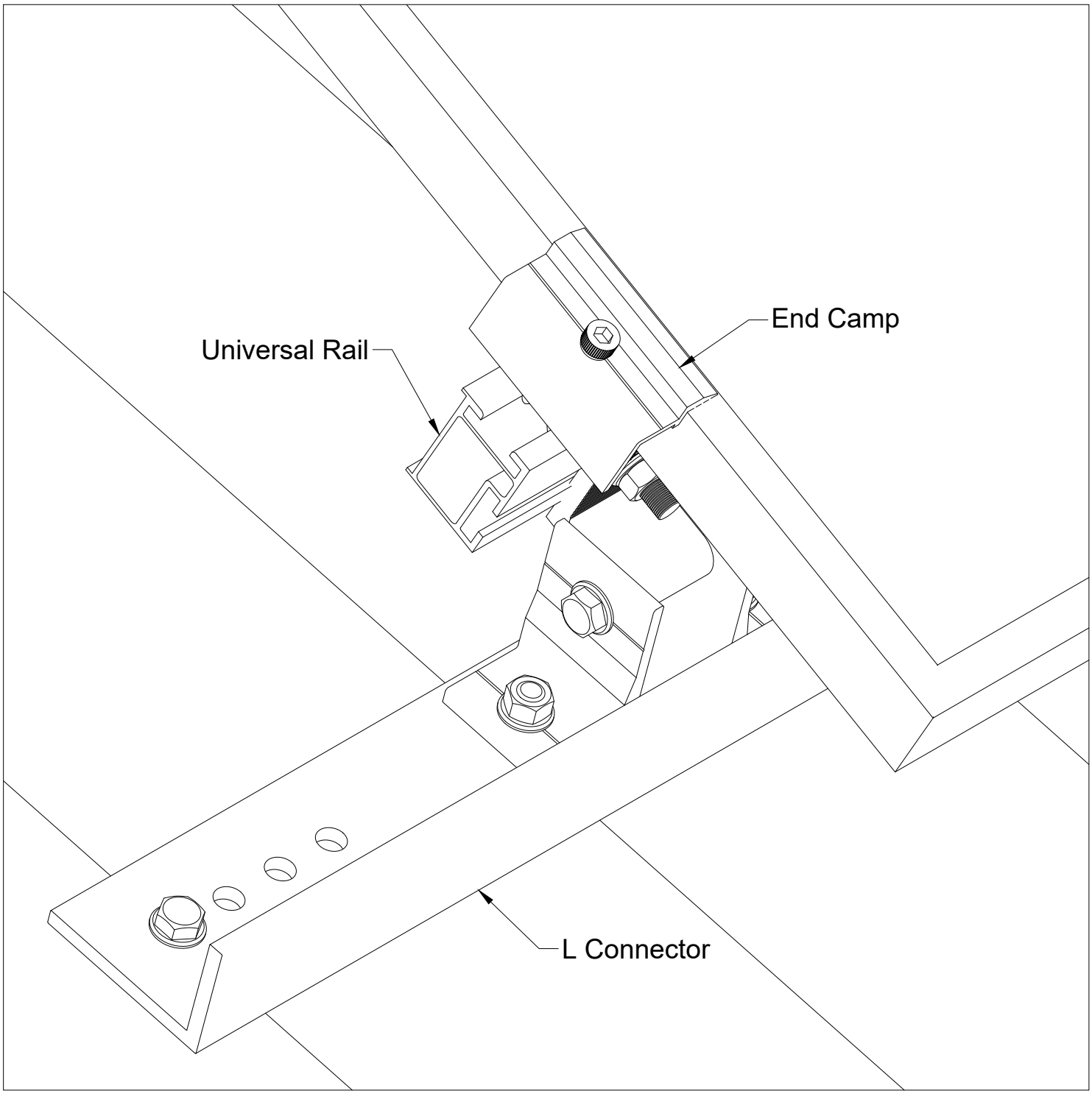
End Camp
Universal Rail
L Connector

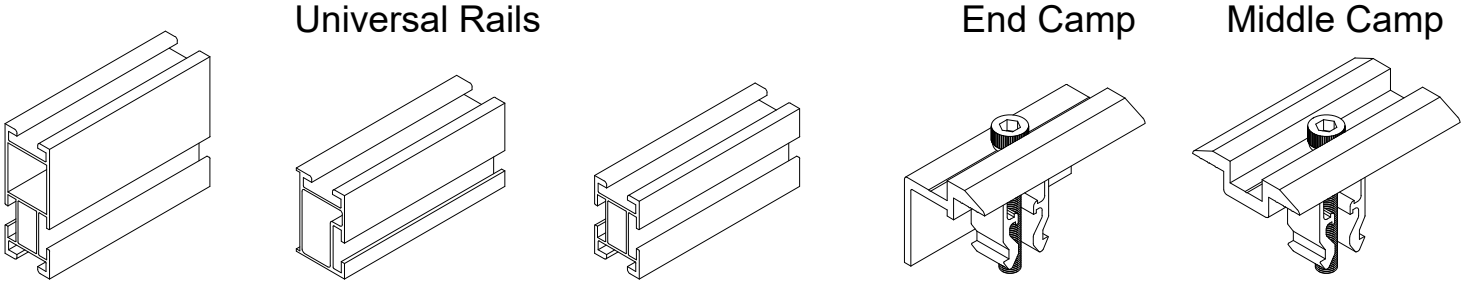
Universal Rails
End Camp
Middle Camp

BENKAM

ALU ARCHITECTS

BKSP 98

6 Fabrication and Assembly Instructions

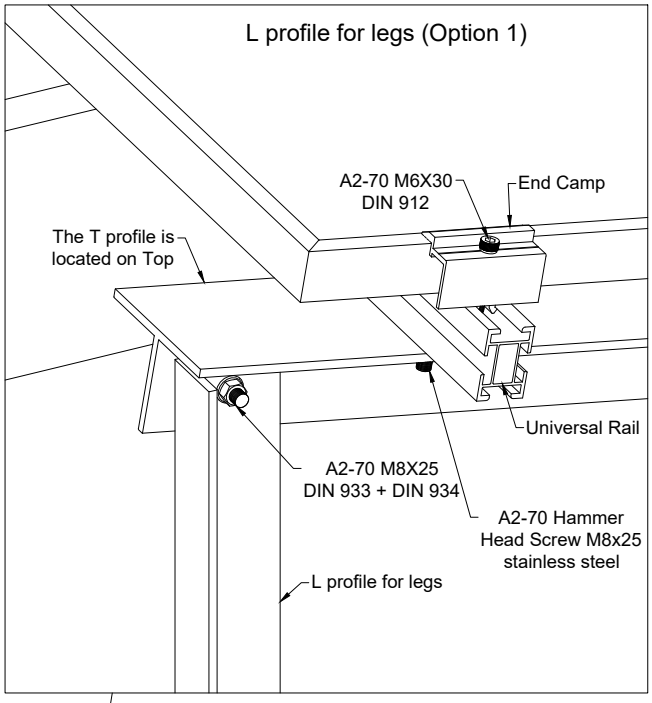

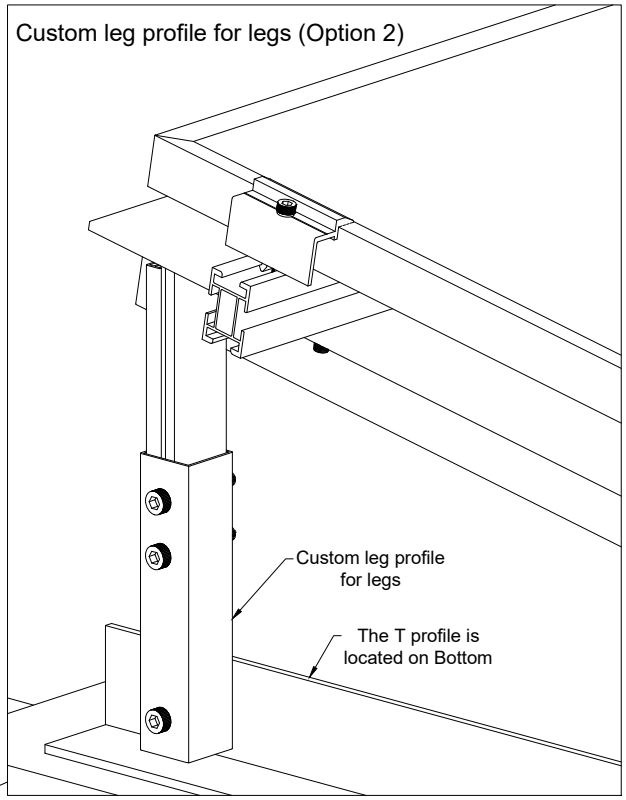

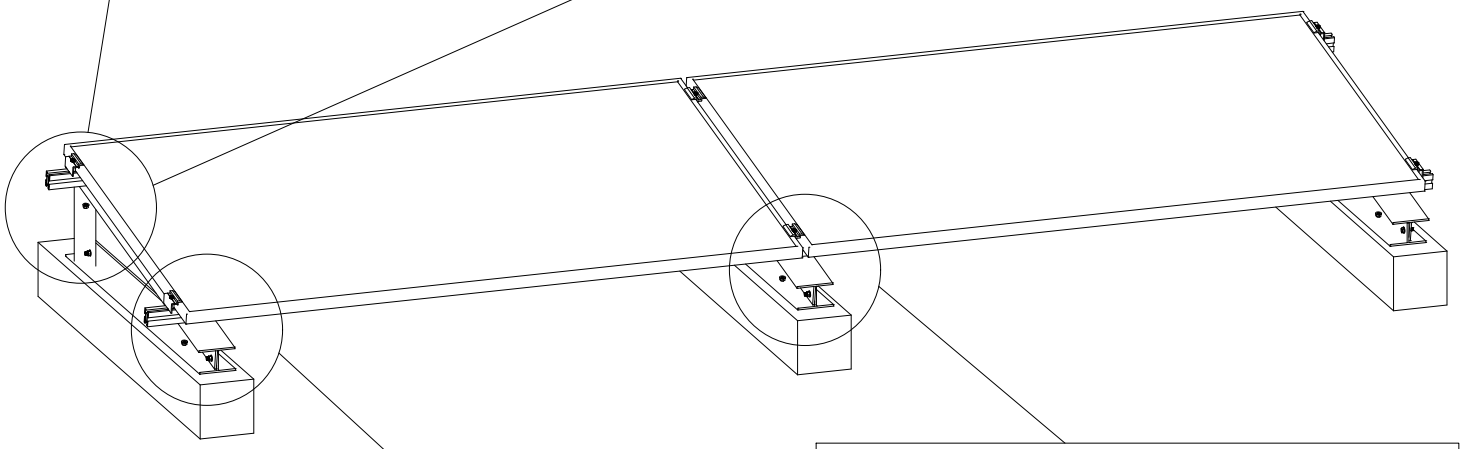

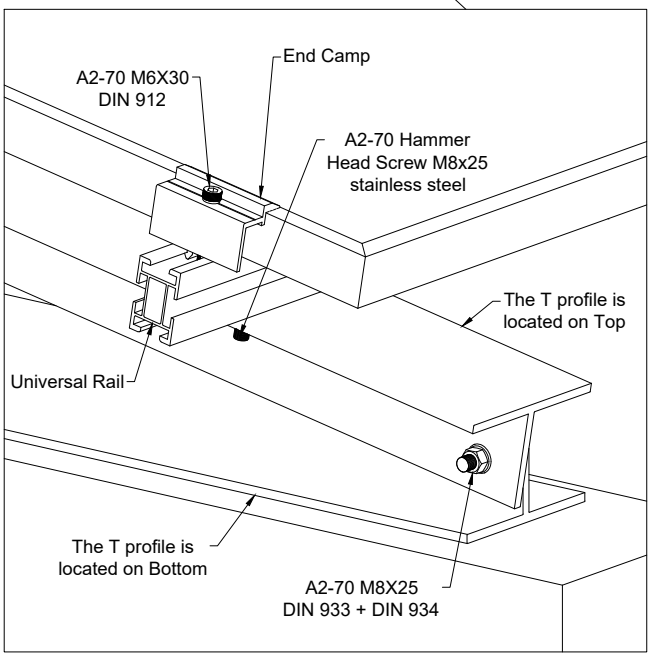

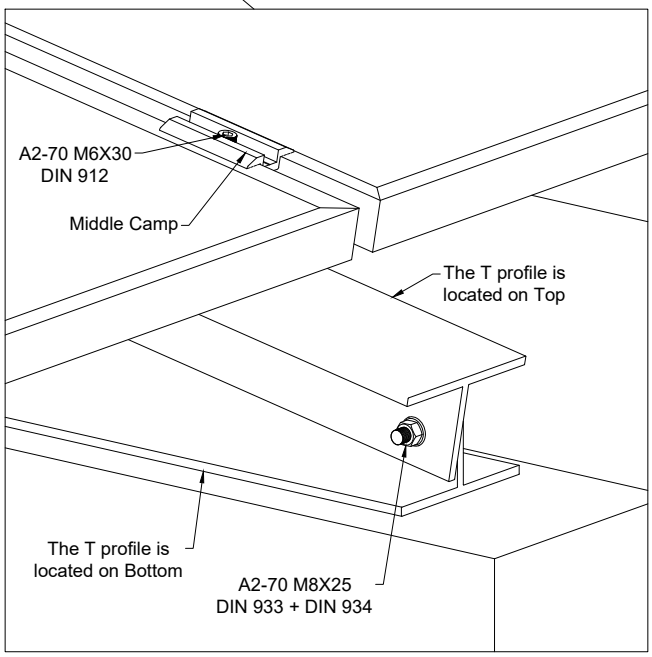

Watch with sheet 4-2

The T profile is located on Top

(T Profile Top)

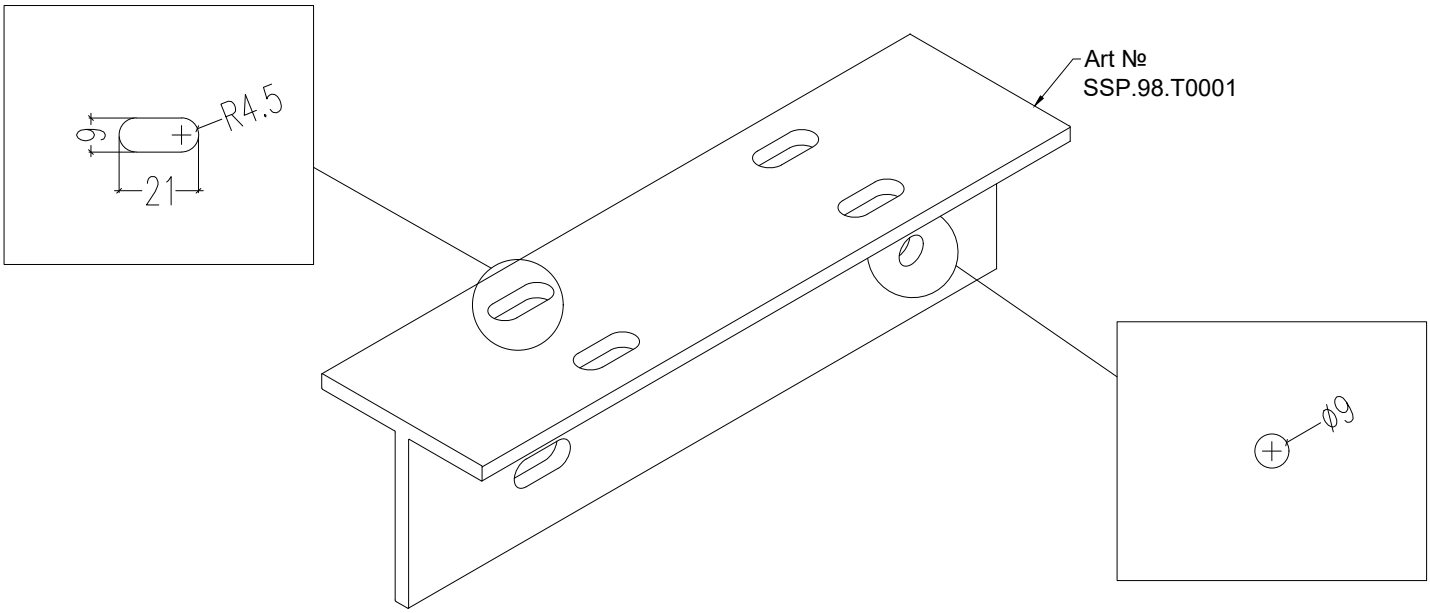

T1

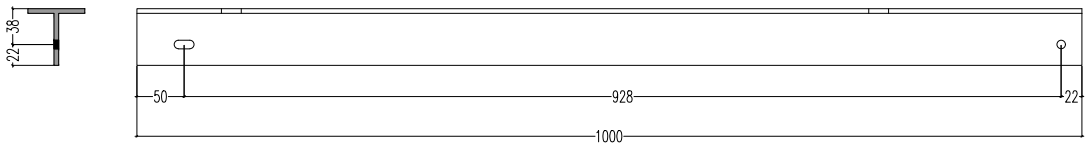

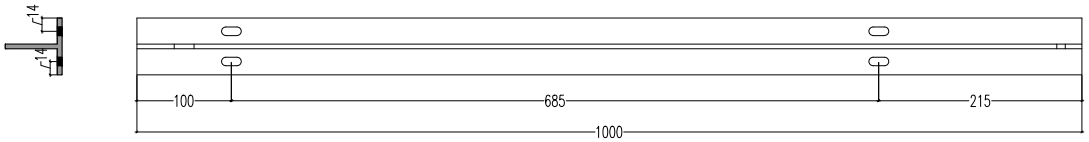

T2

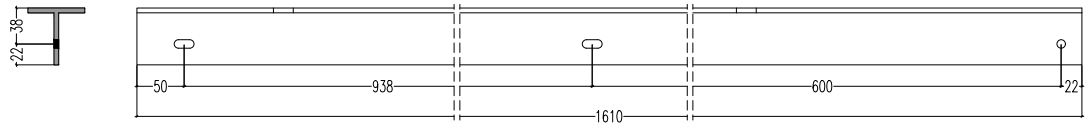

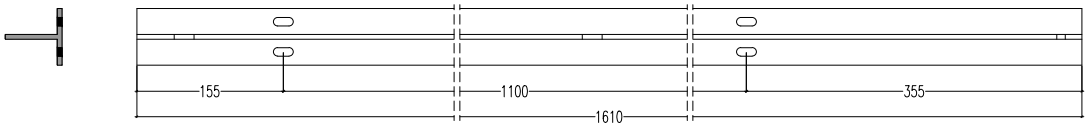

T3

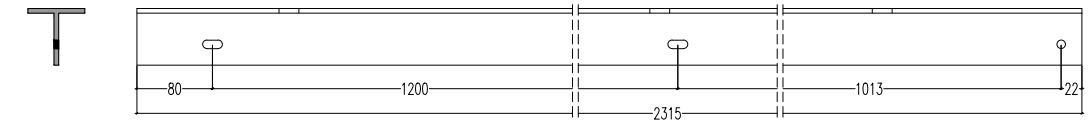

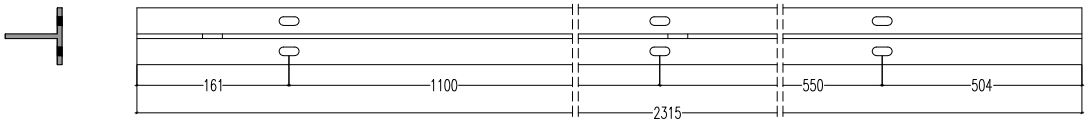

The T profile is located on Bottom

(T Profile Bottom)

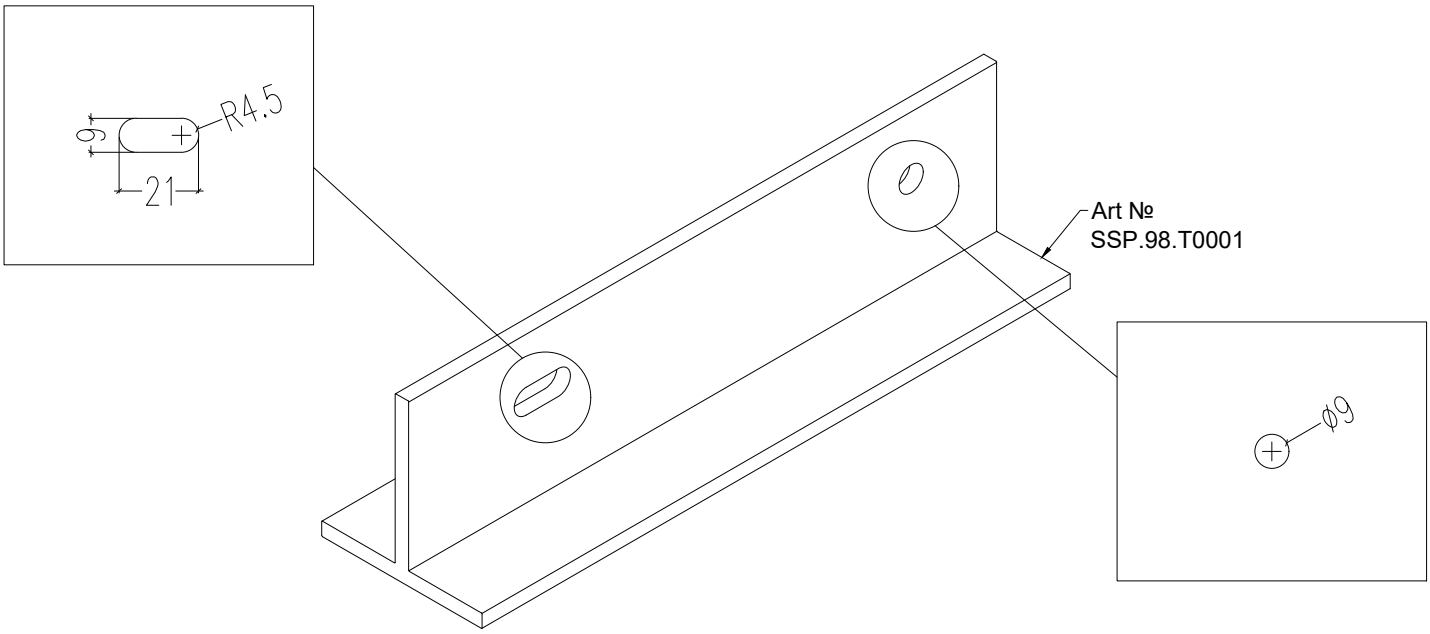

SSP.98.T0001

B1

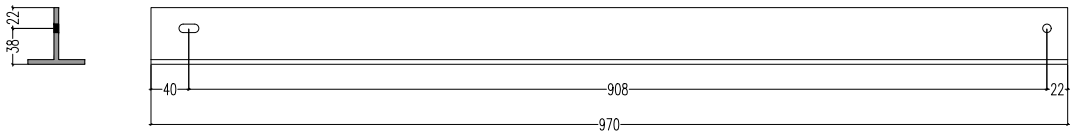

SSP.98.T0001

B2

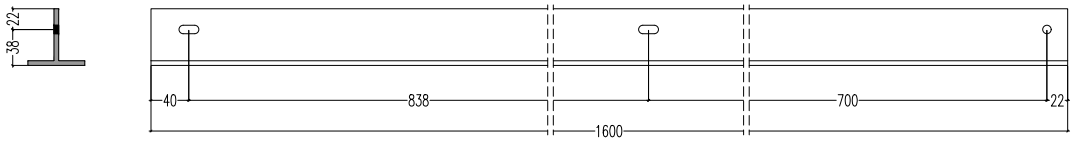

SSP.98.T0001

B3

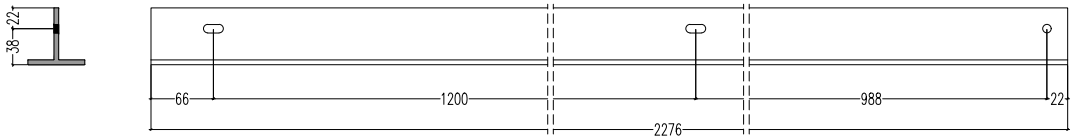

L profile for legs (Option 1)

(L Profile Leg)

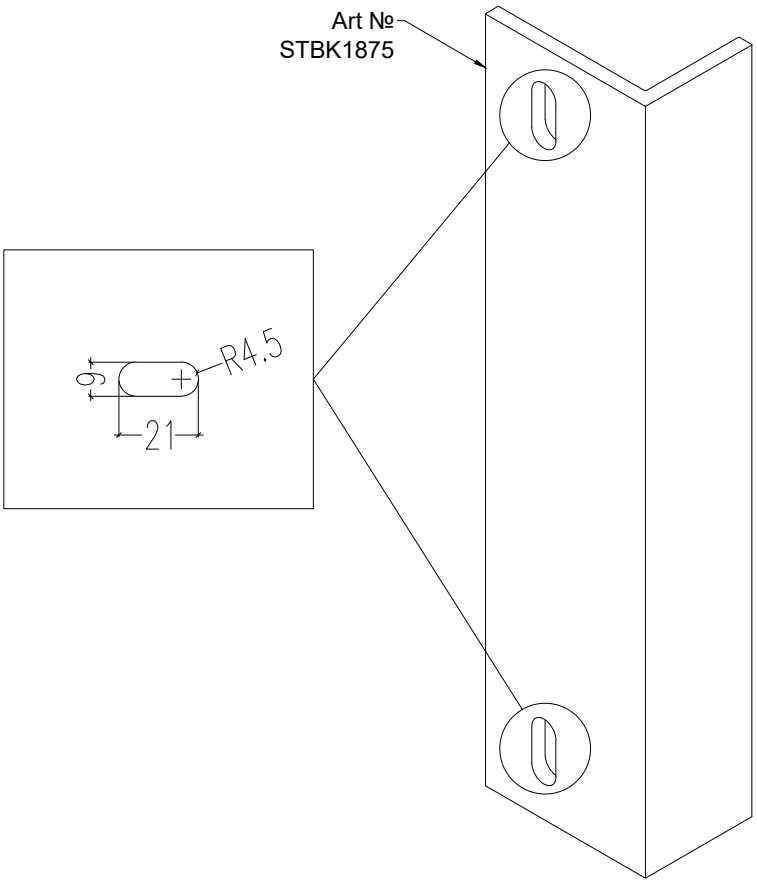

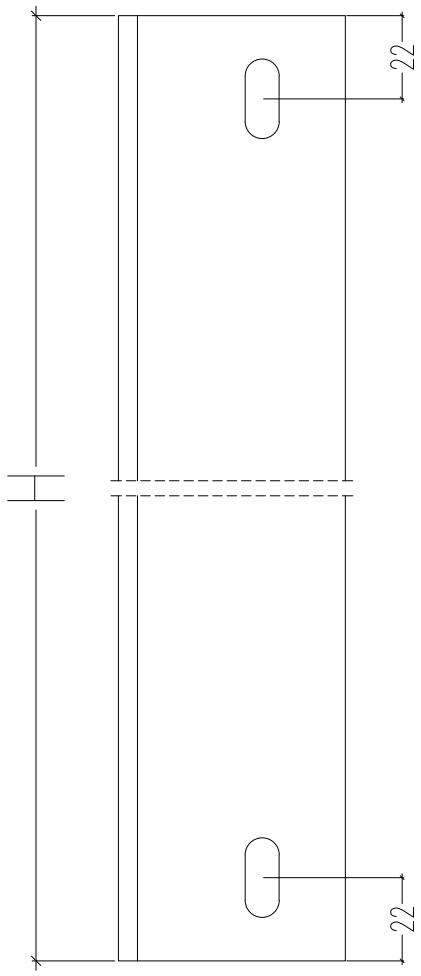

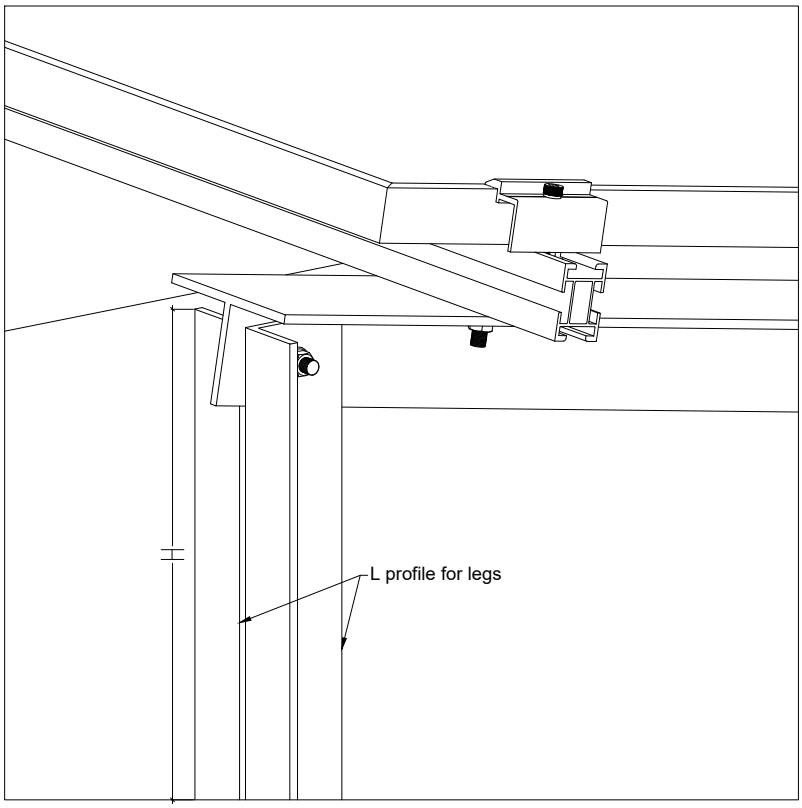

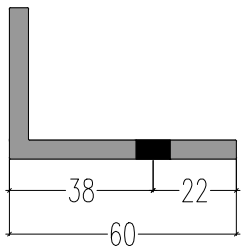

Custom leg profile for legs (Option 2)

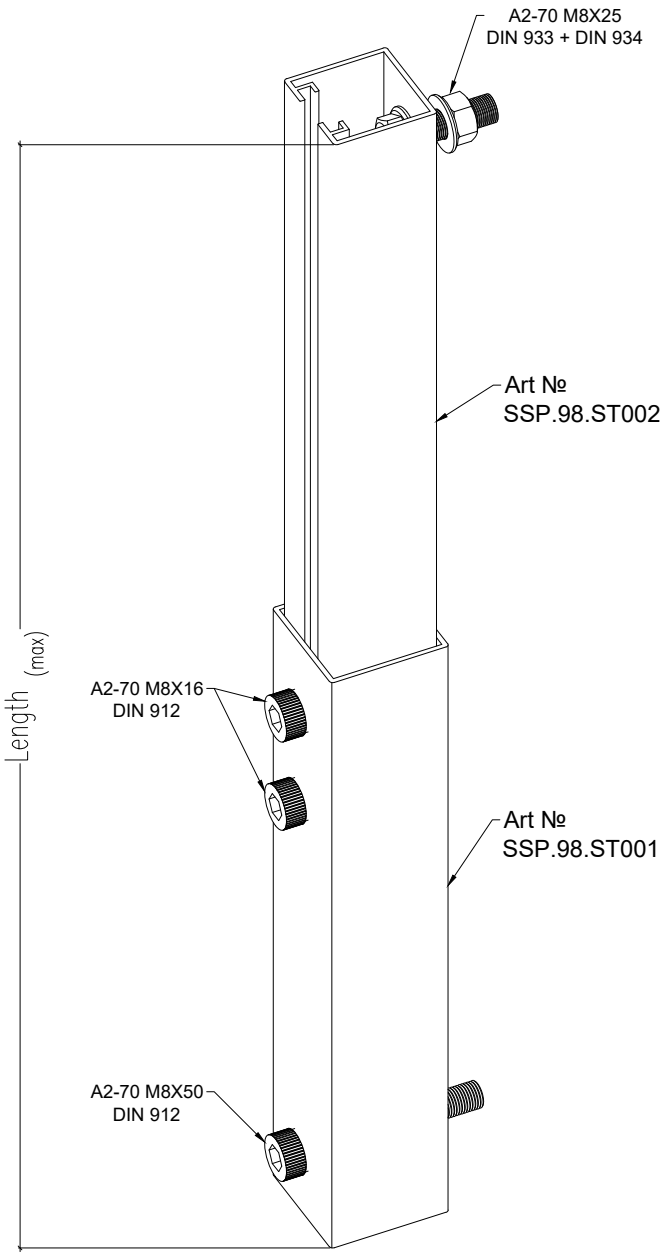

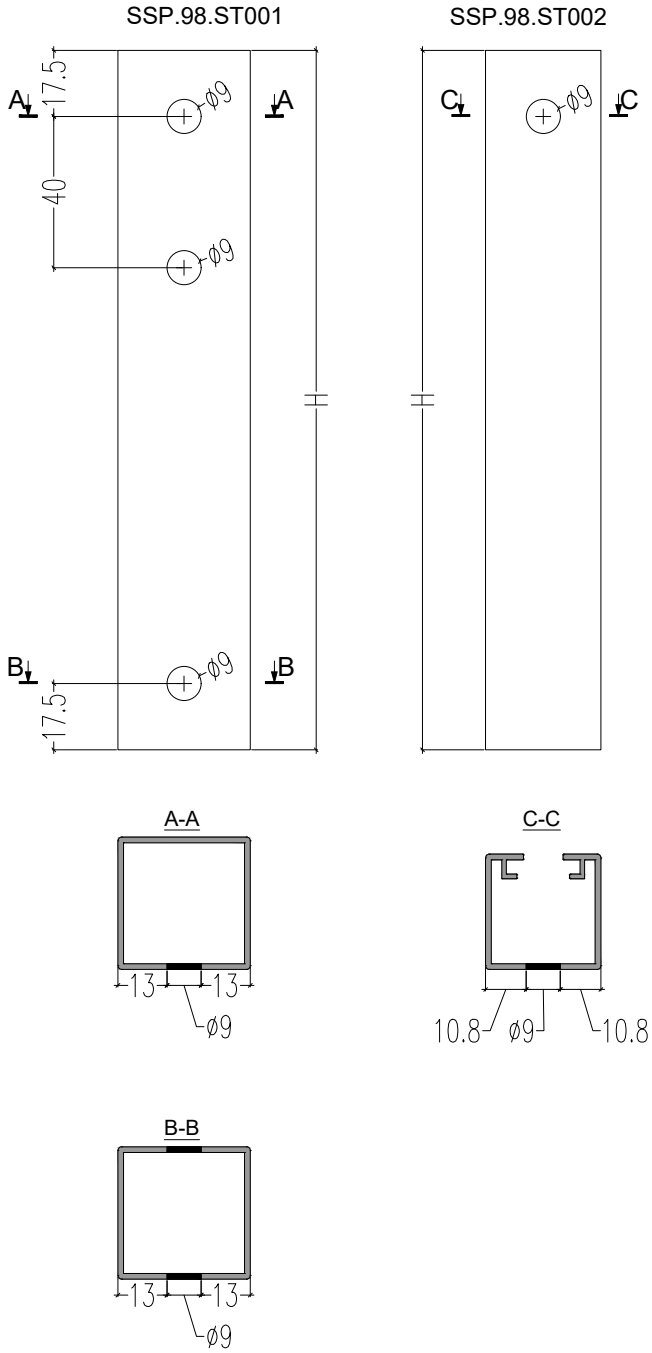

Leg Name	PROFILES	H	Length (max)	A2-70 M8X50 DIN 912	A2-70 M8X16 DIN 912	A2-70 M8X25 DIN 933 + DIN 934
S300	SSP.98.ST001 + SSP.98.ST002	300 mm	520 mm	1	2	1
S450	SSP.98.ST001 + SSP.98.ST002	450 mm	820 mm	1	2	1
S800	SSP.98.ST001 + SSP.98.ST002	800 mm	1450 mm	1	2	1

L profile for legs (Option 1)

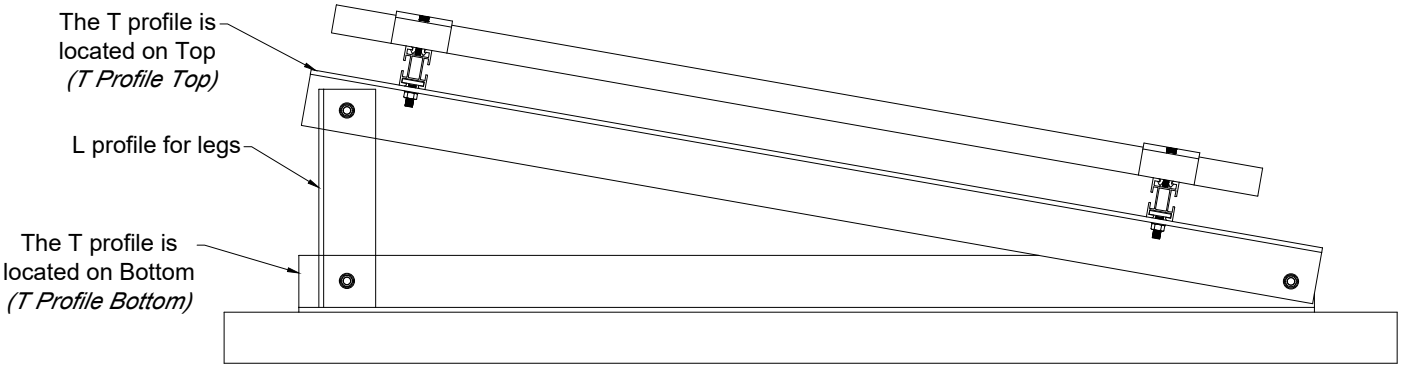

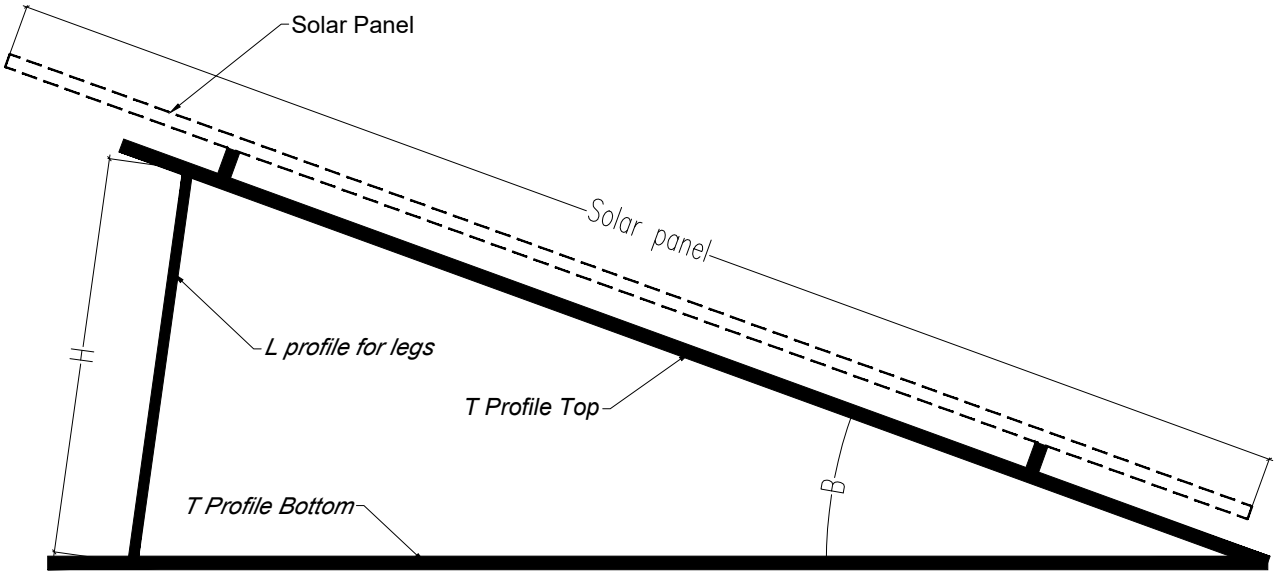

Option 1									
	750mm < Solar panel < 1200mm			1200mm < Solar panel < 1700mm			1700mm < Solar panel < 2400mm		
B	T Profile Top	T Profile Bottom	L Profile Leg (mm) H	T Profile Top	T Profile Bottom	L Profile Leg (mm) H	T Profile Top	T Profile Bottom	L Profile Leg (mm) H
15°	T1	B1	285	T2	B2	444	T3	B3	616
						444			616
						236			305
									305
20°	T1	B1	362	T2	B2	577	T3	B3	806
						577			806
						290			391
									391
25°	T1	B1	439	T2	B2	709	T3	B3	994
						709			994
						342			477
									477
30°	T1	B1	516	T2	B2	839	T3	B3	1181
						839			1181
						394			561
									561
35°	T1	B1	594	T2	B2	968	T3	B3	1365
						968			1365
						446			645
									645
40°	T1	B1	670	-	-	-	-	-	-

Fabrication and Assembly Instructions
(Option 1)

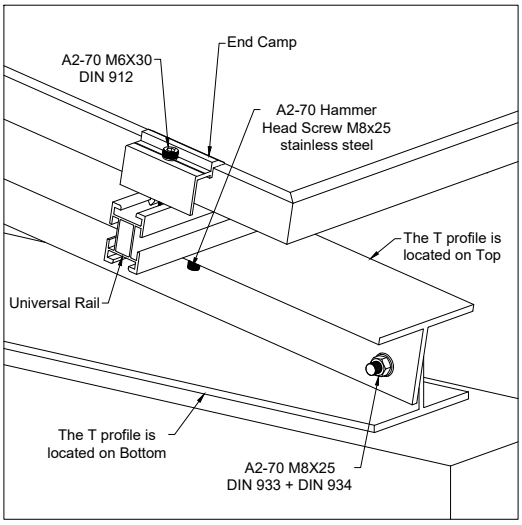

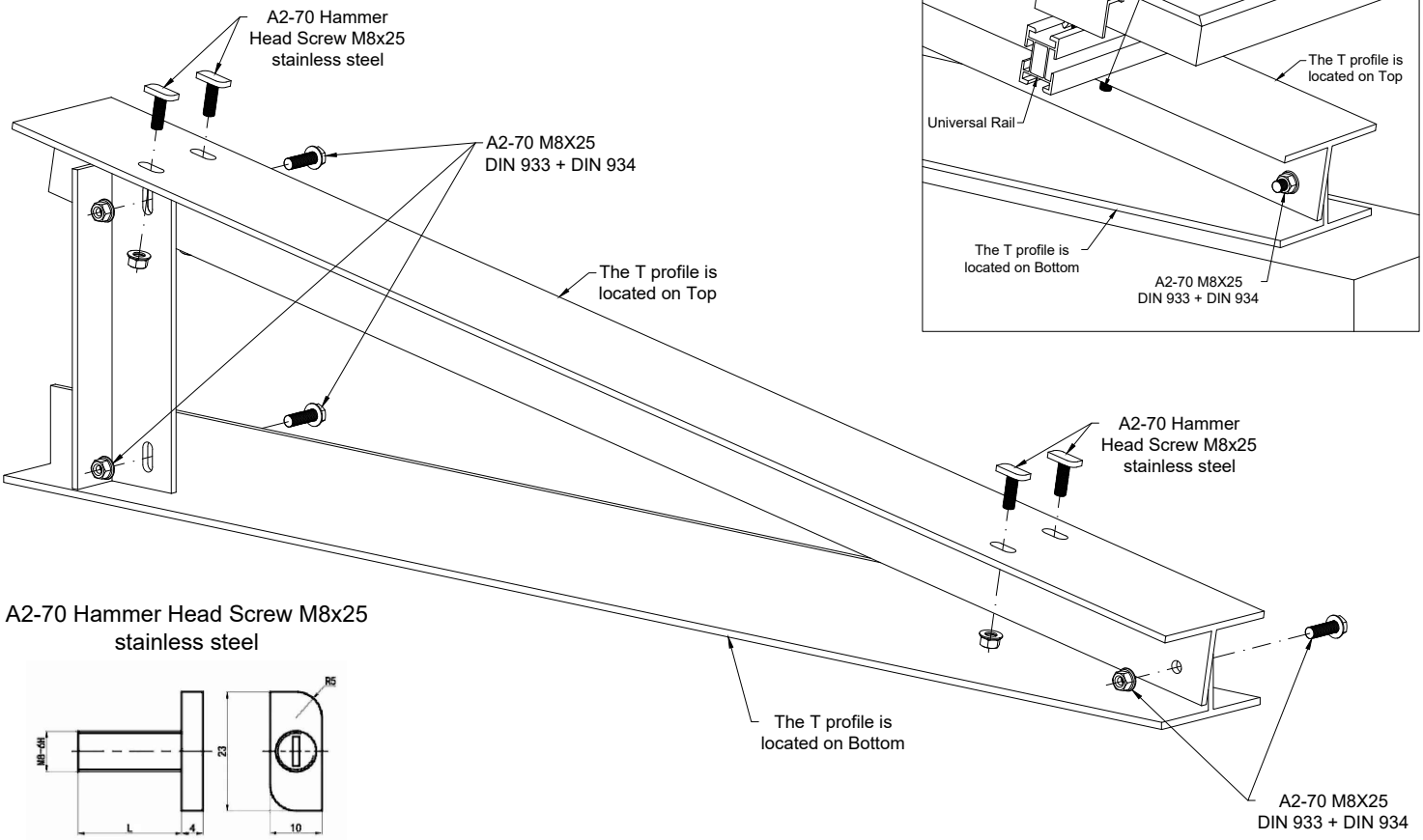

A2-70 Hammer Head Screw M8x25
stainless steel

	750 < Solar panel < 1200		1200 < Solar panel < 1700		1700 < Solar panel < 2400	
B	A2-70 M8X25 DIN 933 + DIN 934	A2-70 Hammer Head Screw M8x25 stainless steel	A2-70 M8X25 DIN 933 + DIN 934	A2-70 Hammer Head Screw M8x25 stainless steel	A2-70 M8X25 DIN 933 + DIN 934	A2-70 Hammer Head Screw M8x25 stainless steel
15°	3	4	5	4	5	4
20°	3	4	5	4	5	4
25°	3	4	5	4	5	4
30°	3	4	5	4	5	4
35°	3	4	5	4	5	4
40°	3	4	5	4	5	4

Custom leg profile for legs (Option 2)

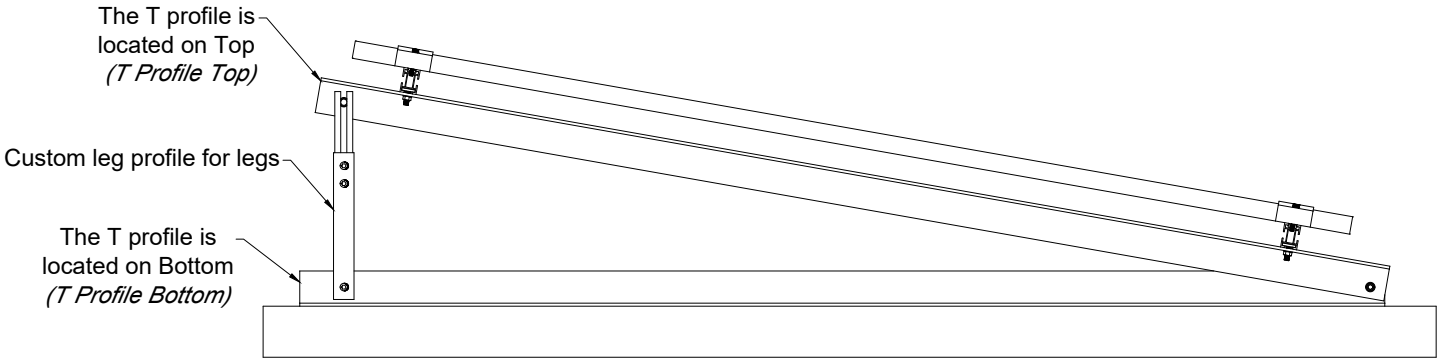

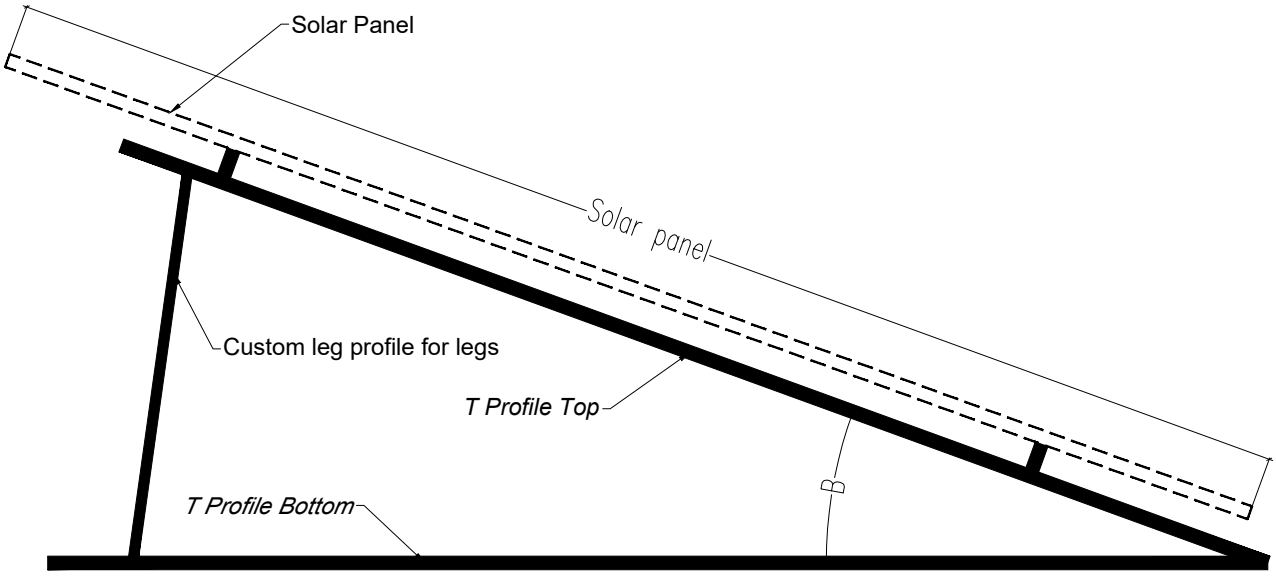

Option 2									
	750mm < Solar panel < 1200mm			1200mm < Solar panel < 1700mm			1700mm < Solar panel < 2400mm		
B	T Profile Top	T Profile Bottom	Custom leg profile for legs	T Profile Top	T Profile Bottom	Custom leg profile for legs	T Profile Top	T Profile Bottom	Custom leg profile for legs
15°	T1	B1	S300 = 285mm	T2	B2	S300 = 444mm	T3	B3	S450 = 616mm
						---			S300 = 305mm
20°	T1	B1	S300 = 362mm	T2	B2	S450 = 577mm	T3	B3	S450 = 806mm
						---			S300 = 391mm
25°	T1	B1	S300 = 439mm	T2	B2	S450 = 709mm	T3	B3	S800 = 994mm
						S300 = 342mm			S300 = 477mm
30°	T1	B1	S300 = 516mm	T2	B2	S800 = 839mm	T3	B3	S800 = 1181mm
						S300 = 394mm			S450 = 561mm
35°	T1	B1	S450 = 594mm	T2	B2	S800 = 968mm	T3	B3	S800 = 1365mm
						S300 = 446mm			S450 = 645mm
40°	T1	B1	S450 = 670mm	-	-	-	-	-	-

Fabrication and Assembly Instructions (Option 2)

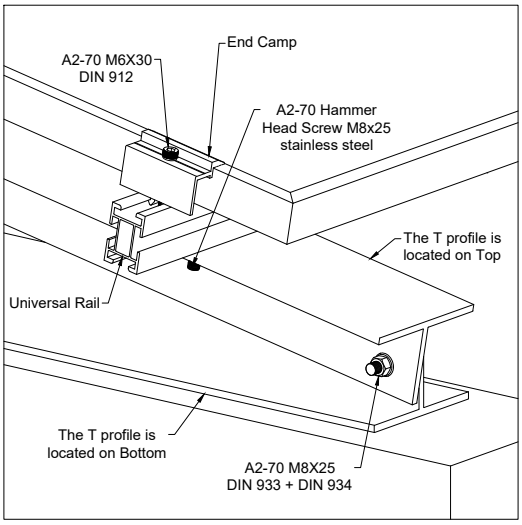

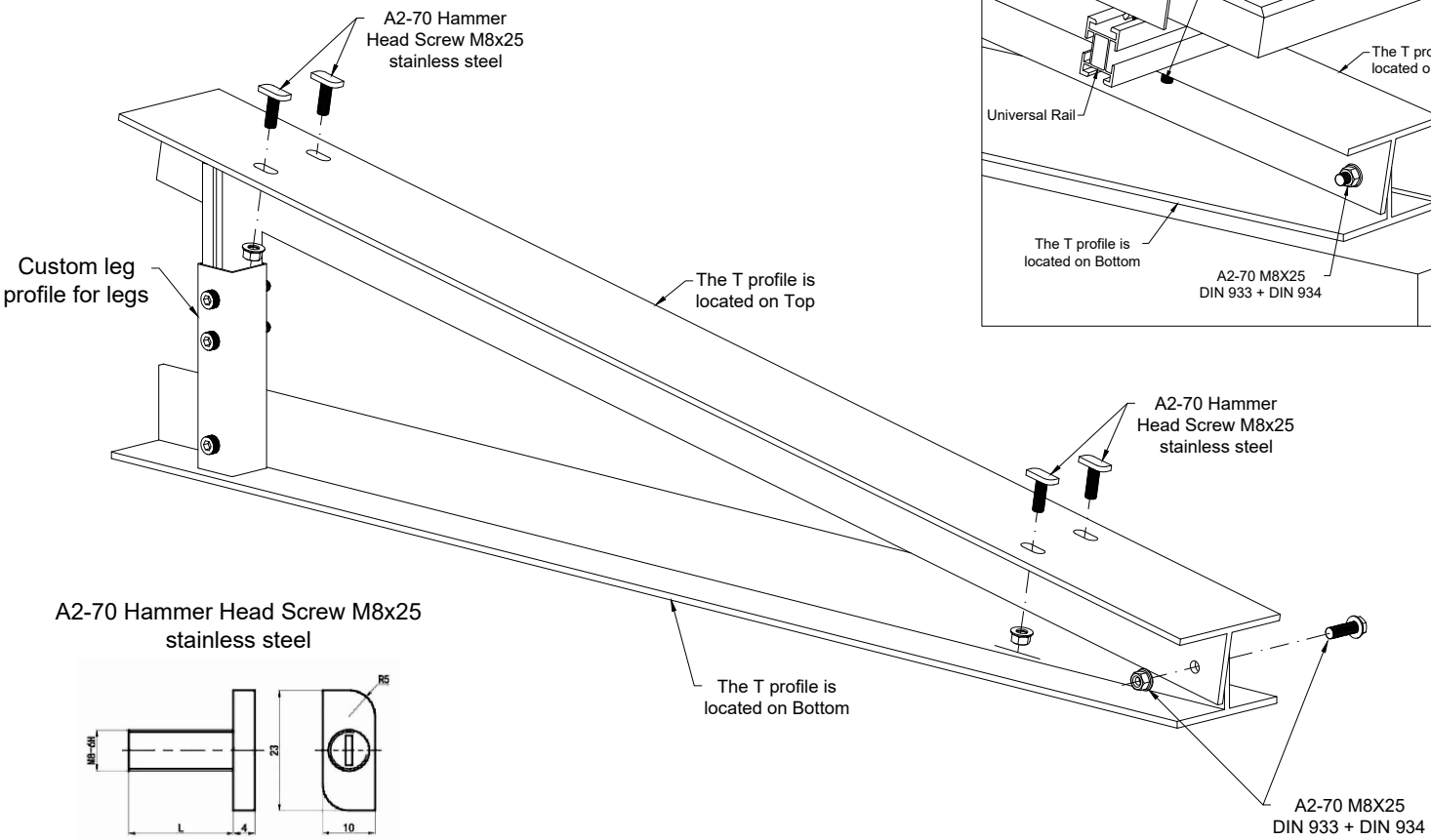

	750 < Solar panel < 1200		1200 < Solar panel < 1700		1700 < Solar panel < 2400	
B	A2-70 M8X25 DIN 933 + DIN 934	A2-70 Hammer Head Screw M8x25 stainless steel	A2-70 M8X25 DIN 933 + DIN 934	A2-70 Hammer Head Screw M8x25 stainless steel	A2-70 M8X25 DIN 933 + DIN 934	A2-70 Hammer Head Screw M8x25 stainless steel
15°	1	4	1	4	1	4
20°	1	4	1	4	1	4
25°	1	4	1	4	1	4
30°	1	4	1	4	1	4
35°	1	4	1	4	1	4
40°	1	4	1	4	1	4

BENKAM

ALU ARCHITECTS

BKSP 98

7 Notes

Notes