ECD 334

MINI PROJECT FIRST REVIEW

MediGuard 7X- A smart, secure medicine box for timely medication.

GUIDED BY :
Ms. ANJALI ANANTHAN
Asst. Professor of ECE Dept

GROUP MEMBERS:

ARJUN RAJ A	-	SPT22EC009
ANAMIKA K	-	SPT22EC006
NAVYA A P	-	SPT22EC018
MUHAMMED SAHAL N	-	SPT22EC017

CONTENTS

- Introduction
- Motivation
- Objective
- Scope and significance
- Literature Surveys
- Block diagram
- Methodology
- Components used
- Software Tool
- Work progress
- Final estimated cost
- Conclusion
- Work Plan
- References

INTRODUCTION

- The **MediGuard 7X** is a smart medicine box with seven compartments, a solenoid lock, fingerprint scanner, LED indicators, and a buzzer for secure and timely medication management.

- The **MediGuard 7X** offers a simple, secure solution for medication management, reducing confusion and improving adherence.

MOTIVATION

- Improved Medication Adherence
- Safety for Children
- Enhanced Accessibility
- Automation

OBJECTIVE

- Support Elderly and Special Needs Patients
- Ensure Lock Mechanism.
- Develop cost effective design.

SCOPE AND SIGNIFICANCE

- Wide Range of Users
- Safety and Security
- Support for Caregivers
- Prevention of Overdose or Underdose

LITERATURE REVIEW

- **Electronic Fingerprint Safe[1]**

This design uses:

- Automated door opening and closing system using Servo Motor
- Gear motor based mechanical lock
- Simple and effective safe vault

LITERATURE REVIEW

- **Short Messaging System Based Security Box using Arduino and GSM Module [2]**

This design uses:

- GSM Module (SIM800L) based automatic messaging system
- Automated door opening and closing system using MG996R Servo Motor

Contd…

LITERATURE REVIEW

- **Optimization of Trash Bin Usage Based on Internet of Things (IoT) [3]**

  - IoT based mobile notification
  - Ultra Sonic Sensor used for detection of interaction
  - A high-torque servo motor controls the lid's opening and closing, seamlessly integrating with a simple opening mechanism.

Contd…

LITERATURE REVIEW

- **Smart Medicine Box for Elderly Using Arduino Mega and IoT [4]**

A smart medicine box using:

- Arduino Mega 2560
- Wi-Fi module
- DS3231 RTC

Features: reminders, auto-lock, and mobile app monitoring for elderly medication management.

Contd…

LITERATURE REVIEW

- **IoT-Based Health Monitoring System with Medication Control [5]**

A medicine dispenser using:

- Arduino Mega
- DS3231 RTC
- Wi-Fi

Alerts via LCD and buzzer; caregivers can monitor schedules remotely.

Contd…

LITERATURE REVIEW

- **Design and Implementation of an Automated Medicine Dispenser [6]**

Features include:

- Automated compartment locking
- Arduino Mega with RTC
- Wi-Fi for remote updates and missed dose alerts

Contd…

LITERATURE REVIEW

- **Biometric-Based Medicine Locker for Elderly Care [7]**

A secure medicine locker using:

- R307 fingerprint sensor (for accurate biometric access)
- Solenoid lock with relay (for reliable locking)

Reduces dependency on keys/passwords, with high user satisfaction.

Contd…

LITERATURE REVIEW

- **Biometric Access for Secure Storage: Applications in Healthcare [8]**

A biometric system using:

- R307 fingerprint sensor (for high matching accuracy)
- Solenoid locks (for secure access)

Addresses environmental challenges with improved sensor calibration.

Contd…

LITERATURE REVIEW

- **Smart Medicine Box with Biometric and IoT Features [9]**

A smart medicine box using:

- R307 fingerprint sensor (for secure authentication)
- Solenoid lock with relay (for smooth locking)

Includes real-time alerts and monitoring to improve medication adherence.

Contd…

LITERATURE REVIEW

- **Buzzer Integration for Medication Alerts in IoT-Based Systems [10]**

  An IoT-based medication alert system with:

  - Buzzer for audible reminders
  - Alarms for missed doses
  - Adjustable sound levels
  - Accessible alerts for elderly users with visual impairments

Contd…

LITERATURE REVIEW

- **LED and Buzzer-Based Alert System for Smart Devices [11]**

A smart device alert system with:

- LEDs for visual status updates
- Red for missed doses and errors
- Green for on-schedule doses
- Buzzer for audio reminders

Features: enhanced usability, improved accessibility, and reliability for elderly users.

Contd…

LITERATURE REVIEW

- **Buzzer and LED-Based Notification System for Medication Management [12]**

  A medication management system with:

  - Green LEDs for upcoming doses
  - Red LEDs for missed doses
  - Buzzer for audible alerts

  Features: improved adherence to medication schedules, reduced missed doses, and enhanced accessibility for elderly users with sensory limitations.

Contd…

LITERATURE REVIEW

- **Enhanced Accessibility in Smart Devices Using LEDs and Buzzers [13]**

A healthcare device with:

- Multifunctional LEDs for real-time visual feedback
- Buzzer for critical audio alerts

Features: improved accessibility for visually or hearing-impaired patients, ensuring effective operation for elderly users.

BLOCK DIAGRAM

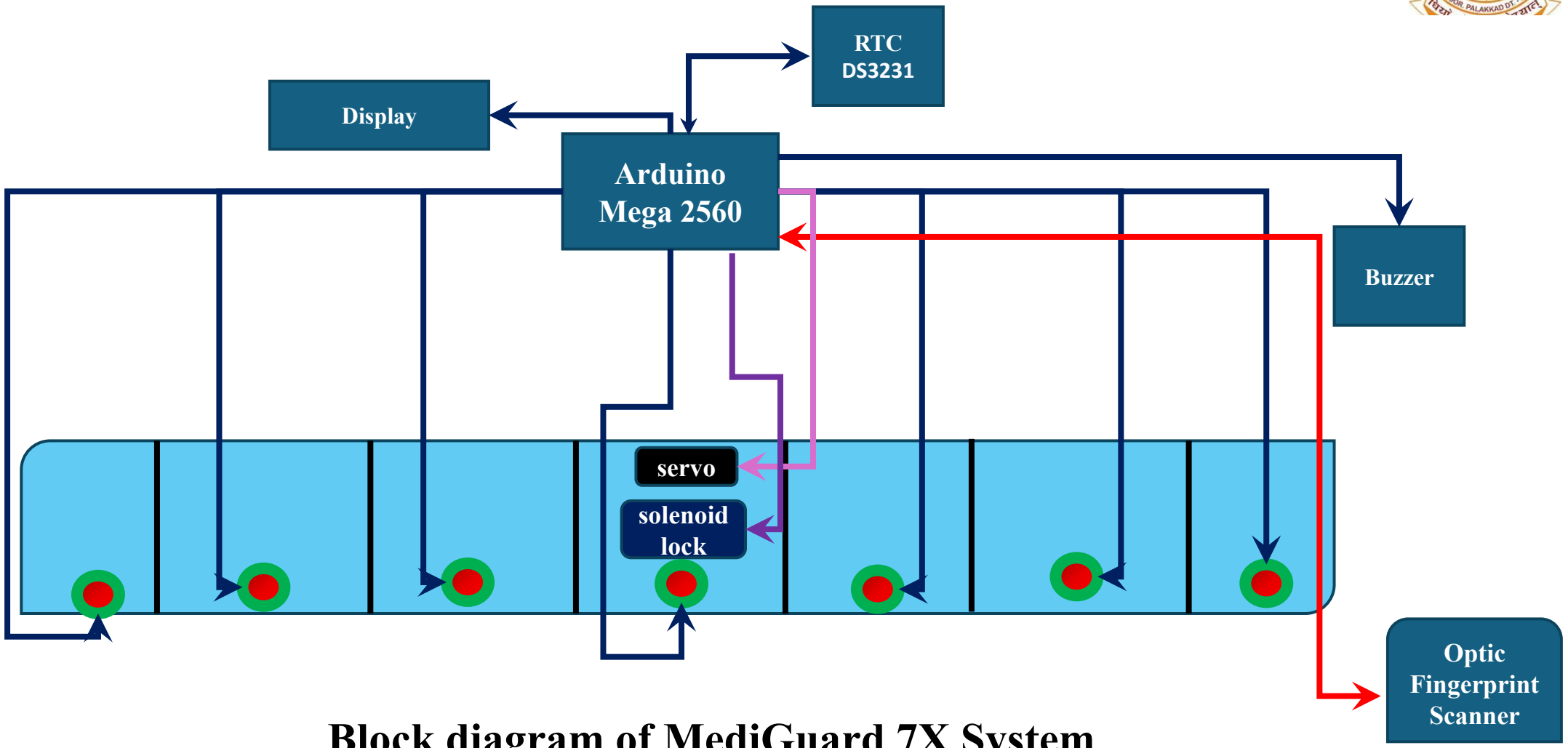

Block diagram of MediGuard 7X System

METHODOLOGY

- Organized Medication: Seven compartments for different times and instructions (before/after food).
- Time-Based LED Indicators: Green LED for the current time, red for others.
- Fingerprint Access: Authorized users open the box by scanning their fingerprint.
- Buzzer Alerts: Sounds at scheduled times until the patient accesses the box.
- Automatic Lid Closure: Lid closes after 10 minutes of inactivity.
- Refill Process: Caregiver opens the box using fingerprint; closes after 30 minutes.
- Security Features: Solenoid lock and fingerprint scanner for safety.

COMPONENTS USED

ARDUINO MEGA 2560

- Microcontroller: ATmega2560
- Digital Pins: 54
- Analog Pins: 16
- PWM Pins: 15
- Serial Ports: 4
- Memory: 256 KB Flash, 8 KB SRAM
- Clock Speed: 16 MHz

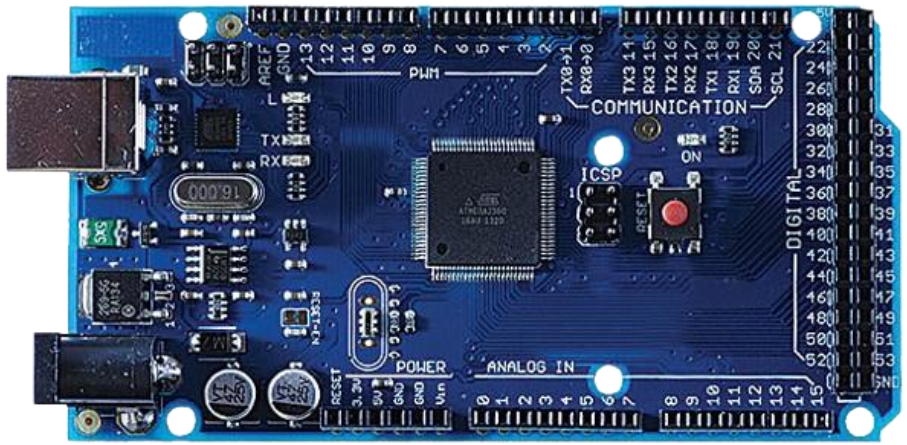

SERVO MOTOR (MG996R)

- Dimension: 40.7×19.7×42.9mm
- Stall torque: 9.4kg/cm (4.8v); 11kg/cm (6.0v)
- Operating speed: 0.19sec/60degree (4.8v); 0.15sec/60degree (6.0v)
- Operating voltage: 4.8 ~ 6.6V
- Gear Type: Metal gear

Contd…

COMPONENTS USED

I2C LCD DISPLAY

- Model: LCD1602
- Interface: I2C
- Interface Address: 0x27
- Character Color: White
- Backlight: Blue
- Supply voltage: 5V
- Board Dimensions(L x W x H) mm: 80 x 36 x 18

12V SOLENOID LOCK

- Holding force: 0.25 kg
- Energized forms: intermittent
- Unlocking time: 1s
- Dimensions: 54 x 42 x 28 mm (LxWxH)
- High quality ultra-compact electric lock

Contd…

COMPONENTS USED

Buck Converter : LM2596S

- Input voltage: 3-40V
- Output voltage: 1.5-35V(Adjustable)
- Output current: Rated current is 2A, maximum 3A
- Switching Frequency: 150KHz
- Conversion efficiency: 92%(highest)

Optical Fingerprint Reader Module : R307

- Operating voltage (v): 4.2 ~ 6 VDC
- Current consumption: ≤75mA
- Verification Speed: 0.2 sec
- Scanning Speed: 0.3 sec
- Character file size: 256 bytes

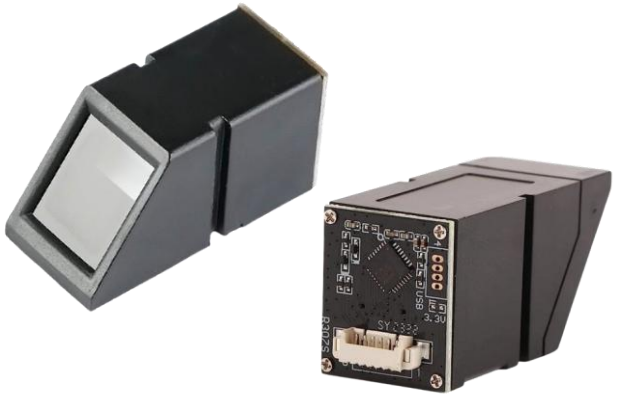

Contd…

COMPONENTS USED

GSM Module : SIM800L

- TTL serial port for serial port, you can link directly to the micro-controller.
- Don’t need MAX232.
- Power module automatically boots, homing network.
- Onboard signal lights all the way.

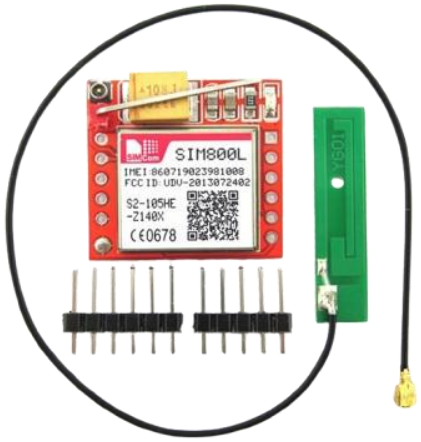

1 Channel 5V Relay Module

- Version: 5V
- Trigger: High or Low Level
- No. of Channel: 1
- Equipped with high-current relay : 15A @ 125V AC or 10A @ 250V AC

Contd…

COMPONENTS USED

RTC Module : DS3231

- High-precision DS3231 RTC with TCXO.
- Built-in 32Kbit EEPROM for data storage.
- I²C interface for seamless integration.
- Supports 12/24-hour time formats and YY-MM-DD date format.

Buzzer

- Input Voltage(Max.) : 5V
- Resistance: 42 Ω
- Resonance Frequency: 2048 Hz

RGB Led

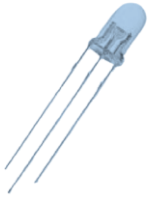

- Input Current (Max) : 20mA
- Input Voltage(Max.) : 2.0V
- Operating Temperature : -20 to 85

SOFTWARE TOOL

The **Arduino IDE** is a software used to write, compile, and upload code to Arduino boards. It's beginner-friendly and supports a wide range of Arduino boards. The programming language used in Arduino IDE are C/C++.

Libraries used in Arduino IDE;

- Fingerprint sensor: Adafruit_Fingerprint
- Servo motor: Servo
- GSM module: SoftwareSerial
- RGB LEDs: Adafruit_NeoPixel
- LCD: LiquidCrystal_I2C

Work Progress

- Identified the suitable Microcontroller for the project
  - Arduino Mega 2560
- Finalized the components required for the project to meet the specification
  - R307 – Fingerprint Sensor
  - DS3231 - RTC Module
  - SIM800L - GSM Module
  - MG996R – Servo Motor
  - LM2596S – Buck Convertor
  - 16x2 - I2C LCD Display
  - 12V – Solenoid Lock
  - 1 Channel 5V Relay Module
- Developed a proper knowledge about the Arduino IDE and C - Program

ESTIMATED COST

components	quantity	Total cost (INR)
Arduino Mega 2560	1	1250
Fingerprint Sensor (R307)	1	950
I2C LCD Display (16x2)	1	160
GSM Module (SIM800L)	1	200
RGB Led	14	20
Buzzer	1	10
Servo Motor (MG996R)	1	230
12V Solenoid Lock	1	320
RTC Module (DS3231)	1	110
Buck Convertor (LM2596S)	3	180
1 Channel 5V Relay	1	70
Structural Components	-	200
Total		**3700**

CONCLUSION

- The **MediGuard 7X** project is a secure, automated medication management system that ensures timely intake through fingerprint authentication, reminders, and a solenoid lock.
- It reduces caregiver burden, improves adherence, and is scalable for homes or healthcare settings, offering a reliable solution for better patient safety and medication management.

WORK PLAN

December, 2024	Topic selection
January, 2025	Topic finalizing and finding research papers & finalizing components
February, 2025	Setting up hardware components
March, 2025	Developing program for microcontroller & prototype testing

BIBLIOGRAPHY

[1] Flecker, Bryton, Carlos Bucheli, and Tristan Arias. "Electronic Fingerprint Safe." (2022): 1.

[2] Ayon, Safial Islam. "Short Messaging System Based Security Box using Arduino and GSM Module." Journal of Telematics and Informatics (JTI) 6.1 (2018): 2303-3703.

[3] Adrian, Ari, and Muhammad Saleh. "Optimization of Trash Bin Usage Based on Internet of Things (IoT)." Telecommunications, Computers, and Electricals Engineering Journal (TELECTRICAL) 2.1: 52-64.

[4] "Smart Medicine Box for Elderly Using Arduino Mega and IoT“ by S. Gupta, R. Sharma, and M. Verma (2022) is referenced in the paper "Smart Medicine Remainder Box for Elderly People with loT" by S. S. S. R. K. Prasad et al., published in 2024.

[5] "IoT-Based Health Monitoring System with Medication Control" by N. Sharma, A. Bansal, and P. Raj (2023) is referenced in the paper "loT based Medicine Box Assistance for Elderly People" by Rajalakshmi M et al., published in the International Research Journal on Advanced Engineering and Management, Volume 2, Issue 7, July 2024, pages 2157-2163.

[6] "Design and Implementation of an Automated Medicine Dispenser" by R. Kumar, S. Yadav, and D. Mehta (2023) is referenced in the paper "Design and Implementation of an Automated Medicinal-Pill Dispenser with Wireless and Cellular Connectivity" by Chanuka Bandara et al., published in the Advances in Science, Technology and Engineering Systems Journal, Volume 8, Issue 3, pages 161-169, in 2023.

Contd…

BIBLIOGRAPHY

[7] V.mehta, A.Desai and R.Joshi “Biometric-Based Medicine Locker for Elderly Care” , IEEE Transactions on Healthcare system, vol.11,no.3,2023,pp.150-155,doi:10.11091 THS2023.2023.00150

[8] P-Sharma, M.Verma, and K.singh, “Biometric Access for Secure Storage: Applications in Healthcare”2022 international conference on healthcare innovations(1CH1), New Delhi, india, 2022,pp.101*105,doi:10.1109/1CH12022.2022.00101

[9] K.N. Rao, S. Tiwari, and Mkulkara, “Smart Medicine Box with Biometric and IoT Features”, journal at biometric application, vol.16,no.2 , 2022, pp.80-85 doi:10.1016/JBA2022.2022.00220

[10] R. Verma, S. Jain, and T. Roy,"Buzzer Integration for Medication Alerts in loT-Based Systems," 2023International Conference onEmbedded loT (ICEloT), Bangalore, India, 2023, pp. 100-105, doi: 10.1109/ICEloT2023.1010321.

[11] N. Kumar, T. Ahmed, and R. Singh,"LED and Buzzer-Based AlertSystem for Smart Devices," 2023IEEE International Conference onSmart Automation (ICSA),Hyderabad, India, 2023, pp. 45-50, doi: 10.1109/ICSA2023.1010309.

[12] K. Reddy, J. Rao, and V. Singh,"Buzzer and LED-BasedNotification System for MedicationManagement," 2021 IEEEConference on loT Healthcare (loTH), Chennai, India, 2021, pp.110-115, doi: 10.1109/ IoTH2021.1010245.

[13] P. Malhotra, R. Jain, and T. Kaur,"Enhanced Accessibility in Smart Devices Using LEDs and Buzzers,"2023 International Conference onHealthcare Automation (HCA),Erode, India, 2023, pp. 75-80, doi:10.1109/HCA2023.1010280.

THANK YOU