The Maglev Bogie: A Proof of Concept

Akhil Gharpurey[1], Joshua Chun[2]

[1] Texas Guadaloop, University of Texas at Austin
[2] Texas Guadaloop, University of Texas at Austin

Table of Contents

I. Introduction to the Bogie 3

II. In-Depth Analysis on the Bogie 4

A. Modeling of the Bogie 8

B. Simulation of the Bogie 9

III. Projected Costs and Manufacturing Feasibility 10

IV. Conclusion 12

I. Background on the Bogie

The maglev bogie is a design used in magnetically levitating trains in China and South Korea. It serves as a unit of the train's structure meant to house electromagnetic and mechanical suspension systems, as well as the linear motor drivetrain. This paper seeks to utilize concepts established by the bogie and implement them into the design of a Hyperloop pod.

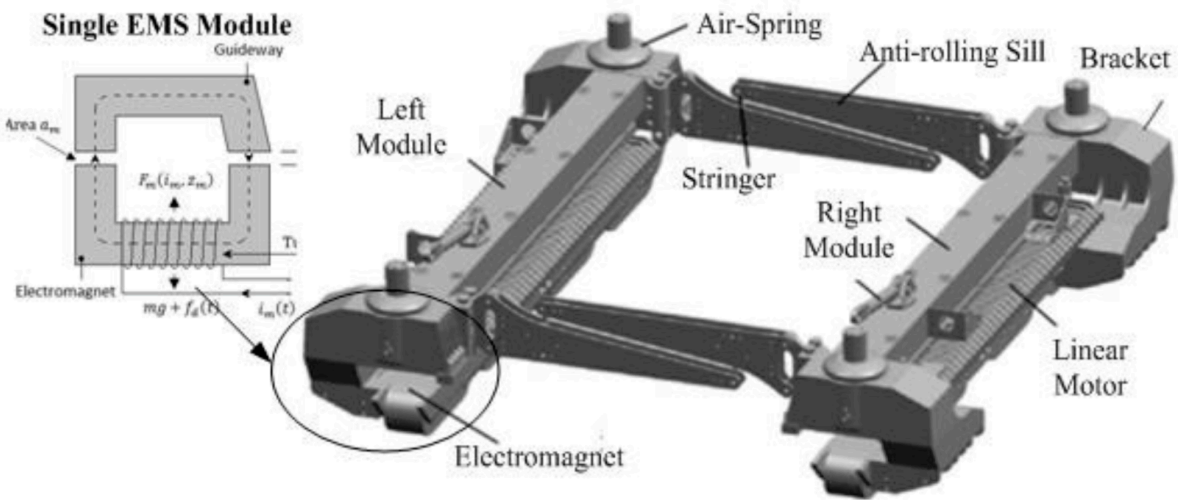

Figure 1: Contemporary Maglev Bogie using EMS Suspension

The ultimate reason we are opting for this bogie design is due to its consolidated nature. It is capable of harboring electromagnetic suspension, mechanical suspension, linear induction motor, and pneumatic braking calipers/wheel mounts in one dynamic structure. This will make integrating the dynamics into the pod significantly easier, as mounting will only take place between the top of the air springs and the bottom of the frame. Additionally, implementing this bogie requires the pod to be in a right-side-up configuration, meaning that in the event of maglev failure, the bogie is capable of catching the pod. This reduces the number of subsystems to consider, as there is no need for an external catching system similar to last year's.

The bogie also promises large longevity, as there are several projects the bogie will allow us to invest in. Last year's design relied on wheels that were only free to roll about its central axis. This restricts the pod's linear motion to one dimension and also prevents the pod from steering itself back on course in the event of an external disturbance. The bogie design alleviates this problem; it prioritizes the use of guidance magnets at the bottom of the track, allowing the pod to steer about a curvilinear track. The ability for the pod to turn also opens paths to invest in lane switching, motion on a vertically sloped path, and even the potential to create a railway network across Texas. Additionally, integrating EMS into the bogie opens paths for optimizing control methods for the electromagnets, so that vibrations caused by the fluctuating current are minimized and the pod is free to travel smoothly. Ultimately, the bogie design is highly versatile and is a major door-opener for Texas Guadaloop as a whole.

A limitation we might observe is the lack of failsafe systems within the bogie. In the case of electrical failure, the pod may demagnetize and fall onto the track. Without any failsafe system, this may damage the bogie and generate heat. We will therefore add wheels with brake rotors onto the top of the bogie and integrate a pneumatic braking system to properly bring the pod to a stop within an effective braking distance.

II. In-Depth Analysis of the Bogie

In dynamic systems, there are six degrees of freedom that we need to control: translational motion in the x, y, and z directions, and rotational motion about each of these axes, known as pitch, roll, and yaw, respectively. These displacements originate from forces exerted upon the system. In our case, letting the x-axis indicate forward motion and the z-axis indicate vertical motion, the electromagnetic systems each generate forces that manipulate displacements

in either of these directions. The yokes generate a magnetic force affecting the z-displacement, and a differential in magnetic force across the bogie can create a rotation about the pitch or roll axes. The LIM also generates a force that propels the pod forward, creating motion along the x-axis. However, it also generates a repulsive force which can affect displacements along the y-axis.

In terms of constraints, we want to restrict the motion of the pod to x-displacement, as we do not want the pod to fall off track. The bogie will be vital in limiting motion only to the pod's desired forward movement by forcing any rotation and extraneous translation into an equilibrium position. The bogie has four major components shown in Figure 1: the left module, the right module, and the two anti-roll bars. The left and right modules are both responsible for housing the levitation yokes and the LIM. These modules are subjected to forces from the weight of the pod and the electromagnetic attraction between the yokes/LIM and the track. These forces may act on a slight offset from the modules' centroidal axes, so the module could be subject to a moment about its centroidal axis. If uncontrolled, this will cause excessive angular displacements about the roll axis, rendering the bogie useless. The anti-roll bar mechanism alleviates this problem by implementing a spring-dashpot mechanism to force rolling into an equilibrium position. We can utilize a free-body diagram to model the forces on the modules in both the front and side planes.

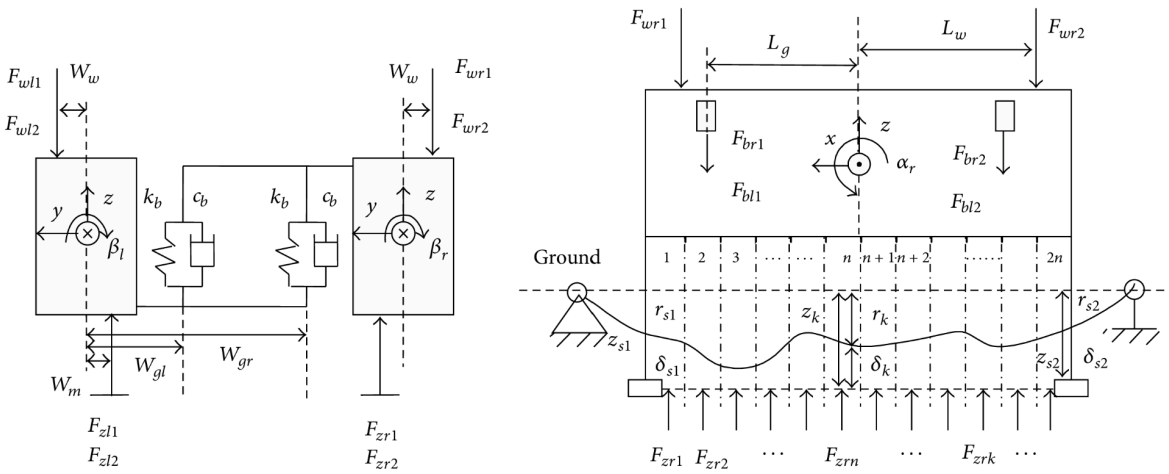

(a) Forces of the maglev bogie from rear view

(b) Forces of the right module from side view

Figure 2: Free-Body Diagram of the Modules from Rear (Front) and Side Views

If a module rotates about its roll axis, the springs in the anti-roll bar compress, generating a reactionary moment to counteract the effects of the pod weight and maglev forces. Since the spring is placed in parallel with a damper, the anti-roll bars are capable of returning the bogie into an equilibrium position over a time period.

To implement this system in real life, we must determine the optimal spring constant and damping coefficient. Using the free-body diagrams in Figure 2, we can derive the following force-balance equations from first principles:

$$\Sigma F_R = -m_R g - F_{wR1} - F_{wR2} - F_{bR1} - F_{bR2} - F_{bL1} - F_{bL2} + \sum_{k=1}^{2} F_{zRk} = m\ddot{z}_R \quad (1)$$

$$\Sigma F_L = -m_L g - F_{wL1} - F_{wL2} + F_{bR1} + F_{bR2} + F_{bL1} + F_{bL2} + \sum_{k=1}^{2} F_{zLk} = m\ddot{z}_L \quad (2)$$

$$\Sigma M_{O,pitch} = (F_{wR2} - F_{wR1})L_w - (F_{bL1} + F_{bR1} - F_{bL2} - F_{bR2})L_g - \sum_{k=1}^{2n} \left(\frac{2n+1-2k}{4n}\right) F_{zRk} L_x = J_{\alpha R}\ddot{\alpha}_R \quad (3)$$

$$\Sigma M_{O,roll} = -(F_{wL1} + F_{wL2})W_w - (F_{bL1} + F_{bL2})W_{gL} - (F_{bR1} + F_{bR2})W_{gR} + \sum_{k=1}^{2n} F_{zRk} W_m = J_{\beta R}\ddot{\beta}_R \quad (4)$$

These equations model the effects of the forces exerted on the bogie modules in terms of translational displacements. In this case, F_w represents the weight force at one of the four corners of the bogie, F_b represents the reaction force from the shocks in the anti-roll bar, and F_{zk} represents the electromagnetic force caused by the yokes. Since our system will only have two yokes on either bogie module, we only have to consider two electromagnetic forces. Since the spring-dashpot components are on both sides of the bogie, the compression of the spring on one side can control the motion of the module on the other side. This effect is critical to analyze, as neglecting this could provide an overestimate of the optimal spring constant and damping coefficient, creating a potentially overdamped system. This is a suboptimal outcome, as overdamped suspension systems can take too long to force the system back into equilibrium. To account for the effects caused by these parameters, we can rewrite each F_b and F_w as shown below:

$$F_{bij} = c_b \dot{z}_{bij} + k_b z_{bij} \tag{5}$$

$$F_{wij} = c_w \dot{z}_{wij} + k_w z_{wij} \tag{6}$$

We can substitute equations (5) and (6) into (1), (2), (3), and (4) to complete our force and moment balance equations. The resulting differential equations are very difficult to solve by hand, so we will utilize MATLAB to model the phase space of these differential equations. The goal of each spring-loaded component within the bogie is to quickly return the pod to a stable equilibrium. This is reflected in the phase space as an inward spiral towards a point. We will therefore determine the optimal spring constant and damping coefficient by plugging in a dataset of possible values for each variable into MATLAB. The resulting phase space with the quickest return towards equilibrium using feasible quantities will depict the best-choice k and c values.

IIa. Modeling of the Bogie

To model the bogie, it is important that we account for the interactions between it and other subsystems. The model below shows each component of the bogie from a front view with subsystem interactions pointed out.

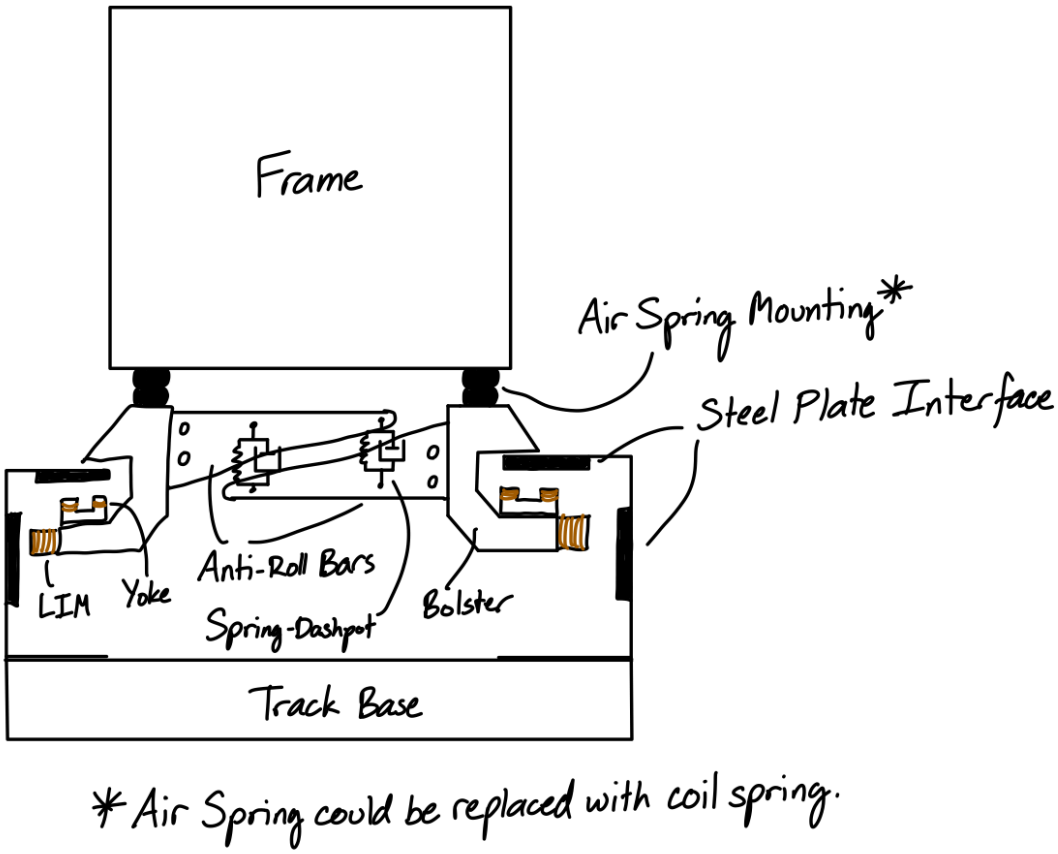

Figure 3: Integration of the Bogie with the Pod

To model this system in further detail, we need to figure out the mounts for the yokes and LIM in a specific manner. Since the LIM interfaces with the vertical part of the track, we cannot accommodate space on the existing bolsters without spending an excessive quantity on material. We will likely take advantage of the module beams to create and attach a separate bolster for the LIM.

IIb. Simulation of the Bogie

As shown in Figure 2, the bogie will be subject to several loads. To guarantee this, we seek to ensure that the bogie structure has a safety factor of 2. To rigorously evaluate the technical feasibility of the bogie, we must run several simulations. With the exception of testing for optimal spring constant and damping coefficient values, we will run these simulations using SolidWorks FEA software. The table below indicates the types of analyses we must run and the associated scenario.

Analysis Type	Scenario	Justification of Testing
Static	Weight of Pod exerted on the bogie frame	Test for bending of the bogie bolster under load
Static	Levitation force (unengaged)	Test for bending of the bogie bolster under load
Static	Weight of Pod + Levitation force (unengaged)	Test for bending of the bogie bolster under load
Modal Dynamic	Impulse forces on bogie	Test the spring-loaded components of the bogie on their ability to mitigate displacements
Random Vibration	Vibration generated by LIM and yokes	Test the structural integrity of the bogie under vibrational loading caused by the electromagnetic systems
Thermal	Brake rotor when caliper is engaged	Test to ensure that the brake rotors do not exceed 70^0C
Topology	Bogie Mass Reduction Testing	In case there is any excess material we can afford to remove, which can lighten the weight of the pod overall
Fatigue	Bogie under oscillatory loading over time	Shows the lifetime of the bogie.

Table 1: List of Scenarios to be Simulated

The scenarios listed are not all of the scenarios that the bogie will experience. For instance, we will not test the pod when subject to the engaged levitation force. This is because the static analyses are designed to test the structural integrity of the bogie to its limit. Since the yokes utilize a Hybrid Electromagnetic Suspension (HEMS) configuration, the engaged levitation force will be less than the unengaged levitation force. Therefore, simulating this scenario statically serves minimal purpose to evaluating the pod's structural integrity.

III. Projected Costs and Manufacturing Feasibility

Our plan to manufacture will be a stepwise process throughout the spring semester. We require that the bogie must be lightweight but must also maintain structural integrity. The bogie should be lightweight so that the overall weight of the pod is optimized, reducing the required current to supply the magnetic levitation yokes. However, it must simultaneously withstand large static and dynamic loads from the pod and external disturbances. Therefore, several constraints are placed on the manufacturing process and the material selection. Metals are often used in industrial structural applications, as they are very strong and fail at very large strain values which the loading scheme cannot achieve. We have several choices of metals, such as aluminum, steel, brass, nickel, cobalt, and titanium. To narrow down these choices, we need to consider their strength-to-weight ratios, magnetic permeability, machinability, and per-unit cost. Aluminum has a high ultimate tensile strength, low density, and low magnetic permeability, and is highly machinable and cheap. Therefore, aluminum is the most logical choice for selecting a material. Of the different aluminum alloys available, aluminum 6061-T6 is the best option for machining and welding, which are two operations we anticipate using.

For our bogie design, we need to house electronic components such as wires and controllers inside it. This is to create an organized wiring process for the electromagnetic systems

so external disturbances will not adversely affect the electrical connection between them and power electronics. Therefore, components such as the bogie bolster and the module connector beams must be hollow on the inside. Solving this with the module connector beams will be simple; we can buy hollow rectangular beams with our desired dimensions. To solve this constraint with the bogie bolsters, we will use aluminum plates and join them to create the geometry of the bolster. Our joins will consist of both welds and bolts; we will manufacture bolt fixtures to join larger bodies and will weld any joins between smaller regions.

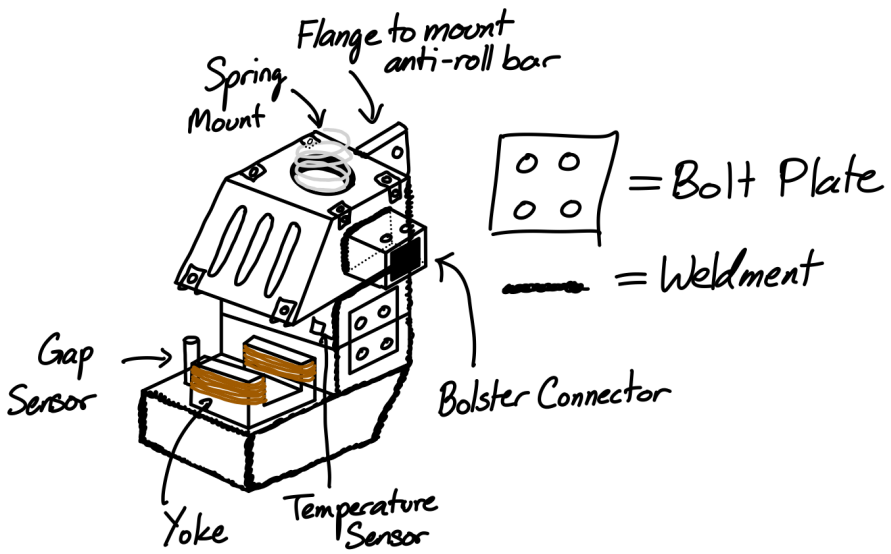

Figure 4: Manufacturing Plan for the Bogie Bolster

In terms of key procurement items for manufacturing the bogie, we will need to purchase aluminum plates, hollow rectangular aluminum bars, and shock absorbers. Using our current CAD model, each of the four bolsters has a surface area of about 4.15 x 10^5 mm^2, making for a total of 1.66 x 10^6 mm^2. Additionally, each of the eight anti-roll bars has a surface area of 57,748 mm^2, resulting in a total of 461,981 mm^2. Assuming procurement from MetalSuperMarket, we will need two plates of 48” x 48” aluminum 6061-T651 (0.313” thickness), which costs $1151.82

in total. The shock absorbers we require are 6 inches in length with springs strong enough to support at least 315 kg of weight. One option is this shock absorber commonly used in bikes (https://www.amazon.com/LYYCX-Absorber-Stainless-Accessories-Suspensions/dp/B099X5KH91). The per-unit price is $38.19, and since we require four of these shocks, the total price is $152.76. We will also require air springs to mount between the bogie and the frame. One option that seems feasible is the Firestone 1/2" 267C1.5 2500 Style Air Bag, costing $129.99 each. We will require 4 air springs, bringing the total cost to $519.96. Therefore, for major components of the bogie, we will spend $1,824.54. This number is our lower bound for cost, as we may find more components to procure throughout the semester. However, Given our $3,000 budget, we have $1,175.46 at our disposal.

IV. Conclusion

The maglev bogie proves to be a feasible design for the 2024-2025 build cycle. It is contemporarily applied in real-world situations across the world, and it possesses the capabilities that any suspension system should have. It provides a maintainable interface between the electromagnetics and track and organizes each system concisely, making systems integration significantly easier. The cost estimate also falls well within the prescribed budget for this year, as the primary expenditures are spring components and aluminum plates. While the bogie is a large system with complex modeling, it is an important step in the process of developing a full-scale Hyperloop pod, and Texas Guadaloop can easily expedite the design and manufacture of it.

References

Liu, Y., Deng, W., & Gong, P. (2015). Dynamics of the bogie of maglev train with distributed magnetic forces. Shock and Vibration, 2015, 1–12. https://doi.org/10.1155/2015/896410

Sun, Y., Li, W., Chang, D., & Teng, Y. (2016). Dynamic and Decoupling Analysis of the Bogie with Single EMS Modules for Low-speed Maglev Train. *International Conference/Workshop on Automation of Software Test*.