ONE-PIECE TOILET

DBR-M505

Washdown flushing
Size:640x360x800mm
P-trap:180mm Roughing-in

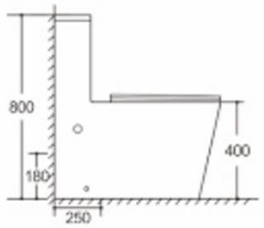

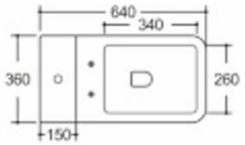

DBR-M101

Tornado flushing
Size:690x360x790mm
P-trap:180mm Roughing-in

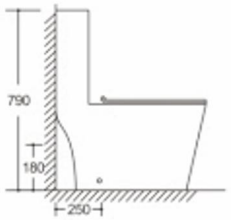

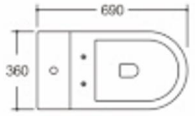

DBR-M404

Washdown flushing
Size:690x370x810mm
P-trap:180mm Roughing-in

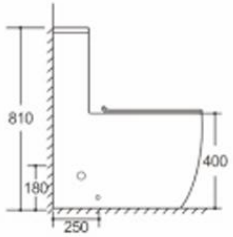

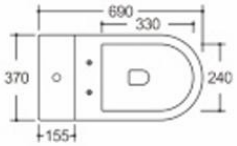

DBR-M808

Washdown flushing
Size:670x355x800mm
P-trap:180mm Roughing-in

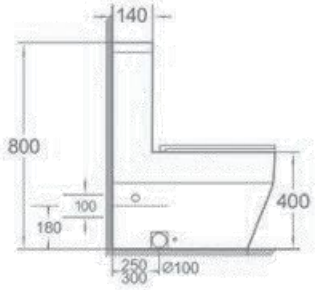

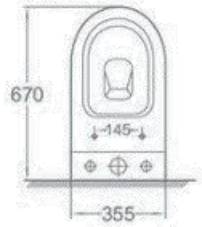

DBR-M707

Washdown flushing
Size:700x400x790mm
P-trap:180mm Roughing-in

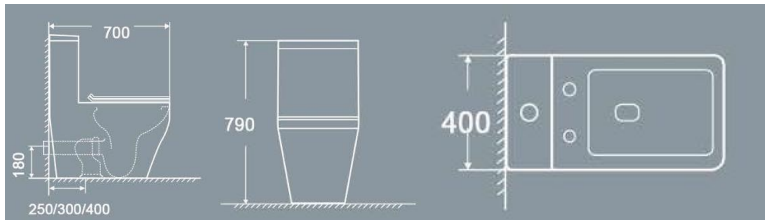

M2201

Washdown flushing
Size:650x360x810mm
P-trap:180mm Roughing-in

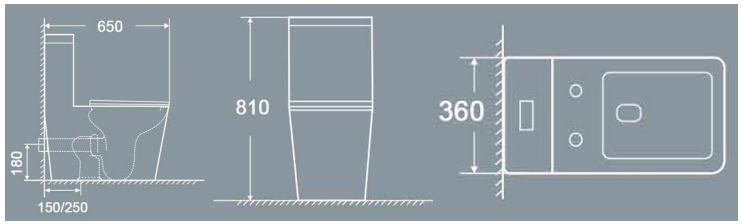

M2202

Washdown flushing
Size:680x365x810mm
P-trap:180mm Roughing-in

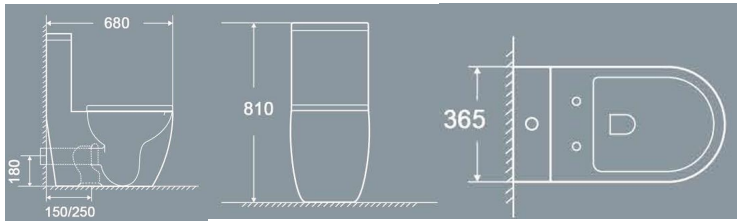

TWO-PIECE TOILET

M6005

Washdown Close-couched Closet
Size:650x340x770mm
S-trap,250mm Roughing-in
P-trap,180mm Roughing-in

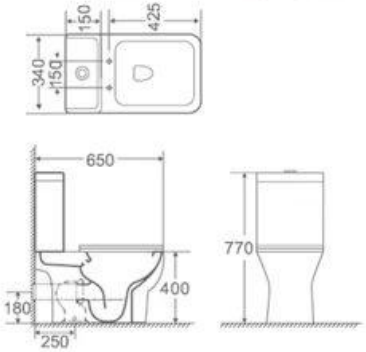

M6006

Washdown Close-couched Closet
Size:650x340x770mm
S-trap,250mm Roughing-in
P-trap,180mm Roughing-in

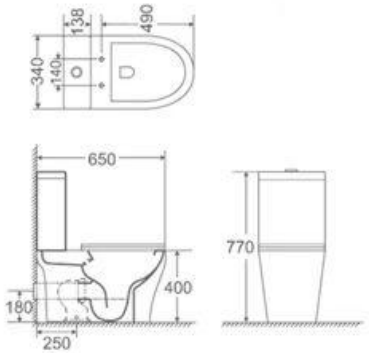

M6011

Washdown flushing
Size:650x390x830mm
P-trap:180mm Roughing-in

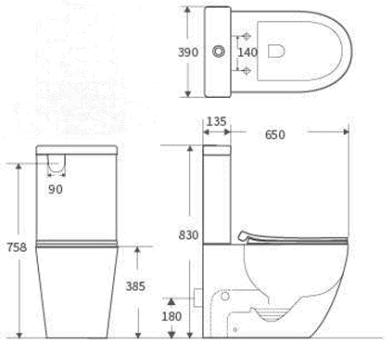

M6013

Washdown flushing
Size:700x390x850mm
P-trap:180mm Roughing-in

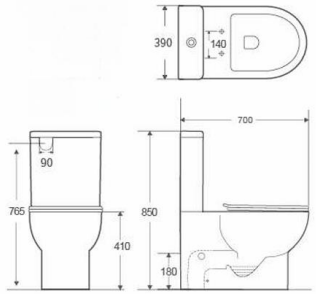

DBR-M607

Washdown flushing
Size:660x380x845mm
P-trap:180mm Roughing-in

M6008

Tornado flushing
Size:700x385x840mm
P-trap:180mm Roughing-in

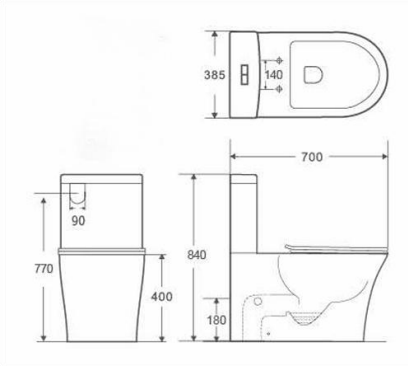

M6009

Washdown flushing
Size:650x380x855mm
P-trap:180mm Roughing-in

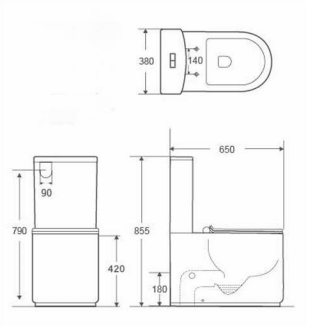

H080

Washdown flushing
Size:625x385x855mm
P-trap:180mm Roughing-in

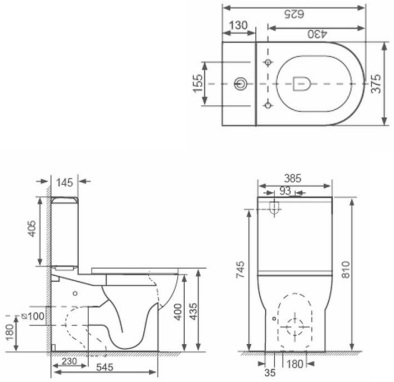

M6022

Tornado flushing
Size:625x380x810mm
P-trap:180mm Roughing-in

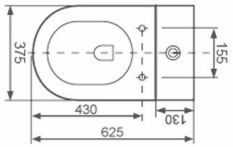

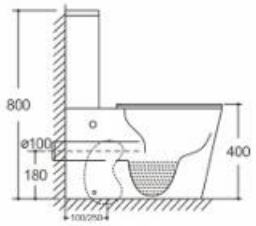

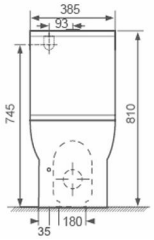

M6023

Tornado flushing
Size:660x360x800mm
P-trap:180mm Roughing-in

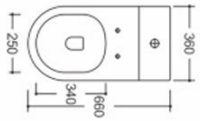

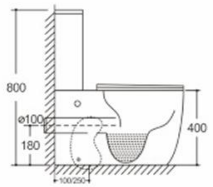

DBR-M909

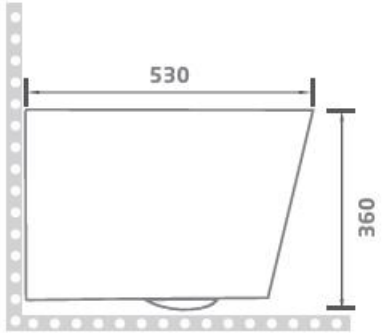

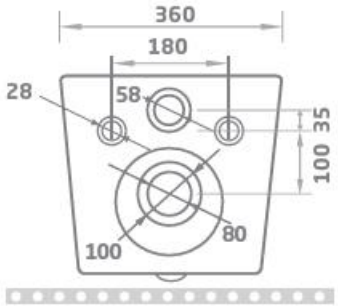

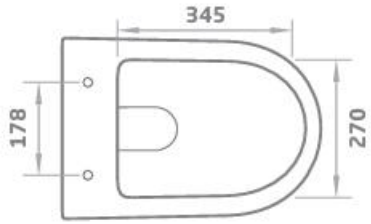

Wall-hung Toilet
Flushing system: Rimless

size: 530 X 360 X 360mm
P-trap:180mm

DBR-M907

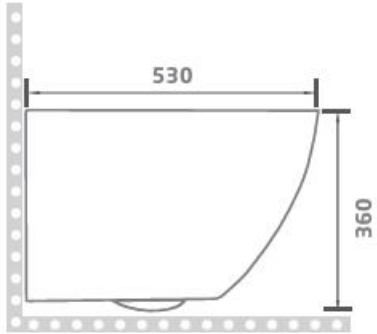

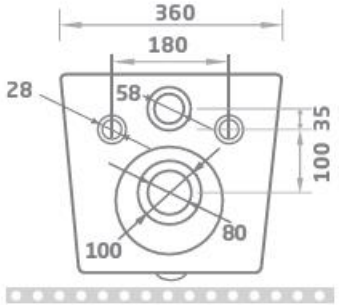

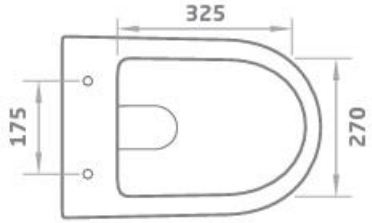

Wall-hung Toilet
Flushing system: Rimless

size: 530 X 360 X 360mm
P-trap:180mm

DBR-M201

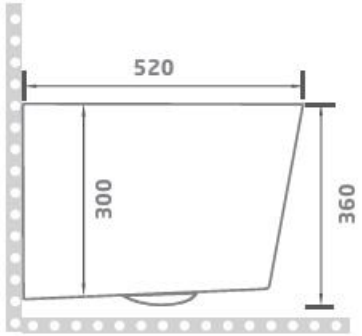

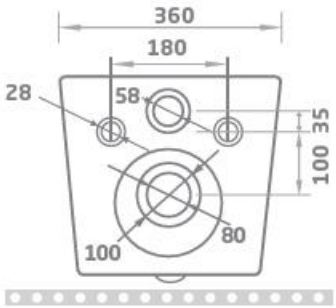

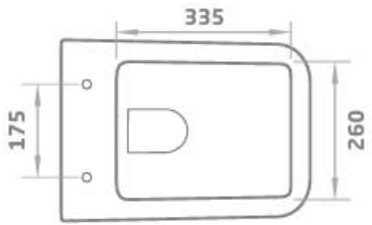

Wall-hung Toilet
Flushing system: Rimless

size: 520 X 360 X 360mm
P-trap:180mm

2302

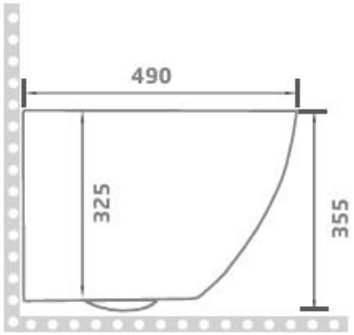

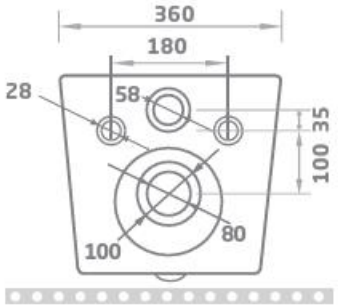

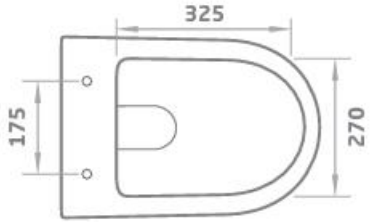

Wall-hung Toilet
Flushing system: Rimless

size: 490 X 360 X 355mm
P-trap:180mm

DBR-F700

Wall-hung Bidet

size: 520 X 360 X 300mm

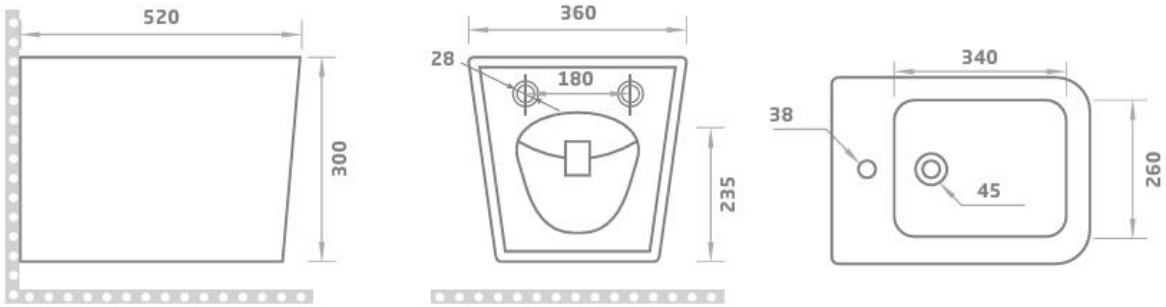

F7002

Wall-hung Bidet

size: 490 X 360 X 325mm

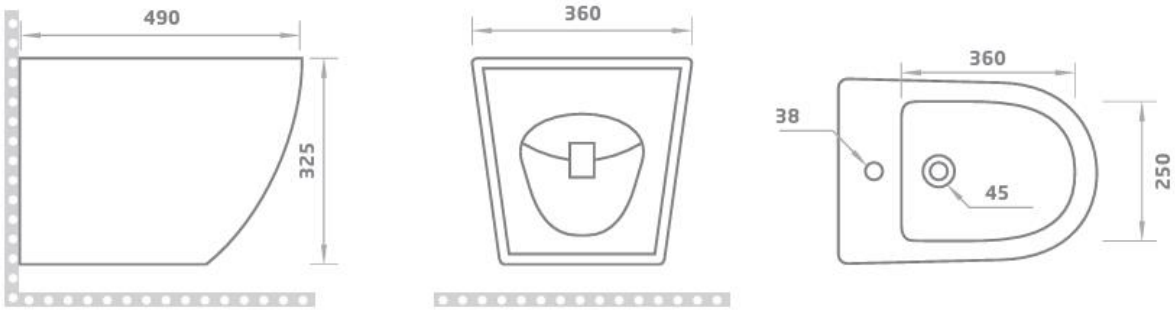

F1007

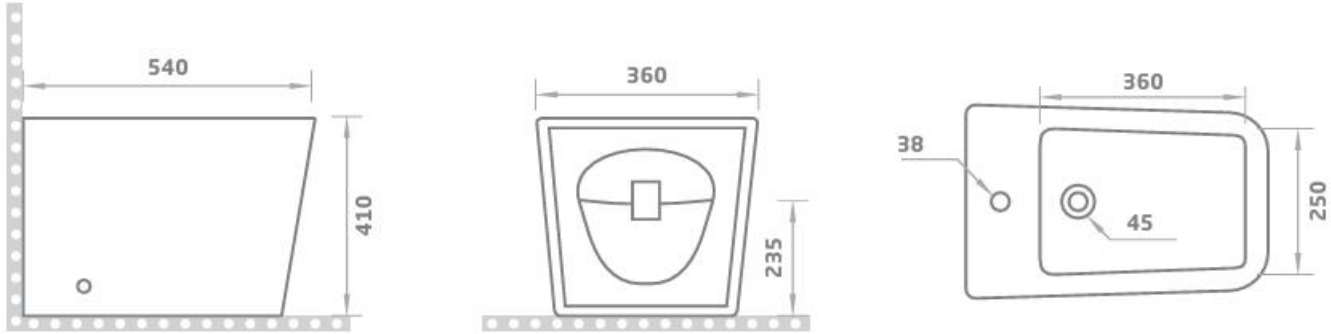

Floor-standing Bidet

size: 540 X 360 X 410mm

F1008

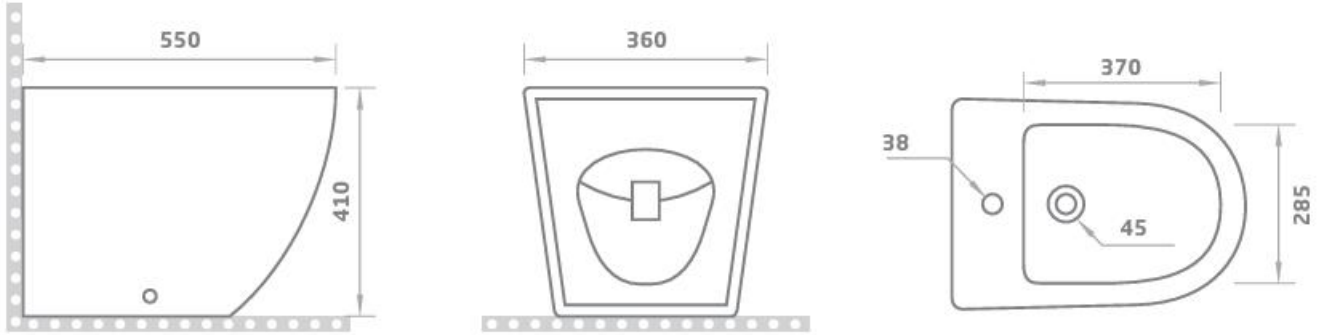

Floor-standing Bidet

size: 550 X 360 X 410mm

F1005

Floor-standing Bidet

Size : 525*340*400mm

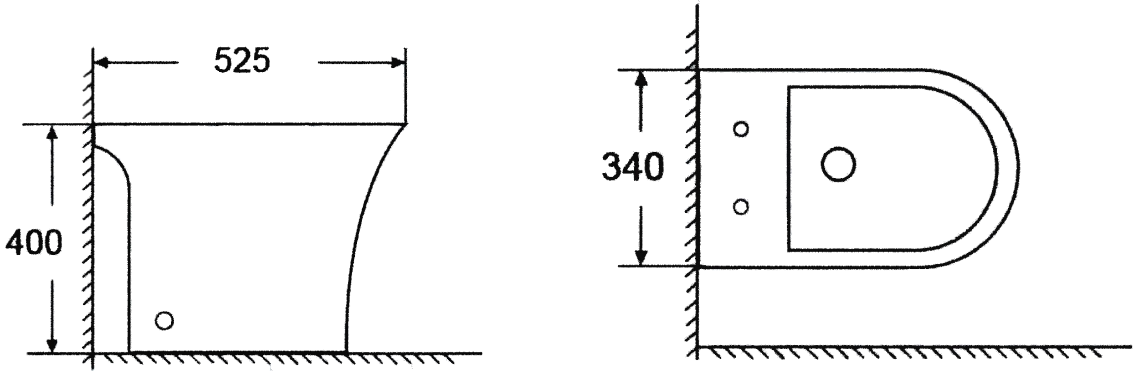

F1006

Floor-standing Bidet

Size : 540*340*400mm

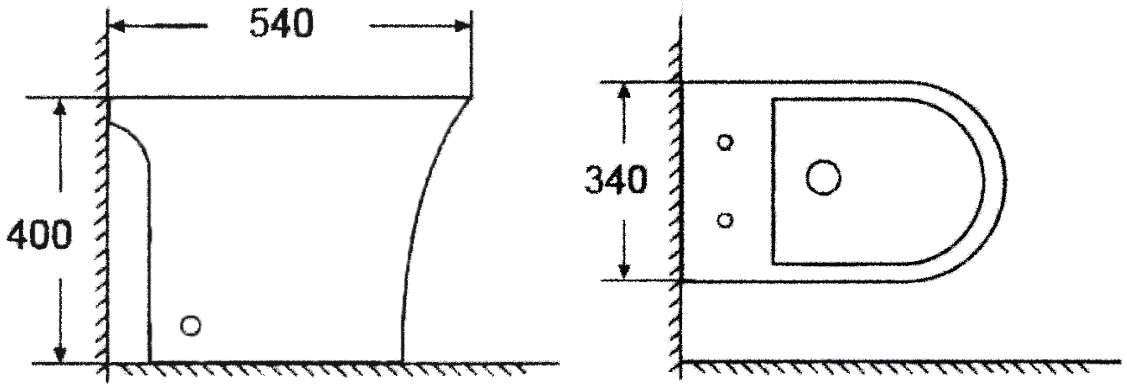

FLOOR STANDING BIDET&CONCEALED TANK

F7005

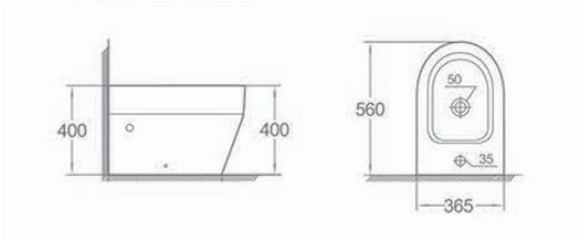

Floor-standing Bidet

Size : 560*365*400mm

DBR-333

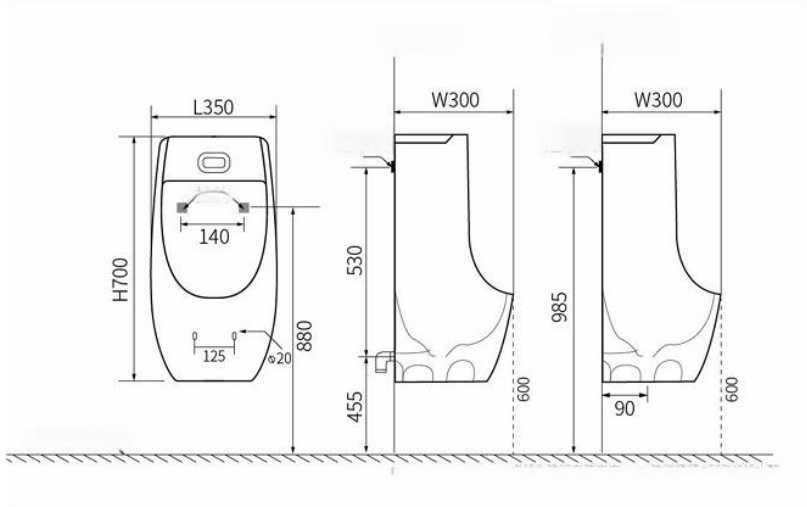

Urinal

350x300x700mm

S002

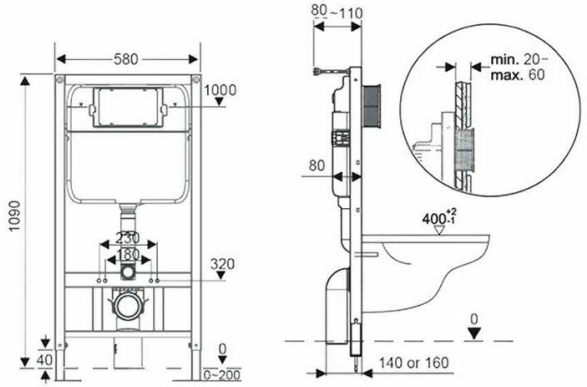

Concealed tank

1090x80x580mm

A002

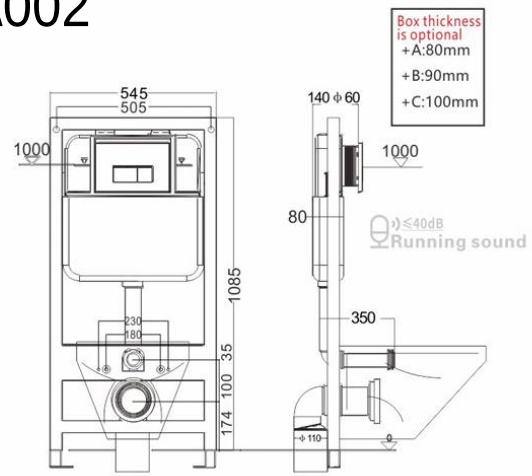

Concealed tank

1085x80x545mm

G1015

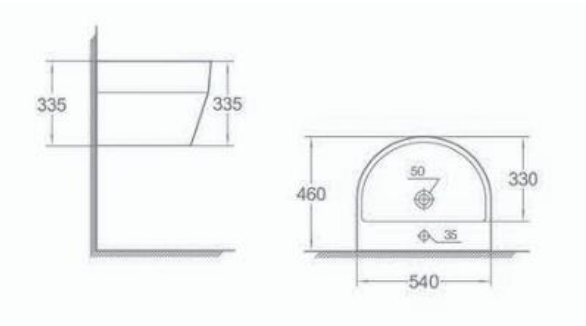

Wall-hung basin
540x460x335mm

BG048

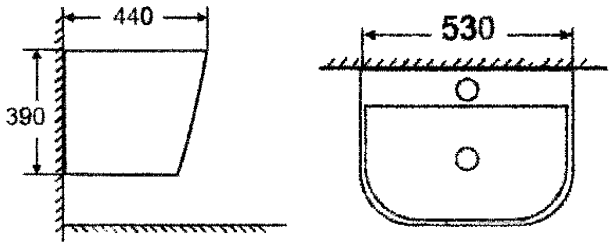

Wall-hung basin
530x440x390mm

G1017

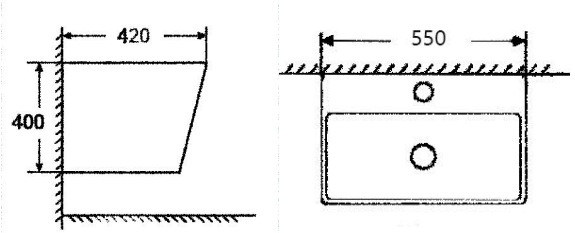

Wall-hung basin
550x420x400mm

BG041

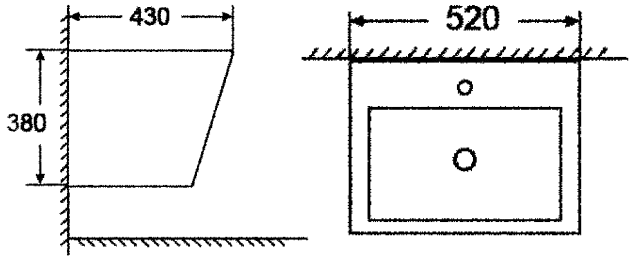

Wall-hung basin
520x430x380mm

DBR-200-120

Thin side basin

1200x500x195mm

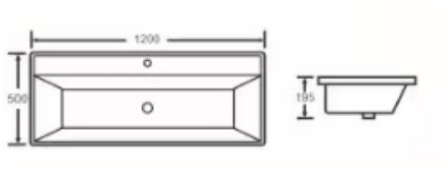

1172-60

Thin side basin

610x390x170mm

P2803-120

Thin side basin

1200x500x195mm

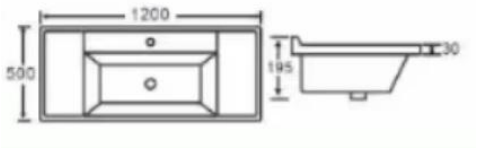

1173-80

Thin side basin

800x500x160mm

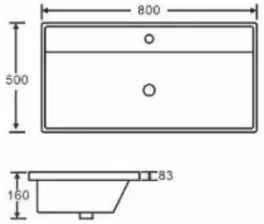

BAISN

K2002

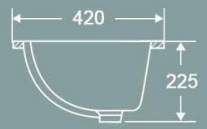

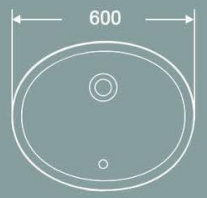

Under Counter Basin
Size : 600x420x225mm
Under Mounted

K1011

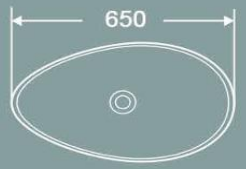

Art Basin
Size : 650x440x165mm
Above counter mounting

K2106

Under Counter Basin
Size : 515x405x170mm
Under Mounted

K1702

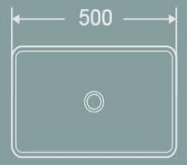

K1702

Art Basin
Size : 500x400x135mm
Above counter mounting

K1009

K1701

P1601

Pedestal basin

615x460x850mm

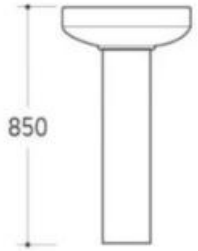

P1602

Pedestal basin

620*460*810mm