AUDIO BOARD — front end: power, U.FL audio in, reconstruction filter + buffers, 1/4in L/R + 3.5mm out

POWER FFC (4-pin from APM): +5V +3V3 GND GND (-5V made on-board)

POWER INPUT
- 4-pin FFC from APM (+5V)
- ICL7660 makes -5V

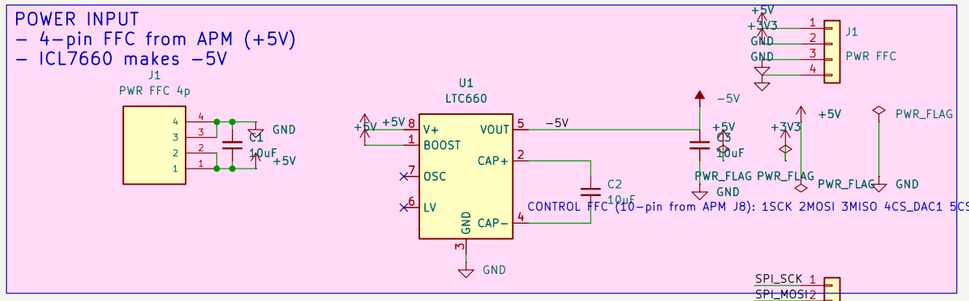

AUDIO INPUT
- U.FL for L and R DACs from APM

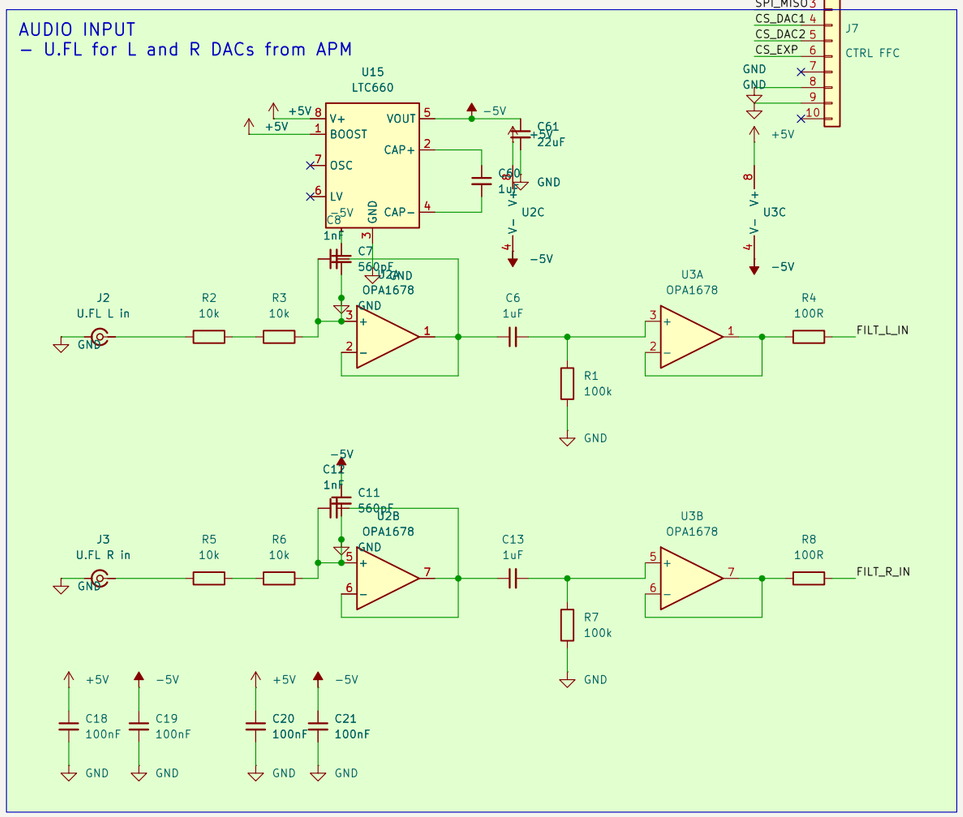

OUTPUTS — 1/4in L/R (ACJS-MHOM) + 3.5mm headphone/debug

ANALOG PATH — each channel's buffer output (FILT_x_IN) goes into the analog sub-sheet; FILT_x_OUT returns to the jacks

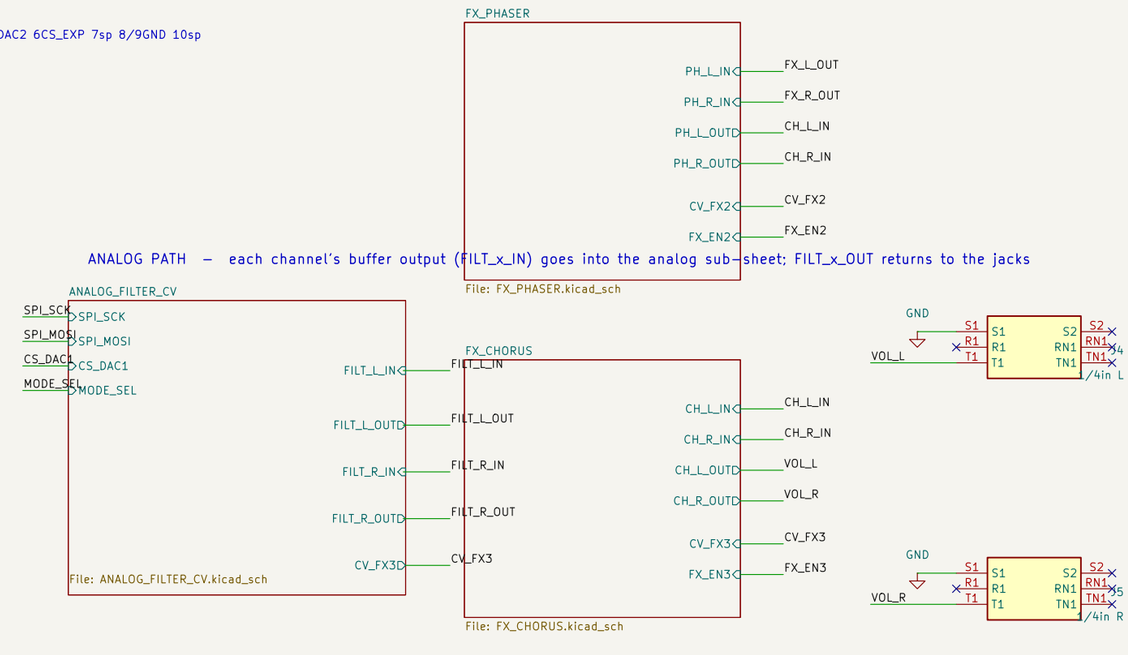

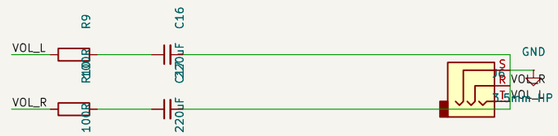

MASTER VOLUME — RV4/RV5 = one dual-gang pot (shared L/R knob); attenuates final output to the jacks/HP

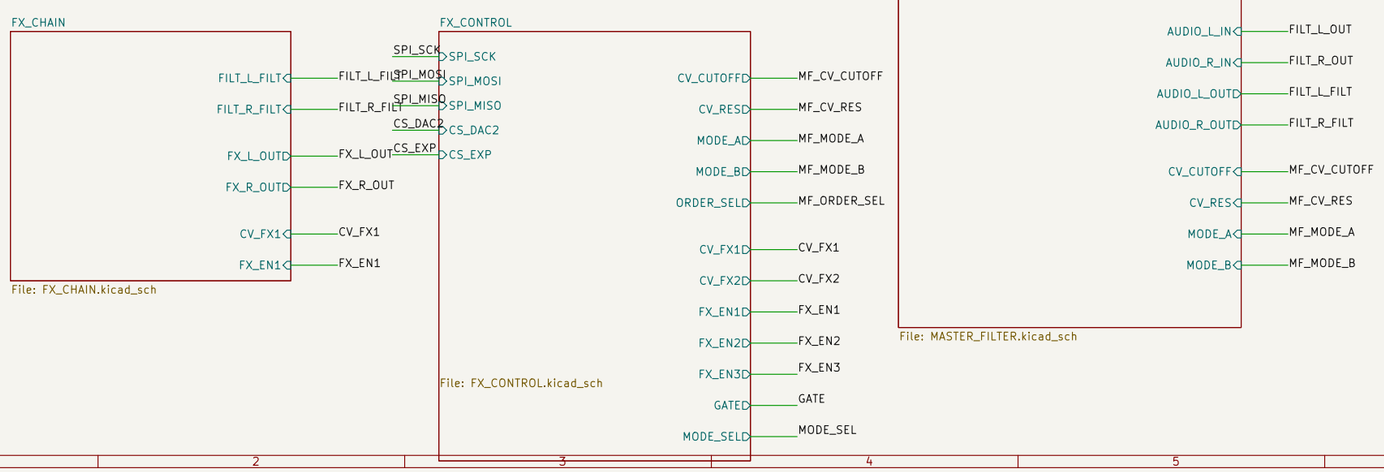

Sheet: /		
File: AUDIO_BOARD.kicad_sch		
Title:		
Size: A3	Date:	Rev:
KiCad E.D.A. 10.0.4		Id: 1/7

FX CHAIN — DRIVE (soft clip) + TREMOLO (OTA VCA, LFO=CV_FX1); each bypassable (FX_EN). In: FILT_x_FILT (from SVF) -> Out: FX_x_OUT (to volume)

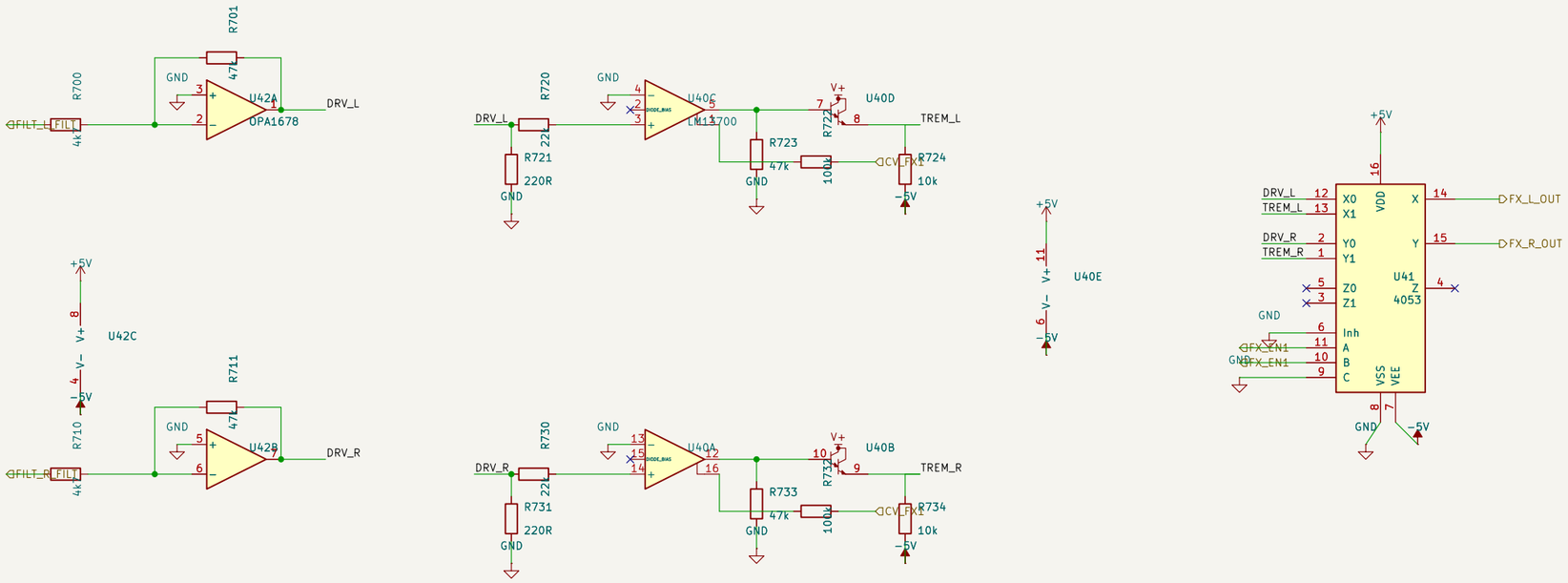

DECOUPLING 100nF/IC

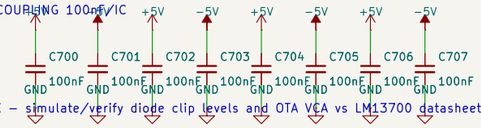

NOTE: analog FX — simulate/verify diode clip levels and OTA VCA vs LM13700 datasheet before fab.

Sheet: /FX_CHAIN/ File: FX_CHAIN.kicad_sch		
Title:		
Size: A3	Date:	**Rev:**
KiCad E.D.A. 10.0.4		Id: 2/7

FX CONTROL – 2nd FX-control FFC (SPI + mode/order/enable) -> DAC8565 #2 makes CV_CUTOFF/CV_RES (+2 spare FX CVs); digital selects pass through

CONTROL/DAC – SPI + CS_DAC2 + CS_EXP from the root's one 10-pin control FFC; this DAC + the MCP expander share that SPI bus.

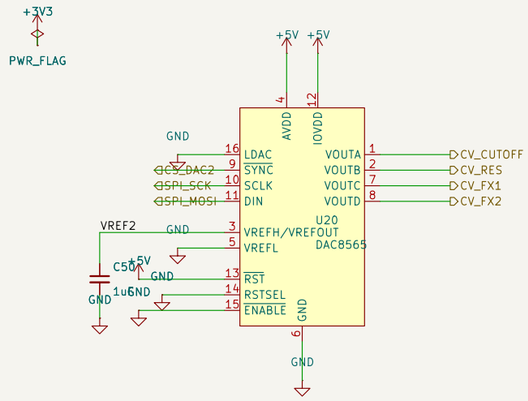

DAC decoupling

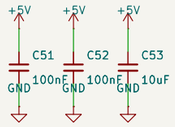

MCP23S17 expander – SPI2 + CS_EXP -> 16 GPIO fan-out for all FX/filter digital selects (frees the FFC from per-line GPIO). Runs at +3V3.

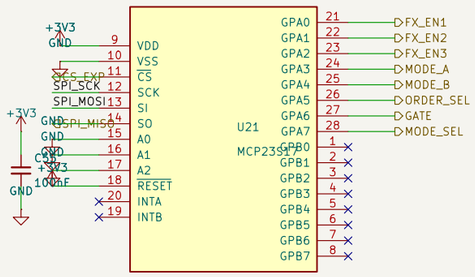

outputs to filter/FX: CV_CUTOFF, CV_RES (-> SVF), CV_FX1/CV_FX2 (-> future phaser/chorus/tremolo); MODE_A/B, ORDER_SEL, FX_EN1/2 digital.

Knobs/switches live on the controller board; STM32 reads them, drives this DAC over SPI and sets the digital lines.

Sheet: /FX_CONTROL/ File: FX_CONTROL.kicad_sch		
Title:		
Size: A3	Date:	**Rev:**
KiCad E.D.A. 10.0.4		Id: 3/7

ANALOG FILTER / CV (stereo) — SPI in (10-pin FFC) -> DAC8565 makes CVs -> per-channel LM13700 VCF/VCA; CD4053 selects analog or FPGA-digital

CONTROL/DAC — one 10-pin control FFC (root) feeds this DAC (CS_DAC1) + the FX DAC + MCP over ONE shared SPI bus; MODE_SEL from the expander

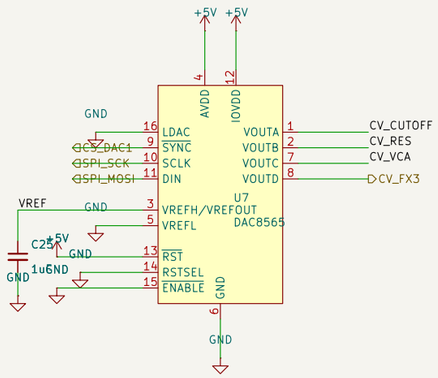

TOGGLE — CD4053: MODE_SEL selects analog (VCA_x_OUT) vs bypass (FILT_x_IN) for BOTH L an

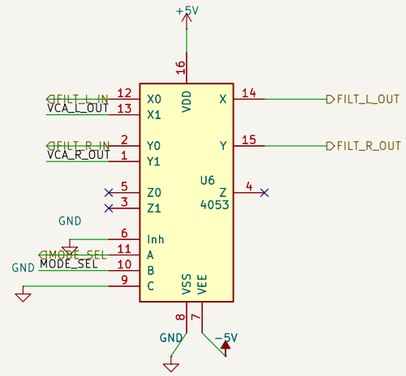

CV SUMMER — DAC CV_CUTOFF + CV_MOD summed by U5 -> VCUTOFF (drives both L and R VCFs); knob lives on the control board

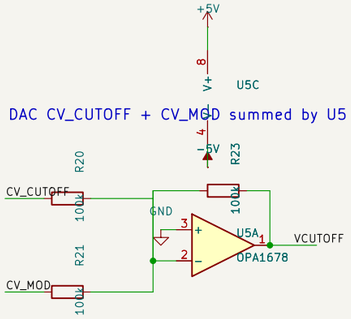

VCF+VCA L — LM13700 OTA lowpass then OTA VCA (NOTE: OTA/Iabc topology — verify vs datasheet)

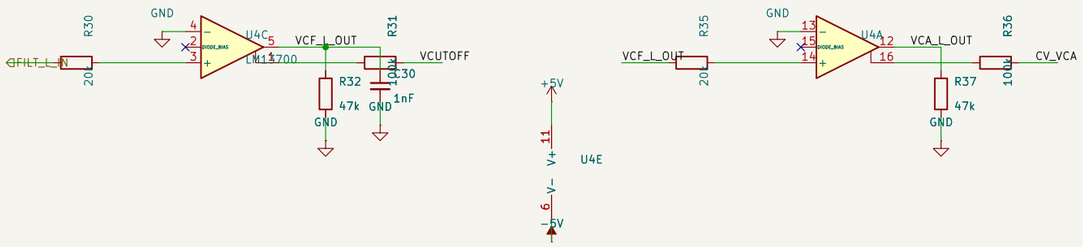

VCF+VCA R — LM13700 OTA lowpass then OTA VCA (NOTE: OTA/Iabc topology — verify vs datasheet)

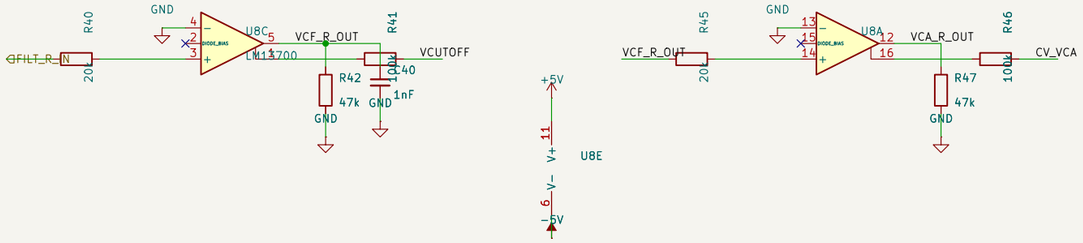

FILT_x_IN / FILT_x_OUT are the hierarchical pins shared with the root (front-end) sheet. Power rails (+5V/-5V/GND) are global.

Sheet: /ANALOG_FILTER_CV/
File: ANALOG_FILTER_CV.kicad_sch

Title:

Size: A3	Date:	Rev:
KiCad E.D.A. 10.0.4		Id: 4/7

MASTER FILTER (stereo) — VC state-variable filter 2-pole: LP/HP/BP/notch; CV cutoff + CV resonance; mode-select mux

CHANNEL L

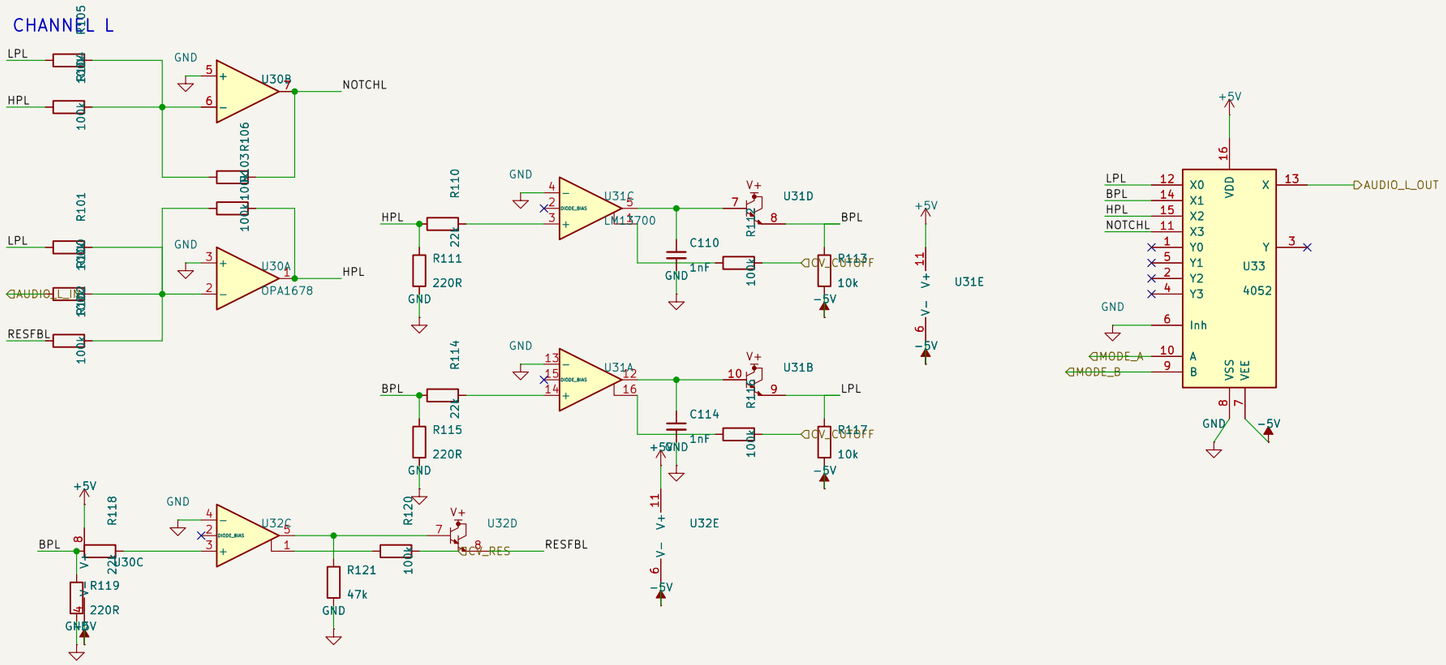

CHANNEL R

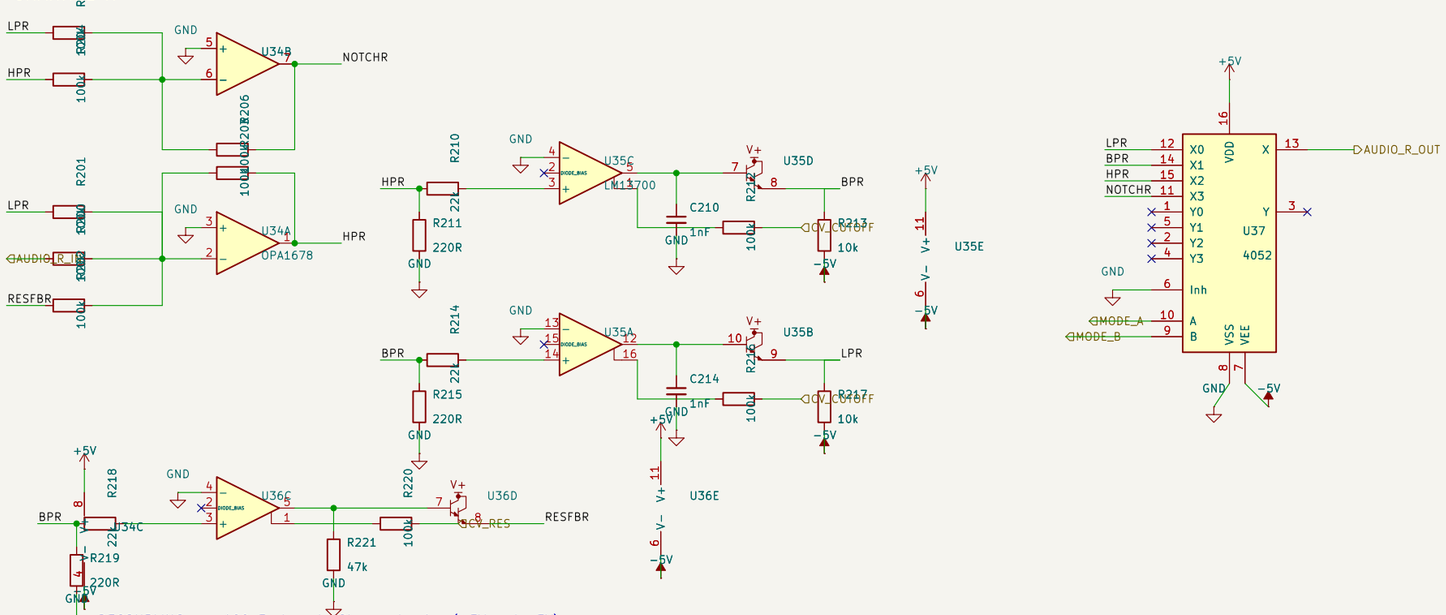

DECOUPLING — 100nF at each IC's supply pins (+5V and -5V)

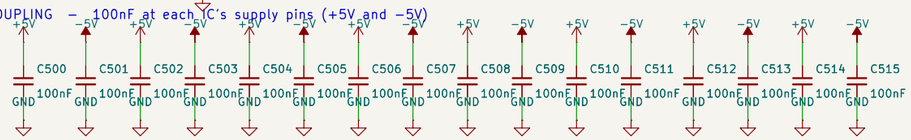

NOTE: OTA VC-SVF + OTA resonance VCA — prototype/verify levels, labc, buffer bias vs LM13700 datasheet before fab. ORDER_SEL reserved for the 2/4-pole cascade.

Sheet: /MASTER_FILTER/		
File: MASTER_FILTER.kicad_sch		
Title:		
Size: A3	Date:	**Rev:**
KiCad E.D.A. 10.0.4		Id: 5/7

FX PHASER (true stereo) — 4 OTA all-pass stages/channel swept by CV_FX2 (STM32 LFO); feedback for notch depth; dry+wet mix; bypass via CD4053 on FX_EN2.

all-pass stage = OTA-C lowpass (Vlp) + diff amp (2*Vlp − Vin). NOTE: connectivity + topology verified; LEVELS/OTA-bias need real-LM13700-model sim before fab.

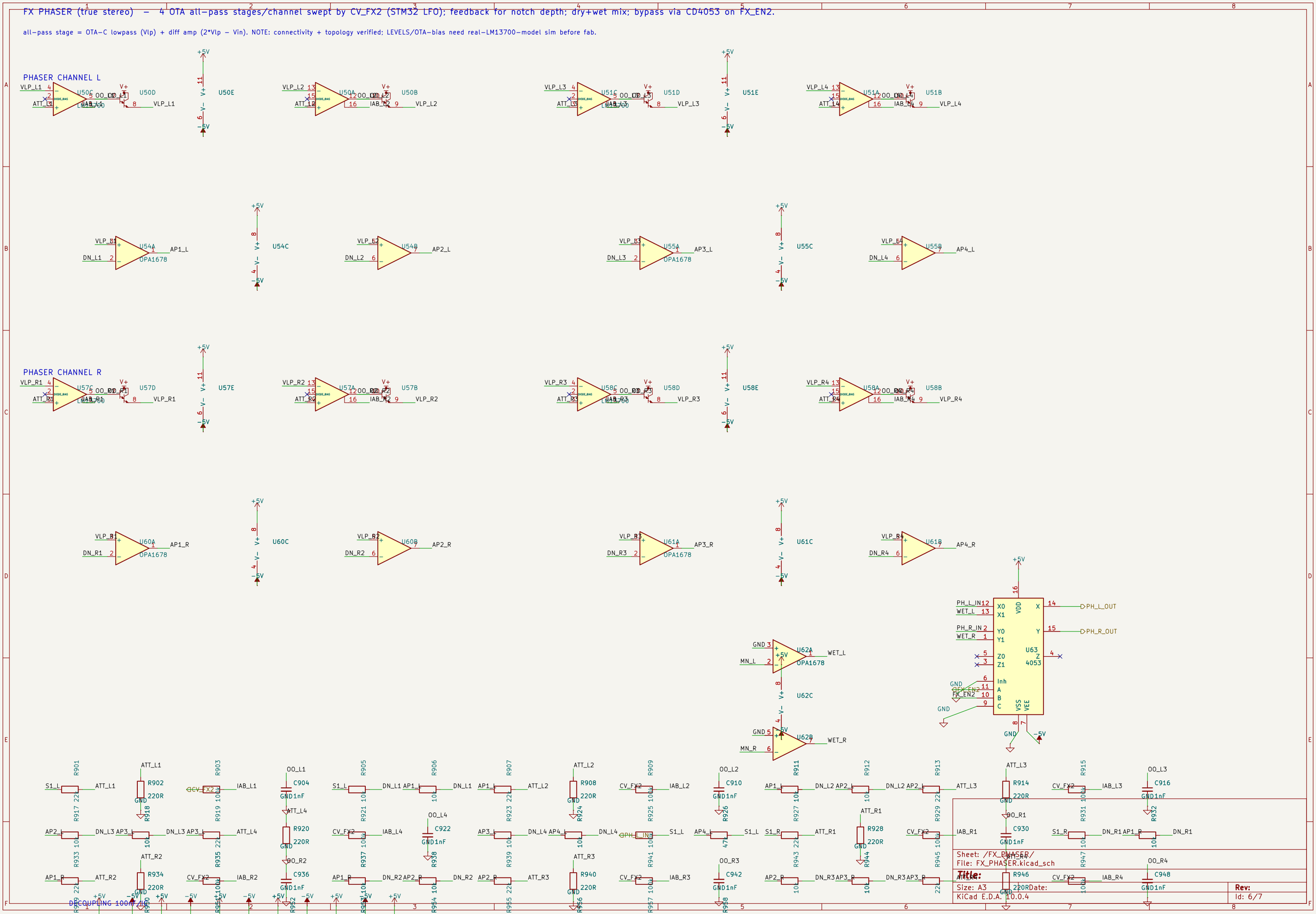

FX CHORUS (true stereo) — BBD (MN3207) delay per channel, MN3101 2-phase clock swept by CV_FX3 (vibrato); wet/dry mix; bypass CD4053 on FX_EN3.

Anti-alias LPF in, reconstruction LPF out. NOTE: NO NE570 compander (not in KiCad libs) — add later for lower BBD noise. VDD=+5V (verify BBD headroom/bias + clock rate vs datasheet + real-model sim before fab).

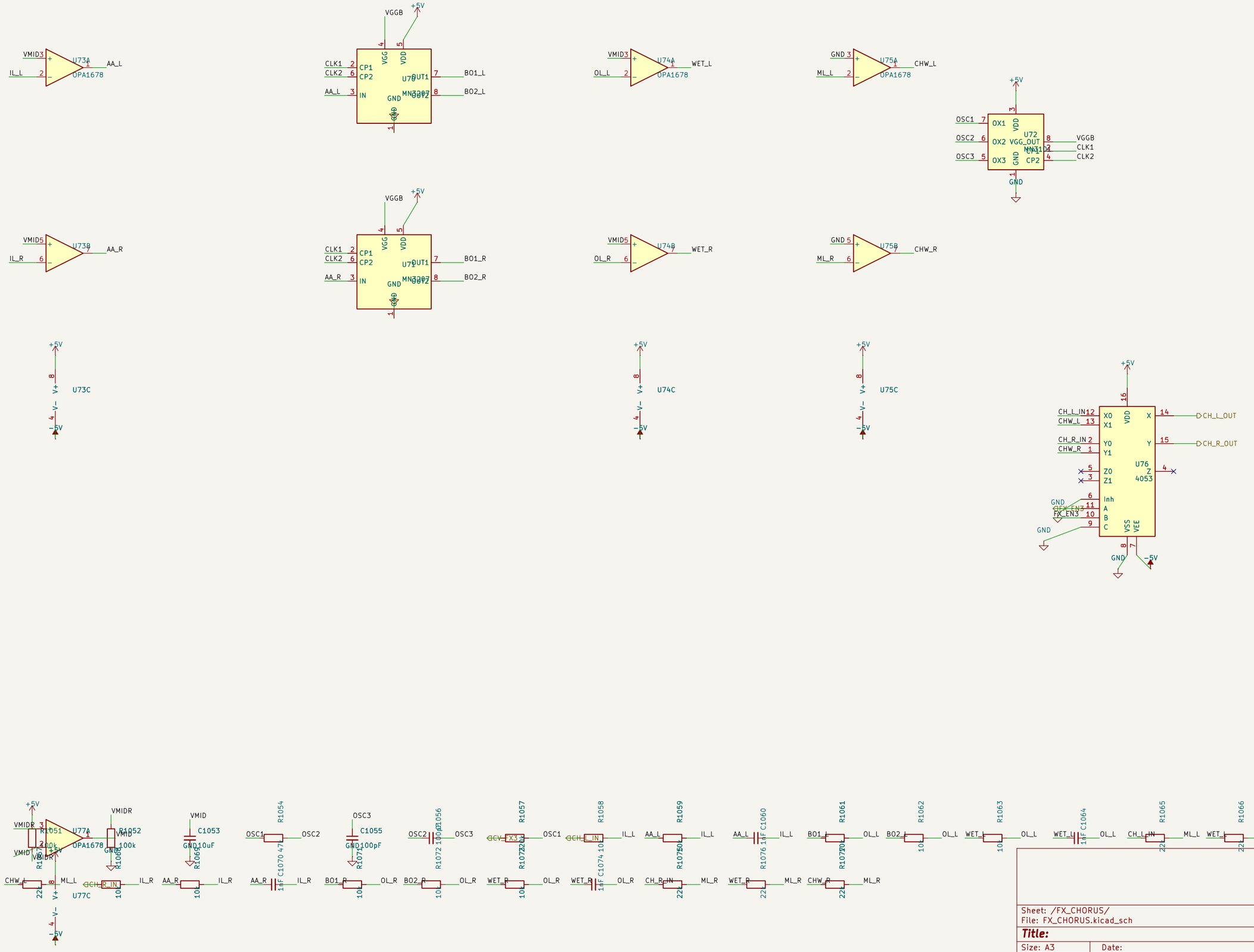

Sheet: /FX_CHORUS/
File: FX_CHORUS.kicad_sch

Title:

Size: A3	Date:	Rev:
KiCad E.D.A. 10.0.4		Id: 7/7