COLLEGE OF ENGINEERING

TECHNICAL DRAWING

ME 159
CREDIT 3

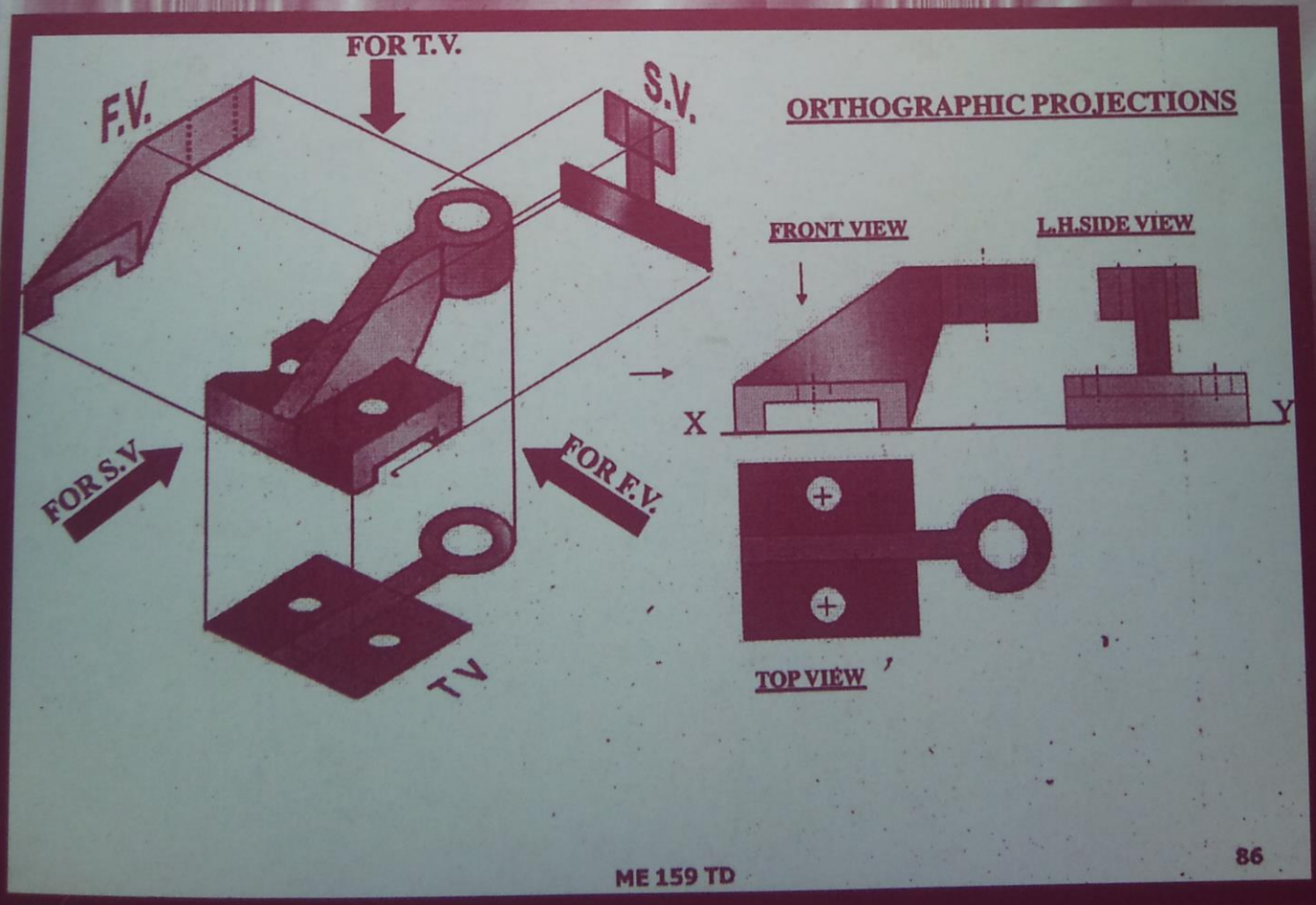

KWAME NKRUMAH UNIVERSITY OF SCIENCE AND TECHNOLOGY, KUMASI

ME 159: TECHNICAL DRAWING

[CREDIT: 2]

A. K. SUNN

ASSESSMENT

The course will be assessed based on the following

- ☐ Assignments (weekly)
- ☐ Mid Semester Examination
- ☐ End of Semester Examination

COURSE SCHEDULE

SCHEDULE				
Week	Date	Subject category	What to cover	Remarks
		Introduction	Introduction to drawing instruments and material	Assignment on student's ability to draw objects as view
		Geometric construction and tangency	Introduction	
			Lines, angles circle, polygons, etc	
			Tangency problems	
			Constructions of loci	
		Sketching	Freehand sketching of lines, curves and simple object	
		Projection	Introduction to projection	Mid-semester Exam
		Orthographic Projection	Axonometric	
			Introduction to auxiliary plane/view	
		Isometric	Production isometric drawing from given orthographic drawing	

COURSE INTRODUCTION

Technical Drawing I covers Geometrical construction; Orthographic projection and other projections; Descriptive geometry, intercessions and development.

This text attempts to indicate the importance of Technical Drawing (or what is also termed engineering Graphics)

Communication Systems, according to Edward Hill, drawing acts as a reflecting of the visual mind on its surface we can probe, test, and develop the workings of our peculiar vision.

Drawing is basically a form of information communication system.

A number of different systems have been developed to facilitate the communication of both technical and non-technical information:

i. Spoken Language is highly refined communication system that humans use to express thoughts, emotions, information, and other needs.
ii. Writing Language is based on the use of formal system of symbols beginning from in the form of pictures (Egyptians), then onto sophisticated and versatile alphabets. Spoken and written forms had their weakness.
iii. Mathematics (chemistry) is an abstract, symbol-based communications system built on formal human logic.
iv. Graphics is a visual communications language incorporating text, symbols, images, and numeric information. It includes everything from the traditional types of engineering drawings to sophisticated computer models, and all follow the rules or laws of visual science.

The selection of an information communication system is based on the appropriateness of that system for the type of information. For example, one cannot use mathematics to express human emotion. Instead, one would use verbally based communications system.

Solving technical problems of engineering the visual language of engineering graphics is the most efficient, because it allows one to go beyond the limitation of other communications forms (for technical information).

Engineering graphics is a real and complete language used in the design process for;

a. Communication
b. Solving problems
c. Quickly and accurately visualizing objects, and
d. Conducting analyses

It may seem to be a very simple task to pick up a pencil and start drawing three-dimensional images on two-dimensional paper. However, this information (technical product) must be presented:

i. With sufficient precision
ii. To ease mass-production of the product, and
iii. To facilitate the ease of interchanging parts

This requires special:

- Knowledge
- Skill to present such complex technical ideas

Important Areas of Engineering Graphics (Technical Drawing)

All types of graphics are under the general heading of VISUAL SCIENCE, which is the study of the visual and technical applications of graphics. There are two major areas within visual science: (see chart below)

i. Visualization is the process of mentally understanding visual information and

ii. Geometry is a branch of mathematics that deal with the properties relationships, and measurements of point, lines, angles, planes, and solids.

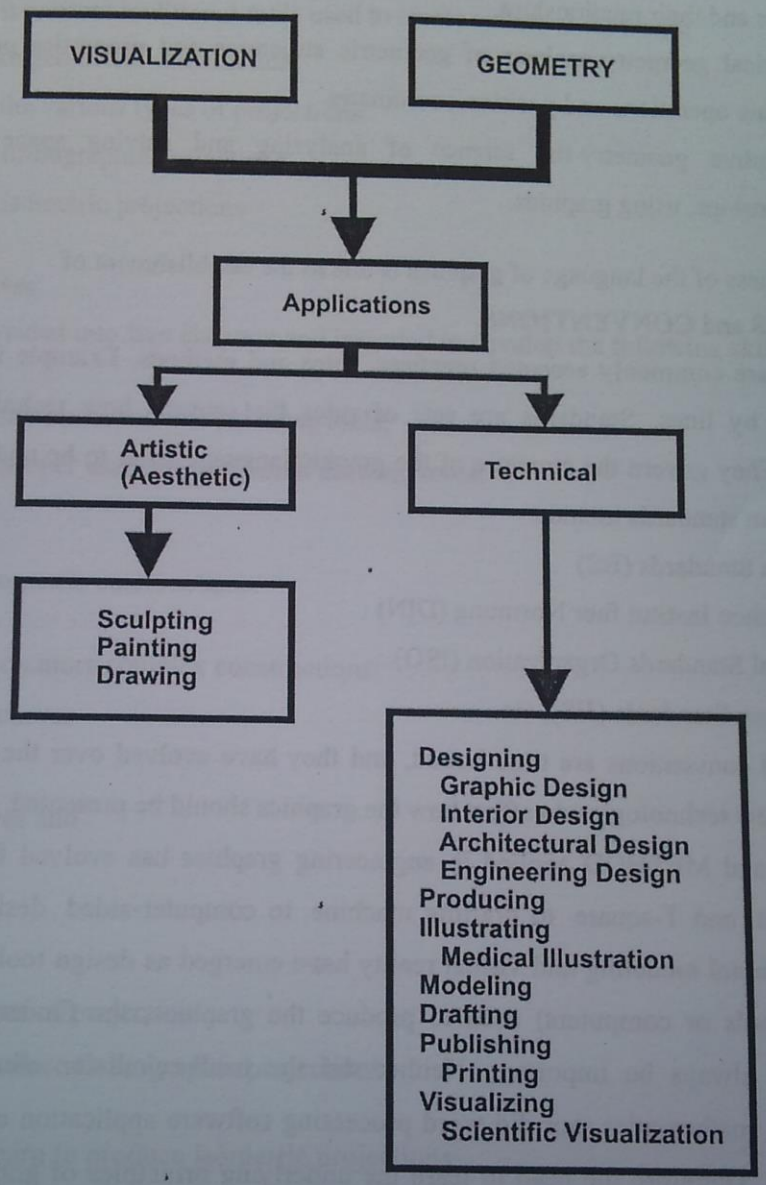

Geometry is the foundation for technical graphics, just as grammar is for language. Geometry includes:

1. Plane geometry-the geometry of planar figures such as circles and triangles and their relationships.

2. Solid geometry-the geometry of three-dimensional objects such as cylinders; cubes and spheres and their relationships.
3. Analytical geometry-analysis of geometric structures and properties principally using algebraic operations and position coordinates.
4. Descriptive geometry-the science of analyzing and solving space distances and relationships, using graphics.

The effectiveness of the language of graphics is due to the establishment of **STANDARDS** and **CONVENTIONS.**

Conventions are commonly accepted practices, rules and methods. Example is presentation of hidden edges by lines. Standards are sets of rules that govern how technical drawings are represented. They govern the structure of the graphic language so as to be understood. Some of the well-known standards include:

i. British Standards (BS)
ii. Deutschen Institut fuer Normung (DIN)
iii. Internal Standards Organization (ISO)
iv. Japanese Standards (JIS), etc.

Standards and conventions are time bound, and they have evolved over the years and are still changing as new technologies do affect how the graphics should be presented.

The TOOLS and METHOD applied in engineering graphics has evolved from the traditional drawing board and T-square to drafting machine to computer-aided design/drafting (CAD). Three-dimensional modeling and virtual reality have emerged as design tool. Irrespective of the tools (head tools or computers) used to produce the graphics, the fundamental principles of graphics will always be important. Neither did the hand-calculator eliminate the need for understanding mathematics, nor did word processing software application eliminate the need to learn to write. Therefore the need to learn the underlying principles of graphics will always be necessary.

Course Goals

i. Define standards and conventions as applied to technical drawing
ii. Identify important traditional tools used to create technical drawings,
iii. Undertake geometric construction,
iv. Identify the various types of projections
v. Produce orthographic projections
vi. Produce isometric projections

Course Objectives

This course is divided into five chapters and intended to develop the following skills. Chapte to:

- Identify traditional technical drawing tools,
- Learn the proper usage of traditional drawing tools.

Chapter 2 is on

- Simple geometric constructions.

Chapter 3 focuses on more complex constructions:

- Cycloidal curves
- Involute
- Spiral curves and
- Involute

Chapter 4 is to:

- Identify types of projection
- Learn to produce Orthographic projections

In Chapter 5 we learn to produce Isometric projections

Contents

COURSE INTRODUCTION iii

1 TOOLS AND TECHNIQUES 1

1.1 INTRODUCTION 1

1.2 TRADITIONAL TOOLS AND LINE DRAWING INSTRUMENTS 1

1.2.1 TRADITIONAL TECHNICAL DRAWING TOOLS 1

1.3 TECHNIQUE OF LAYING OUT A DRAWING PAPER 5

1.4 LINE DRAWING TECHNIQUES 7

2.0 GEOMETRIC CONSTRUCTIONS 15

2.1 LINES 15

2.2 ANGLES 19

2.3 CIRCLES AND ARCS 22

2.4 POLYGONS 25

2.5 ELLIPSE 28

2.6 TANGENCY 30

3 LOCI OF POINTS, PLANES AND CURVES 37

3.1 LOCI OF POINTS 37

3.2 PLANE AND SPACE CURVES 38

3.3 CYCLOIDAL CURVES 39

3.3.1 CYCLOID 39

3.3.2 EPICYCLOIDS 42

2.3.3 HYPOCYCLOID 43

3.4 INVOLUTE, SPIRAL AND HELIX 44

3.4.1 INVOLUTE 44

3.4.2 SPIRAL 45

3.4.3 HELIX (CYLINDRICAL HELIX) 47

4 PROJECTION AND VIEWS 48

4.1 PROJECTION 48

4.1.1 PROJECTION 48

4.1.2 TYPES OF PROJECTION 48

4.1.3 ORTHOGRAPHIC PROJECTIONS 51

4.1.4 PLANES OF PROJECTION 52

4.1.5 OBJECT 52

4.2 TYPES OF ORTHOGRAPHIC PROJECTION 53

4.2.1 ORTHOGRAPHIC PROJECTION OF AN OBJECT 57

4.2.3 VISUALIZATION 64

5 AXONOMETRIC PROJECTION.....74
5.1 ISOMETRIC PROJECTION.....74
5.1.1 ISOMETRIC PROJECTION.....74
5.1.2 POSITIONING OF AN OBJECT DURING ISOMETRIC PROJECTION.....74
5.1.3 ISOMETRIC LENGTH.....75
5.1.4 ISOMETRIC SCALE.....76
5.1.5 ISOMETRIC SHEET (GRAPH).....76
5.2 THEORY OF ISOMETRIC PROJECTION.....77
5.2.1 THEORY OF ISOMETRIC PROJECTION.....77

1 TOOLS AND TECHNIQUES

1.1 INTRODUCTION

Just as graphic language has evolved over the years into sophisticated set of standards and conventions, so have the tools used to graphically communicate technical ideas. Tools are used to produce three basic types of drawings:

- Freehand sketches,
- Instrument drawings, and
- Computer drawings and models.

The tools have evolved from pencils, triangles, scales and compasses to computer-aided design/ drafting (CAD) systems. Traditional tools are devices used to assist the human hand in making technical drawings. The assistance includes drawing lines straighter, making circles more circular and increasing the speed and ease with which drawings are made.

1.2 TRADITIONAL TOOLS AND LINE DRAWING INSTRUMENTS

1.2.1 TRADITIONAL TECHNICAL DRAWING TOOLS

Traditional tools may consist of the following.

I. PENCILS

There are two types of pencils:

1. Clutch pencils and
2. Wooden pencils

Clutch or mechanical pencils: In technical Drawing there are two types of lines based on their thickness [thick lines 90.7mm) and thin lines (0.35mm)]. Therefore, there is the need to have two clutch pencils to take care of these lines 0.7mm and 0.35mm clutch pencils.

Wooden pencils: The two shapes of the lead of a pencil in order to achieve good and accurate work are:

Conical: - for drawing and printing

Chisel edge: - Drawing lines alone.

For a wooden pencil, there is the need to sharpen the pencil to meet the required thickness of the line in question.

The accuracy and appearance of drawing depend upon the quality of pencil used. Pencils are of various grades easily recognized by the letters marked on them. Recommended leads are listed below:

Moderately hard Drawing	H- for
Medium Sketching	HB- for

II. SCALE RULE

Scale rules are used for measurement. The smallest division on the scale rule should be the mm. All drawings will be in mm.

III. DRAWING PAPER

White in colour and should not discolour or go brittle with time. Thickness: 125gm/m^2

Size: Sizes of drawing sheets are according to standards. For the purpose of Engineering Drawing and Technical Drawing, Ghana has adopted the ISO-A series Format.

ISO-A series (mm)		Drawing Field
A0	84x1189	8331x1179
A1	59x841	584x831
A2	420x594	410x584
A3	297x420	287x410
A4	210x297	200x287

ISO-B series (mm)	
B0	1000x1414
B1	707x1000
B2	500x707
B3	353x500
B4	250x353

It is important to note that drawing sheet of size 420 x 594 i.e. A2 size also known as imperial sheet is generally

IV. DRAWING BOARD

The drawing board is a rectangular piece of wooden board with one edge as the working edge.

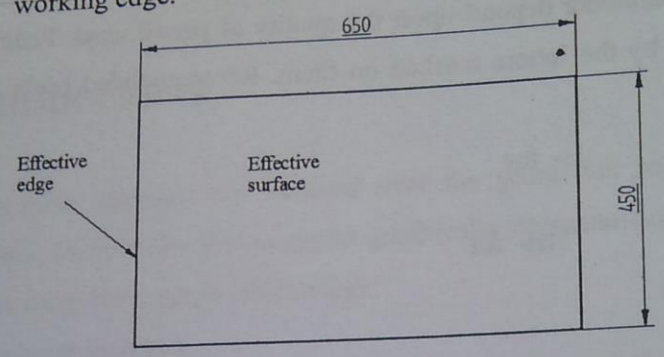

The selection a good board for engineering drawing will be based upon:

a. Size: The size of a drawing board will depend on the size of the drawing paper. The board should easily contain the paper, but at the same time it should not take up useful space of table. For engineering students, a size of 450 x 650 is recommended.

b. Effective edge: This edge must be straight and smooth

c. Effective surface: The surface must be smooth.

V. TEE-SQUARE

It has two useful edges namely the herd or stock or and the blade.

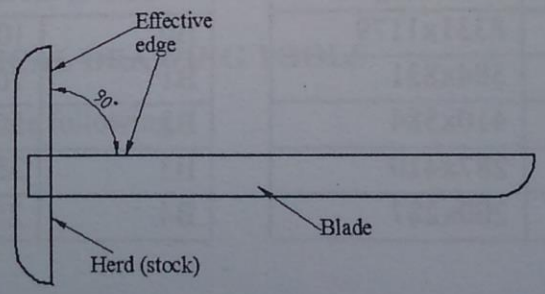

VI. PROTRACTOR

Protractors are used for measuring angles that cannot be obtained with the set-squares.

VII. SET SQUARES

There are two types of set squares:

Thirty-sixty degree (30-60) and Forty-five degree (45)

VIII. PAIR OF COMPASSES

V- Shaped instrument with two legs joined by a hinge, used for drawing circles, picking distances etc. hold with dumb and forefinger. Always exert less pressure to avoid holes in your drawing sheets.

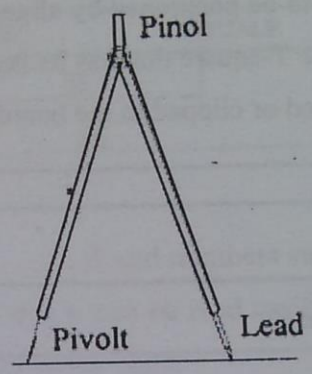

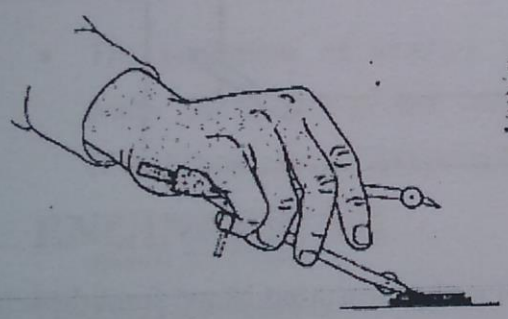

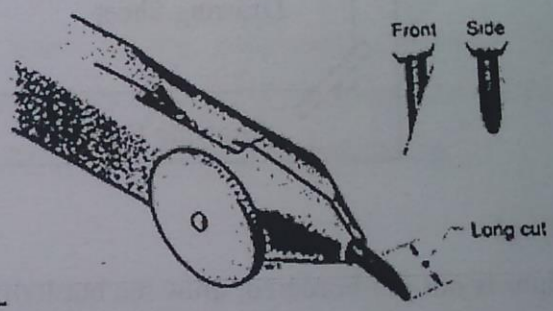

IX. PAIR OF DIVIDERS

A divider is similar to a pair of compass except that it has needle-points in both ends. It used to transfer measurements on a drawing, or divide a line into equal parts by trial and error.

X. TEMPLATES

Templates are devices used to assist in the drawing of repetitive features, such as circles, ellipse, threaded fasteners, and architectural symbols. The circle template is used to draw circles, arcs, and fillets and rounds, and it is quicker than using a compass. The circle template has perpendicular centre line marks that are used to align the template to the perpendicular centre line of the drawing.

1.3 TECHNIQUE OF LAYING OUT A DRAWING PAPER

i. The drawing paper is to be positioned by aligning the long top edge of the paper with the straight edge of the T-square that has its herd aligned with the drawing board. The paper is then cello taped or clipped to the board.

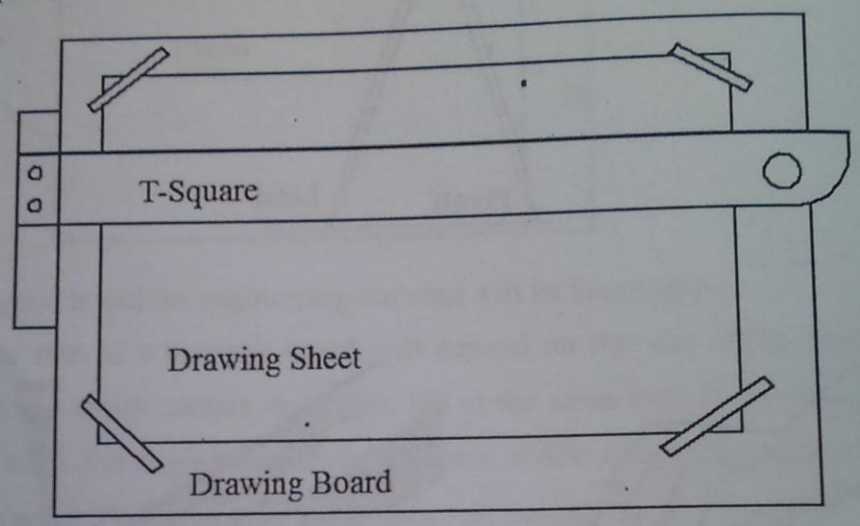

Board lines

If the paper is not pre-bordered, draw the borderlines by measuring 20mm from the left edge and 10mm from right, bottom and top edges of the drawing paper. Draw vertical lines as the left and right hand border lines, and horizontal lines as the lower and upper border-lines.

Title Block

The title block is an important feature in drawing because it gives all the information of the prepared drawing. It is located at the right hand bottom corner of the drawing paper. See the figure above. There are several standard title blocks (e.g. ISO, DIN etc. title blocks) as well as company-specific title blocks. All title blocks must contain at least the following information:

- Title of drawing
- Name of firm
- Names and dates of the drafters, checker, designer,
- Scale

The details of the title block for drawings within ME 159 are shown below:

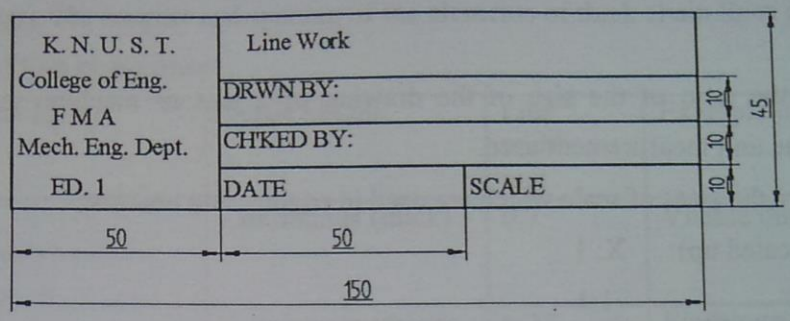

Text (Lettering)

The art of writing the alphabets A, B,……., Z and numbers such as 1, 2, 3,…….0, etc. is known as lettering. It must be neat legible so that it can be read easily both on the original drawing and on a reproduction, such as a blueprint or photo copy.

Requirement of good lettering:

- The proportion of lettering refers to the relationship between the height width and spacing of each letter. There is not fixed standards for the proportions of each letter, but the following proportion of lettering are known:

i. **ENGINEERING**
NORMAL LETTERING

ii. **ENGINEERING**
CONDENSED LETTERING

iii. **ENGINEERING**
EXTENDED LETTERING

- The composition (format) of letter into words and words into sentences must be equal to the eye judgement. Upper, lower or mixed cases.
- The spacing of letters is the distance left between two adjacent letters:

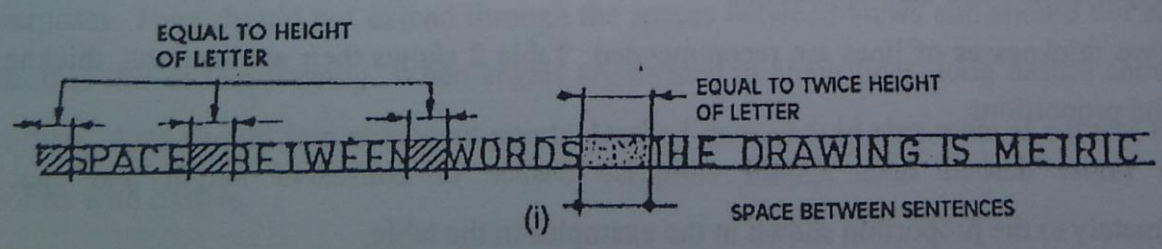

Scale

Scale indicates the ratio of the size of the drawing of a part or machine to its actual size irrespective of the unit measurement used.

The following are the sizes of scale which are used in engineering practice:

Magnification (scaled up)	X: 1
Natural	1:1
Reduction (scaled down)	1: X

Where X is an integer

Example: 1: X

Will be interpreted as 1 unit of the drawing represent x units of the actual piece.

1.4 LINE DRAWING TECHNIQUES

Line Convention

- Point:- A point occupies space and has no width, length or breath.
- Line:- A line is the trace of a point moving in space – not necessarily a straight line
- A straight line signifies the shortest distance between two points.

Types of Lines

Types of line and their application is extracted from BS 308 part 1:1972 page 9 and 10. This is reproduced below:

BS 308: Part 1:1972

- Types of line and their application
- Two thicknesses of lines are recommended: Table 2 shows their applications, thickness and proportions.

Dashed lines: dashed lines should comprise dashes of consistent length and spacing approximately to the proportion shown in the examples in the table.

Thin chain lines: thin chain lines should comprise long dashes alternating with short dashes. The proportions should be generally as shown in the table but the lengths and spacing may be increased for very long time

Thick Chain Lines: The lengths and spacing of the elements of thick chain lines should be similar to those of thin chain lines.

Example (letters to fig. 6)	Types of One	Line width, mm	Example of Application
A	Continuous (thick)	0.7	Visible outlines and edges
B	Continuous (thick)	0.35	Fictitious outlines and edges Hatching Outlines of adjacent parts Outlines of revolved sections
C	Continuous irregular (thin)	0.35	Limits of partial views or section, when the line is not an axis.
D	Short dashes (thin)	0.35	Hidden outlines and edges
E	Chain (thin)	0.35	Centre lines Extreme position & of moveable parts
F	Chain (thick) at ends and at changes of direction. It is thin elsewhere	0.7 0.35	Cutting planes
G	Chain (thick)	0.7	Indication of surfaces which have to meet special requirements.

General: All chain lines should start and finish with a long dash and when thin chain lines are used as centre lines they should cross one another at solid portions of the line. Centre lines should extend only a short distance beyond the feature unless required for dimensioning or other purposes. They should not extend through the spaces between views and should not terminate at another line or the drawing. When angles are formed in chain lines, long dashes should meet at corners. Arcs should join at tangent points. Dashed lines should also meet at corners and tangent points with dashes.

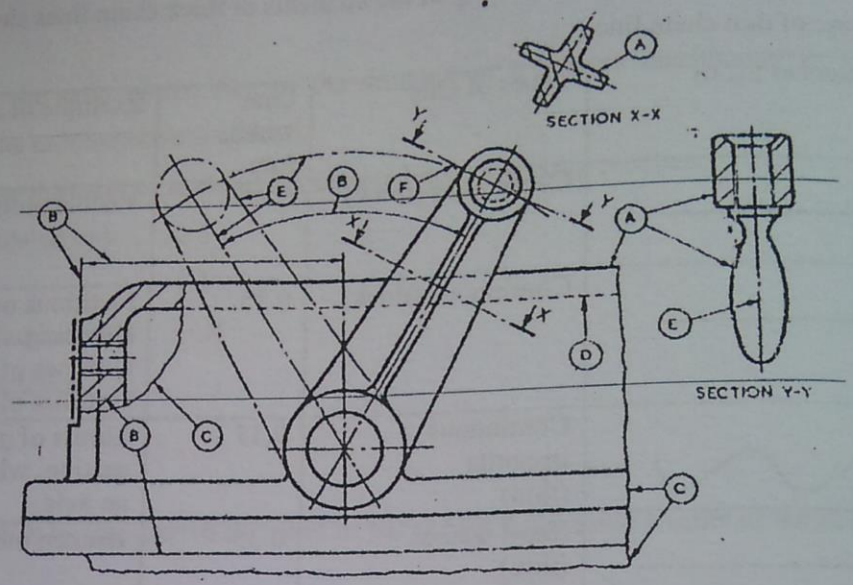

Non-Continuous Lines

The continuous lines (line types A, B and C) are easier to drawn than the non-continuous lines (line types D, e, F and G). Whereas the width of continuous lines is the only characteristics of these lines, the width as well as length of the gap, short dash and long dash play an important roll in differentiating these lines, the length of these entities depends on the scales (size) of the view. However the following is proposed for:

- $Gap \cong 1mm$
- $2mm \leq Short\ dash \leq 3mm$
- $15mm \leq Long\ dash \leq 30mm$

Straight Lines

This refers to all the types of lines mentioned above (A, B,……, G)

Horizontal Lines

The Tee square in conjunction with the drawing board (DB) is required for horizontal lines. The useful edge of the herd of the T-square must be pressed against the working edge of the drawing board by means of the four fingers of the left hand. In order to ensure that the T-square lies on the drawing sheet the left hand must rest on (presses) the blade. For a right-handed person you

draw from left to right with the pencil inclined at 60OC to the surface of the board. T-square is for drawing only horizontal lines.

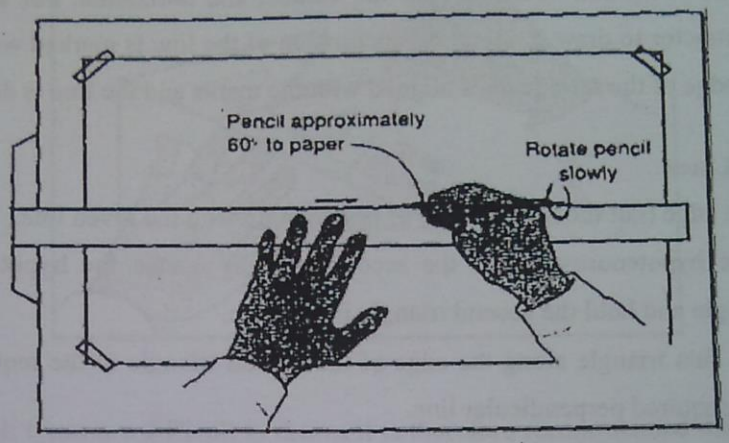

Vertical Lines

The principal edges of either 60/30 or 45/45 set squares can be used in conjunction with the T-square to draw vertical lines.

i. Ensure that the edge of the T-square is aligned with the left edge of the drawing board.
ii. Align the one edge of the set-square with the top edge of the T-square, and hold both the set-square and the T-square in position with the left hand.
iii. Draw from bottom to top.

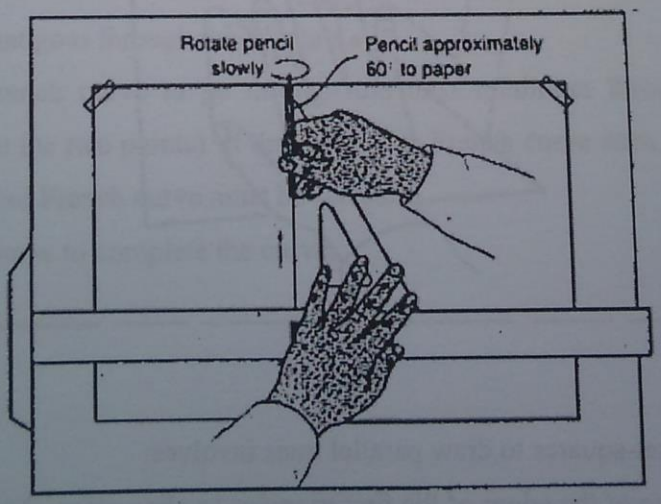

Inclined Lines (at 30°C, 60°C and 45°C to the horizontal or vertical)

The inclined edges of the set-squares in conjunction with the T-square can be used to draw lines inclined at 30OC, 60OC and 45OC to both the vertical and horizontal. For any other inclined lines use the protractor to draw it. Here, the inclination of the line is marked with the help of the protractor. The edge of the set-square is aligned with the marks and the line is drawn.

Perpendicular Lines

i. Align the edge (not the hypotenuse) of one triangle with the given line.
ii. Align the hypotenuse-edge of the second triangle against the hypotenuse of the first triangle and hold the second triangle in position.
iii. Slide the first triangle along the edge of the second triangle to the required position and draw the required perpendicular line.

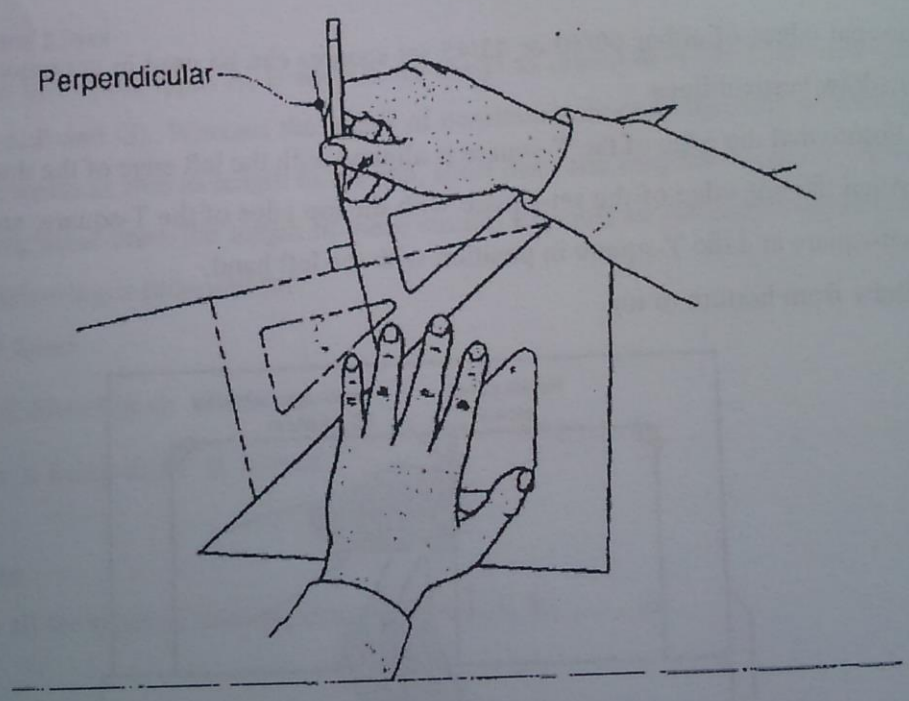

Parallel Line

Making use of two set-squares to draw parallel lines involves:

i. Setting up one of the edges of the first triangles to align along the given line.
ii. Align the edge of the second triangle along the base the first triangle
iii. Hold the second triangle in position, and slide the first triangle along the edge of the second triangle to its new position and draw the parallel line required

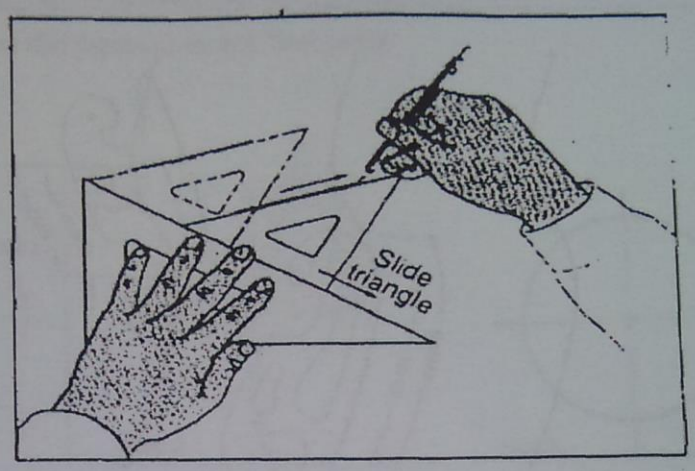

Curved Lines

Curved lines of all types are difficult to drawn it is therefore recommended that students practice the curved line drawings of all types.

Irregular Curved Lines

French curves are used to draw curves that are neither circles nor arcs. Examples of such curves are cycloids, parabolas, ellipses, involutes etc. the nature of the curvature along the edges should be noted. The process of drawing such curved line involves:

i. A set of points are used to locate the required curve,
ii. Align a selected French curve that the edge goes through a minimum of three points.
iii. Draw a line that goes through these points.
iv. Adjust the French curve to go through the next minimum three points (these points should include the two points). If that particular French curve does not fit the trend of the curve a different French curve must be selected,
v. Repeat these steps to complete the curve.

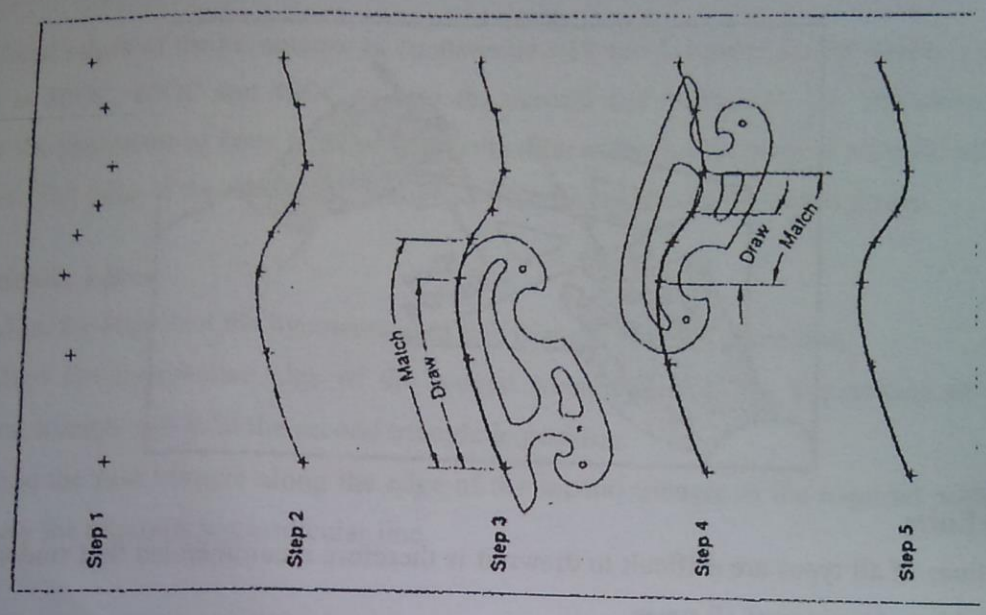

Regular Curved Lines

Circles or arcs are drawn with a pair of compass. The needle is required to be slightly inserted inside the paper. Therefore it must be about 1mm longer than the lead point. The lead msut be about one degree softer than the pencil lead. This is necessary to reduce the amount of pressure required on the lead to maintain the uniform darkness in all the lines.

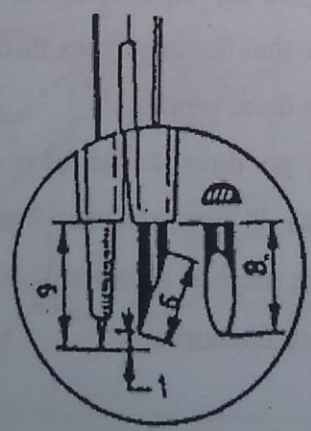

i. Draw two perpendicular centre lines to mark the centre of the circles or arc, and used the scale to mark the radius along one of these centre lines.

ii. Set the compass point at the intersection of the centre lines; set the compass to the radius by aligning the lead point of the compass with the mark on the centre line

iii. Draw the circle or arc leaning the compass in the direction that the circle is to be drawn, putting most of the pressure on the lead point.

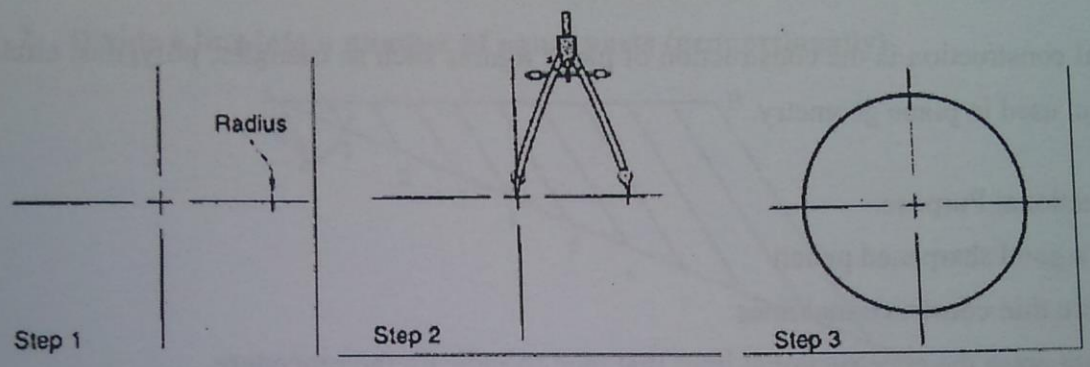

2.0 GEOMETRIC CONSTRUCTIONS

Geometrical construction is the construction of plane figures such as triangles, polygons, circles, tangents, etc. used in plane geometry.

For Constructional Purpose:-

- Use a good sharpened pencil
- Ensure thin constructional lines
- Do not erase the constructional lines that tend to indicate the procedure.

Tools Required:-

- Drawing board
- T-square
- Straight edge instrument (set-squares,)
- A pair of Compass

2.1 LINES

A point occupies space and has no width, length or breadth.

A line is the trace of a point moving in space – not necessarily a straight line

A straight line is the shortest distance between two points.

1. **Perpendicular Bisector of Line AB**

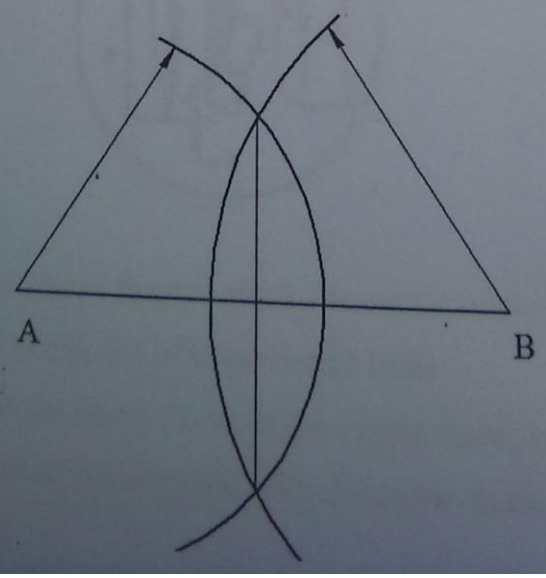

i. With the points A and B as centres describe arcs of the same radius R> half $\overline{AB}$ to intersect one another.

ii. Draw a line through the intersection points.

2. Divide a line into a number of equal parts (proportionally)

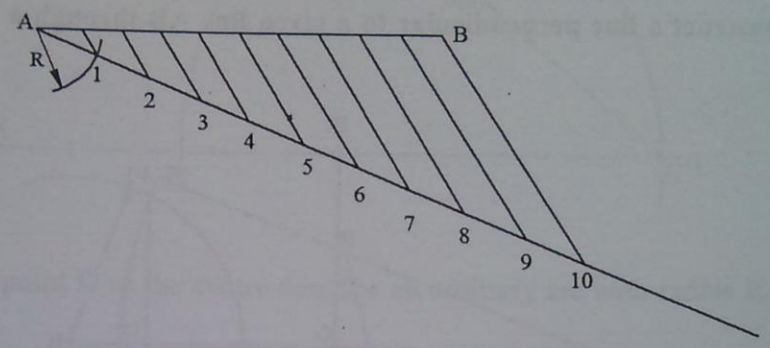

i. Draw a line from A at an acute angle to the given line AB.

ii. Describe arcs with a constant radius R on the line drawn in step I to obtain 1, 2, 3 etc.

iii. Draw a line from the last point to B

iv. Obtain lines parallel to line in step 3 through the other points to intersect the line AB

3. To construct a line perpendicular to a given line AB through a point C on the line

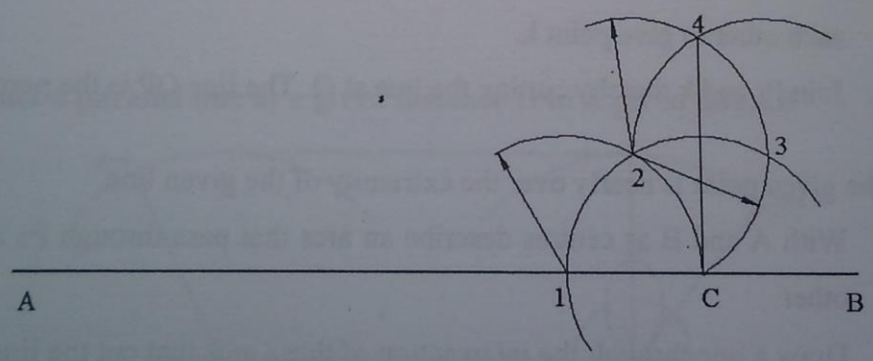

i. With any arbitrary radius R, and C as centre describe an arc to intersect the line AB to give point 1.

ii. With the same radius R and with 1 as centre, describe arc to intersect the arc obtained in step 1 to give point 2

iii. With point 2 as centre and same radius R describe arc to obtain points 3.

iv. With points 2 and 3 as centres describe arcs to intersect one another to obtain point 4.

v. The line 4C is perpendicular to AB.

4. To construct a line perpendicular to a given line AB through a point P outside the line

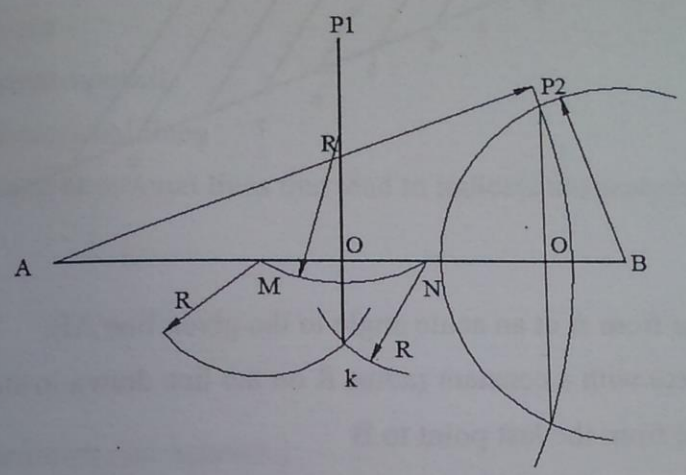

a. The given point is nearly over the middle of the give line

1. With any arbitrary radius R and P_1 as centre describe an arc to intersect the line AB to give points M and N.
2. With the same radius R and with M and N as centre, describe arcs to intersect each other to give point k.
3. Join P_1 and k thereby cutting the line at O. The line OP is the perpendicular line.

b. The given point is nearly over the extremity of the given line

1. With A and B as centres describe an arcs that pass through P_2 and intersect each other
2. Draw a line through the intersection of these arcs that cut the line at O.
3. The line OP is the perpendicular.

5. **Construct a line through the point D and parallel to a given line (AB)**

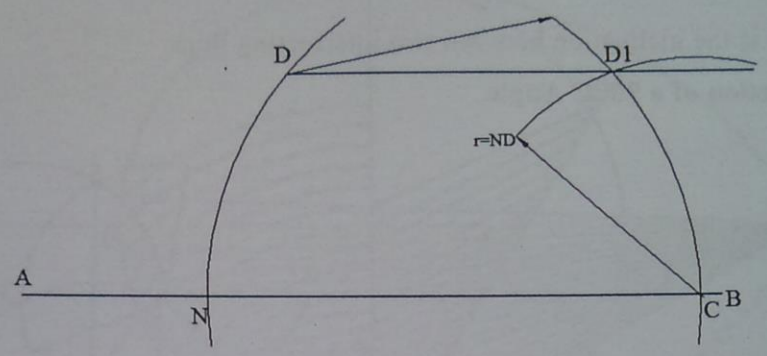

i. With the point D as the centre describe an arbitrary arc with radius R to cut the line AB at C

ii. At point C on the line AB describe an arc with the same radius R through D to intersect the line AB at N

iii. With the point C as centre describe an arc with the radius r = ND to cut the arc in step 1 to obtain the point D1

iv. Draw the parallel line through points D and D1

6. **Construct a parallel line at a given distance D to A given line AB**

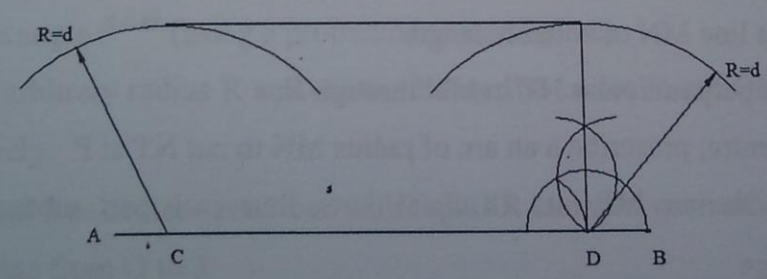

i. Select two points C and D on line AB at convenient distance apart.

ii. With points C and D as centres describe arcs with radius R=d on one side of AB.

iii. Erect a perpendicular at D.

iv. Draw a line just to touch the two arcs.

2.2 ANGLES

An angle is the inclination between two intersecting lines.

1. **Construction of a 90°C Angle**

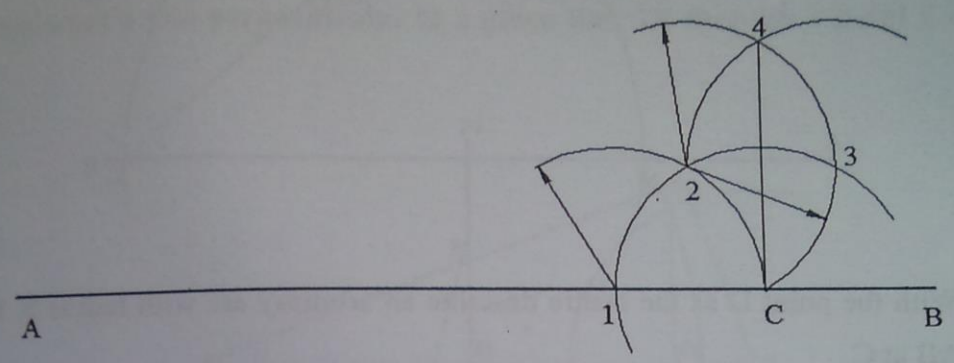

2. **Construction of a 60°C Angle**

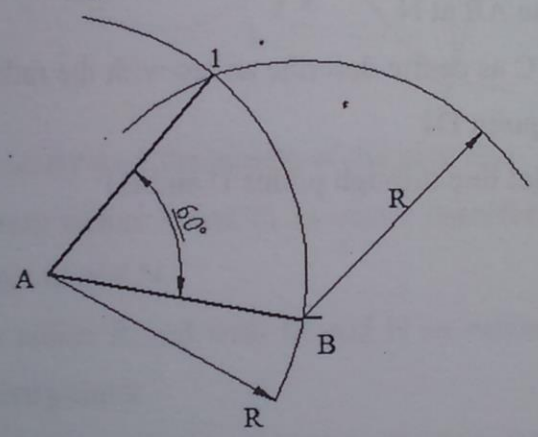

3. **Using the Scale of Chords to Measure Angles of Any Magnitude**

   i. Draw a line MN of suitable length

   ii. Erect a perpendicular NT to MN through N,

   iii. N as centre, prescribe a an arc of radius MN to cut NT at P

   iv. Divide the arc MP into 18 equal parts, thus each part subtends at N an angles of $\frac{90^{o}}{18} = 5^{o}$

   v. With M as centre turn down the divisions to the line MR and finish the scale as shown below.

   vi. MR is the required scale of chords required to read each part equal to 5°.

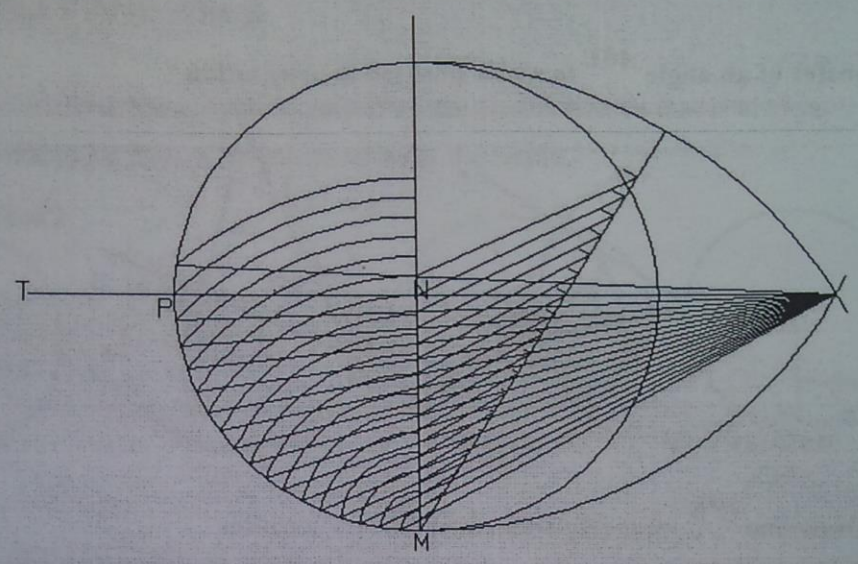

4. Bisection of an Angle (30°, 15°, 45°)

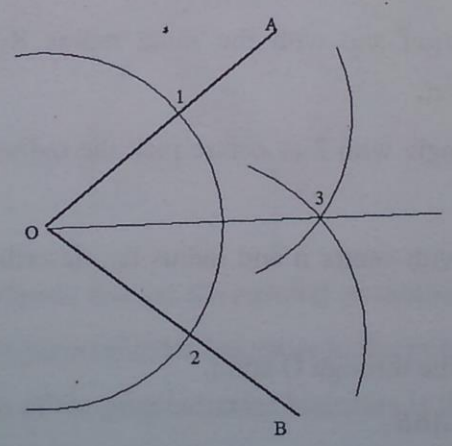

i. Draw the angle $A\hat{o}B$ (using a protractor or a setsquare)

ii. With an arbitrary radius R and centre O describe an arc to cut OB and OA at 1 and 2 respectively.

iii. With 1 and 2 as centers describes with radius R intersect each other at 3.

iv. Draw a line from O to 3

v. The angle $A\hat{o}3 = 3\hat{o}B$

5. **Transfer of an angle $A\hat{o}C$ to a new position & orientation**

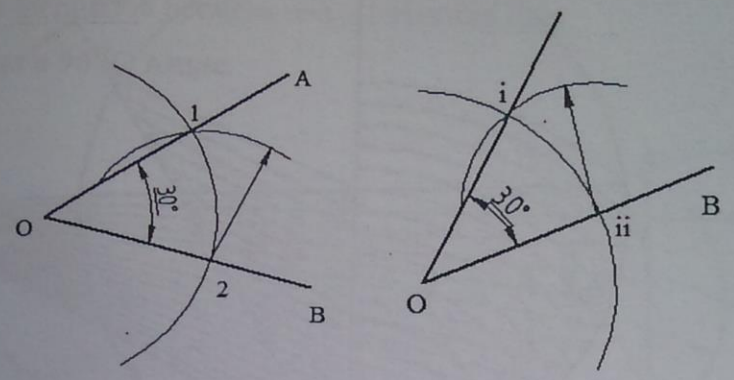

1. Draw line $O'B'$ properly oriented at the new location.
2. On the original angle with O as datum and with any arbitrary radius R_1 describe an arc to cut OA and OB at 1 and 2 respectively.
3. At the new position and with the same radius R_1, describe an arc with centre O' *to cut* $O'B'$ *at ii.*
4. On the original angle with 2 as centre pick the radius $R_2 = 12$ of the arc that passes through 1.
5. At new position with centre ii and radius R_2, describe an arc to cut the arc drawn in step 3 at i.
6. Draw as straight line through O and i.
7. Angle$< i\hat{o}ii = < A\hat{o}B$.

2.3 CIRCLES AND ARCS

A circle is a plane figure bounded by the circumference that is always equidistance from a fix point known as the centre.

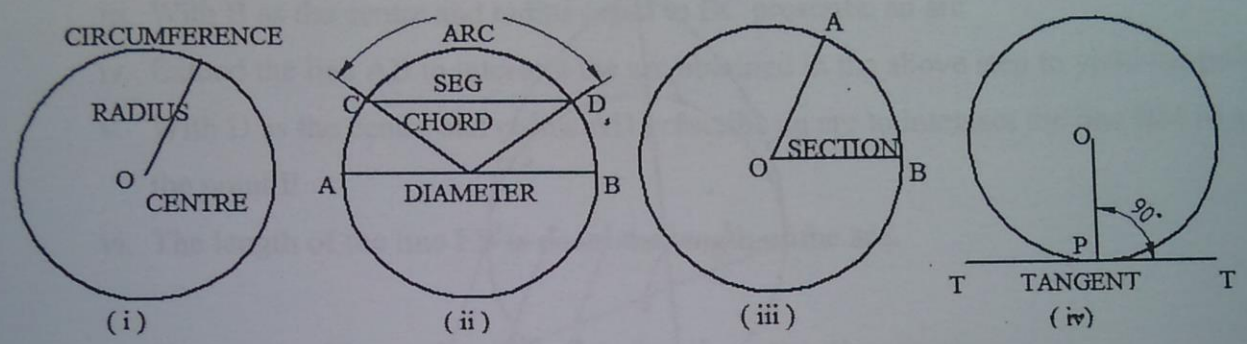

1. To find the centre point of a circle

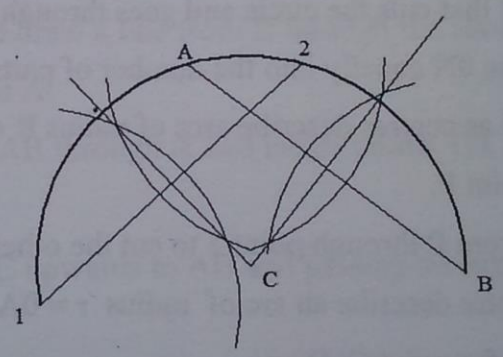

i. Construct two chords that are not parallel to another on the circle. ii. Construct perpendicular bisectors to the two chords.

iii. The interception of the perpendicular bisectors is the centre point.

2. Divide the circumference of a circle into a number of equal parts inscribe a regular polygon given the diameter of a circle

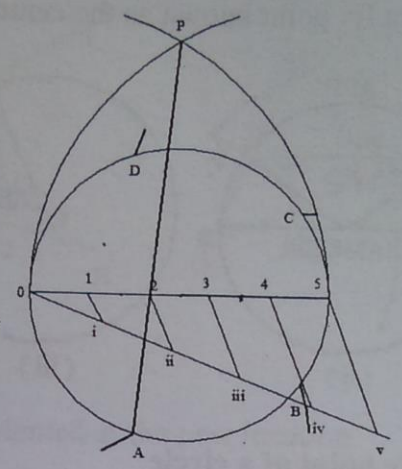

i. Draw line 0N that cuts the circle and goes through the centre of the circle.

ii. Divide the line 0N equally into the number of parts required eg.5.

iii. With 0 and N as centres describe arcs of radius R = diameter to intersect each other to give the point P.

iv. Draw a line from P through point 2 to cut the other side of the circle (point A)

v. With A as centre describe an arc of radius r = 0A to insect the circle at point B.

vi. Repeat step 5 for point C, D, etc.

3. Determine the Length of an arc

There are two methods available:

METHOD A

i. The chord is equally divided into four parts and labeled 1 to 4

ii. With A as centre and radius A1 an arc is prescribed to give point C on the arc.

iii. Draw a line from C to 3, the distance C3 is equal to half the length of the arc AB

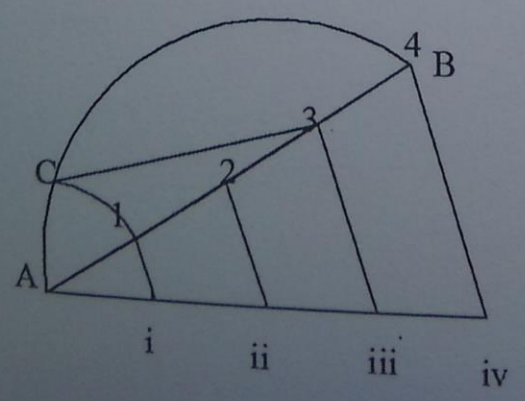

Method B

i. Draw the chord AB, and bisect the chord to intersect the arc to give the point C. This perpendicular bisector will also go through the centre of the arc O.

ii. Draw a line from O to B, and construct a perpendicular to OB through B

iii. With B as the centre and radius equal to BC prescribe an arc

iv. Extend the line AB to intersect the arc obtained in the above step to yield the point D

v. With D as the centre and radius AD prescribe an arc to intersect the line BM to give the point E

vi. The length of the line EB is equal the length of the arc.

4.0 Determine the Circumference of circle (given the diameter)

i. Draw a circle with the required diameter

ii. Select a point B the circle and draw a line from B through the centre to intersect the other side of the circle to give the point A.

iii. Construct a perpendicular to AB through A and locate points 1D, 2D and 3D at interval of the diameter.

iv. Construct a line inclined 30°C upwards to AB and passing through the centre to cut the circle at C

v. Construct a line parallel to 3DA passing through C to intersect line AB at E

vi. Join E to 3D, the length 3DE is the circumference.

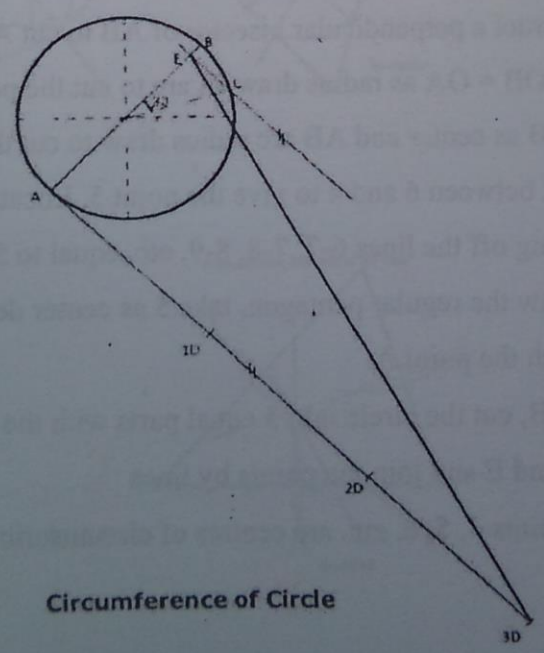

Circumference of Circle

2.4 POLYGONS

A polygon is a plane figure bounded by more than 4 straight sides. (pentagon hexagon, heptagon, octagon, nonagon, decagon etc.). A regular polygon has all its sides equal (exterior and interior angles are constant). It is possible to construct a circle within (inscribed) a regular polygon so that all its sides are tangential to that circle. The diameter of that circle is called the diameter of the polygon. It is also possible to circumscribe a circle to a regular polygon.

1. **Construct a regular polygon (give the length of a side)**

APPROXIMATE

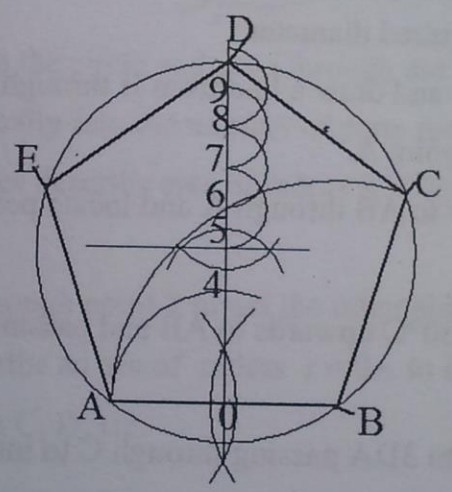

i. Draw AB equal in length to the side of the regular polygon

ii. Construct a perpendicular bisector of AB to cut AB at O

iii. With OB = OA as radius draw an arc to cut the perpendicular bisector at 4.

iv. With B as center and AB arc radius draw to cut the bisector at 6.

v. Bisect between 6 and 4 to give the point 5. Locate the point 7, 8,9, etc. by stepping off the lines 6-7, 7-8, 8-9, etc. equal to 5-6.

vi. To draw the regular pentagon, take 5 as center describe a circle that passes through the point A.

vii. From B, cut the circle into 5 equal parts with the radius equal to AB to obtain C,D, and E and join the points by lines

viii. The points 4, 5, 6, etc. are centres of circumscribed circles

2. Construct a regular polygon (given the length of a side) EXACT

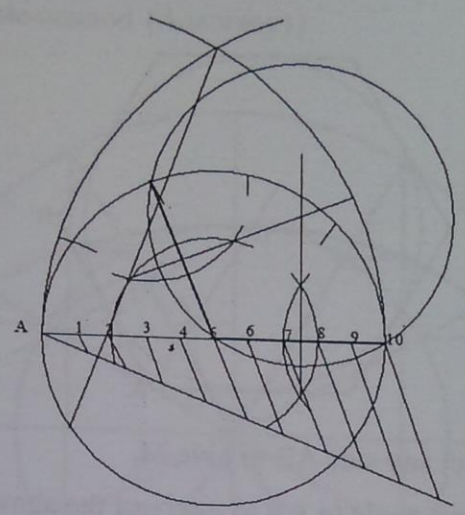

3. Circum-center, in-center, ex-centre and center of a given triangle

Perpendicular bisector of any two sides

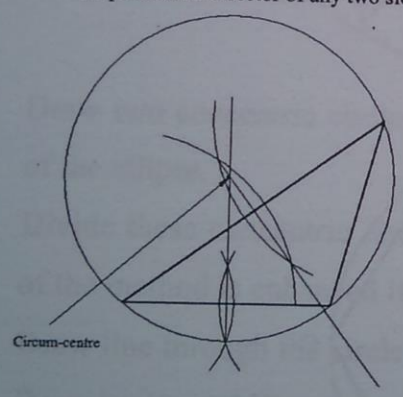

Bisecting the two Exterior angle

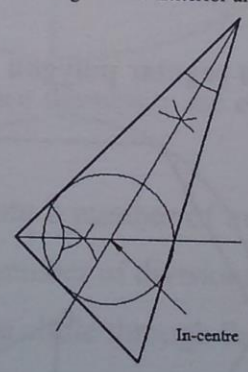

Bisecting the two exterior angle

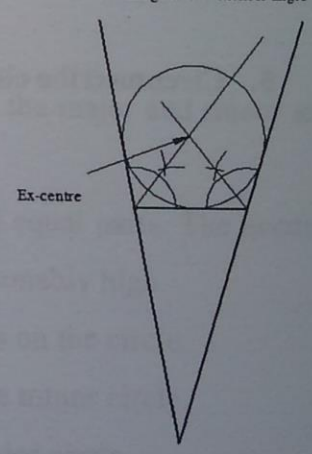

Perpendicular bisector of the side

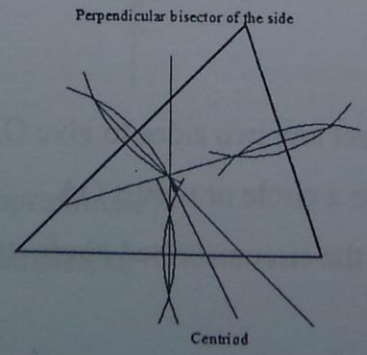

4. **To construct the inscribed circle of a regular polygon**

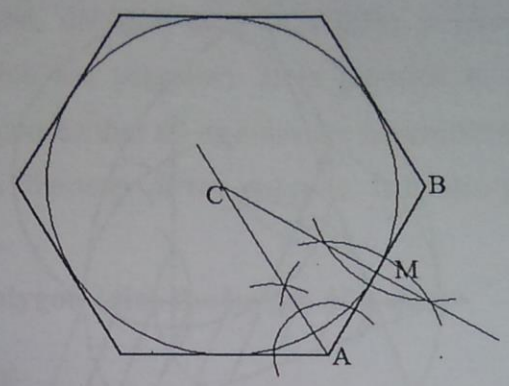

i. Perpendicular bisect any side AB to give M,

ii. Bisecting of adjacent angle to AB to intersect the above perpendicular bisector to give the center C

iii. Center C prescribe a circle or radius CM.

iv. C is the center of the inscribed circle (the center is called the incentre).

5. **Circumscribe circle of a regular polygon**

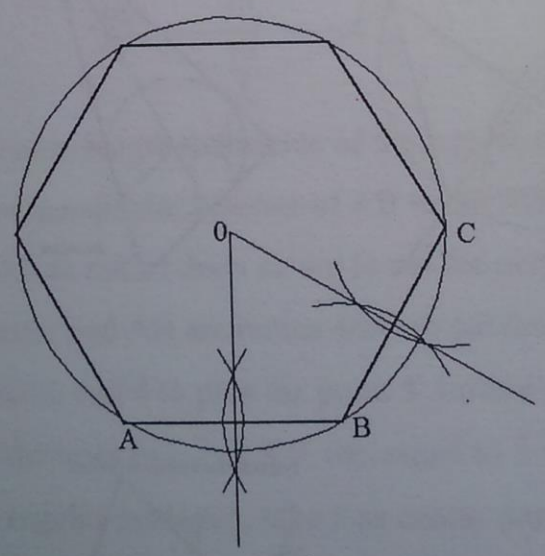

i. Perpendicular bisect any two sides to give O,

ii. Center O prescribe a circle or radius OA

iii. O is the center of the circumscribed circle (the center is called the ex-center).

2.5 ELLIPSE

1. Construction of an Ellipse

1st Method (concentric circle method {Accuracy})

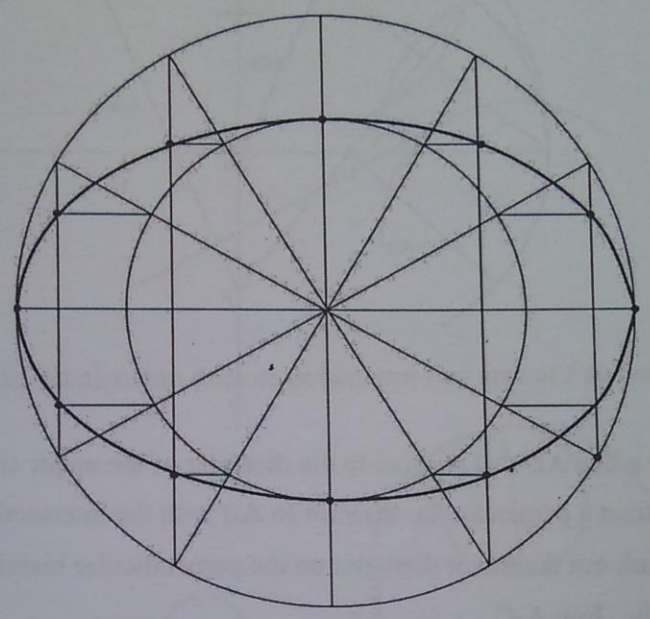

i. Draw two concentric circles whose diameters are equal to the major and minor axes of the ellipse.

ii. Divide these concentric circles into a number of even and equal parts. The accuracy of the method is enhanced if the number of divisions is reasonably high.

iii. Draw line through the circle of the circle through the points on the circle.

iv. Draw horizontal lines through the points intersection on the minor circle.

v. Draw vertical lines through points of intersection on the major circle.

vi. The point of intersection of the horizontal and the vertical lines for each divisor gives a point on the ellipse.

vii. Join the intersection points.

2nd Method (four centre method-{Approximate})

Given major diameter, D, and minor diameter, d.

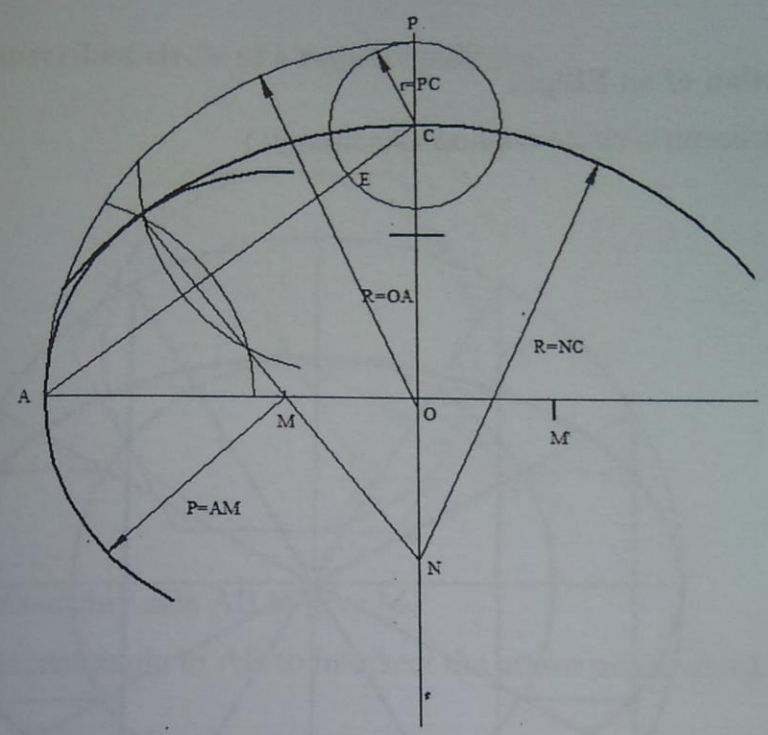

i. Draw a line AB that is equal to the diameter of the major circle

ii. Construct a perpendicular bisector to AB with the intersection being O. iii. Mark out the minor diameter on the perpendicular bisector (OC and OD) iv. Join A-C

v. With O as center and radius AO descried an arc to intersect the perpendicular bisector at P

vi. With C as center and radius CP describe an arc to cut line AC at E

vii. Construct the perpendicular bisect of line AE to cut the horizontal at M and the vertical at N

viii. With M as center describe arc with radius AM.

ix. With N as center describe arc with radius NC to tangent arc AM

x. Transfer M and N to M' and N'.

2.6 TANGENCY

A line is said to be tangential to another line if it touches the line but does not cross it. We normally speak of a straight line and a circle or tangency relationship.

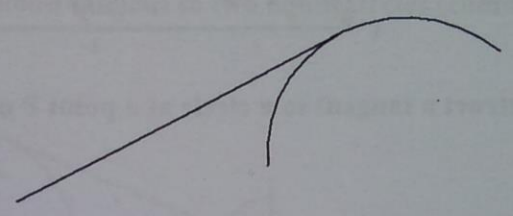

However, tangential relationship does exist between two arcs or / and circle:

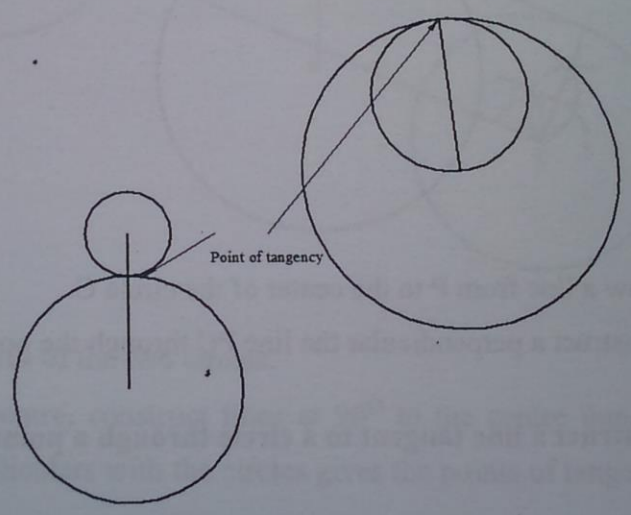

I. STRAIGHT LINE-ARC TANGENCY RELATIONSHIP Theory

The semi-circle theory: a line drawn from one end point of a diameter to a point on a

semi-circle and than to the other end of the diameter will be at 90° to each other

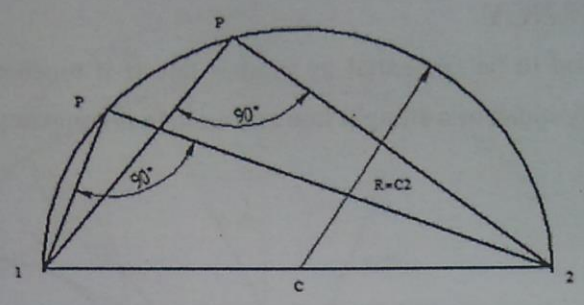

1. **To construct a tangent to a circle at a point P on the circle**

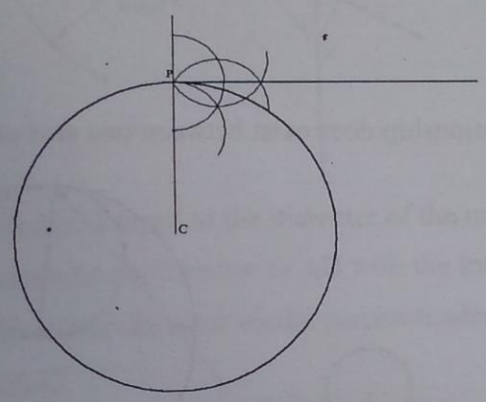

i. Draw a line from P to the center of the circle C.

ii. Construct a perpendicular the line PC through the point P

2. **To construct a line tangent to a circle through a point A outside the circle**

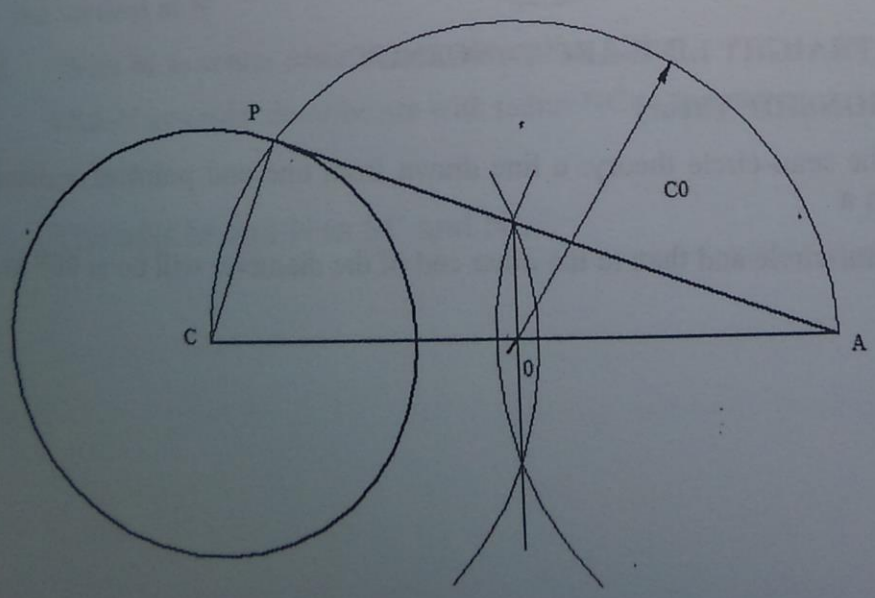

i. The point A is connected to the centre, C of the circle.

ii. Erect a perpendicular bisector to CA which cuts CA at point O

iii. With O as centre draw a semi-circle to cut the circle at A.

3. To construct a common tangent to two equal circles (common exterior tangent)

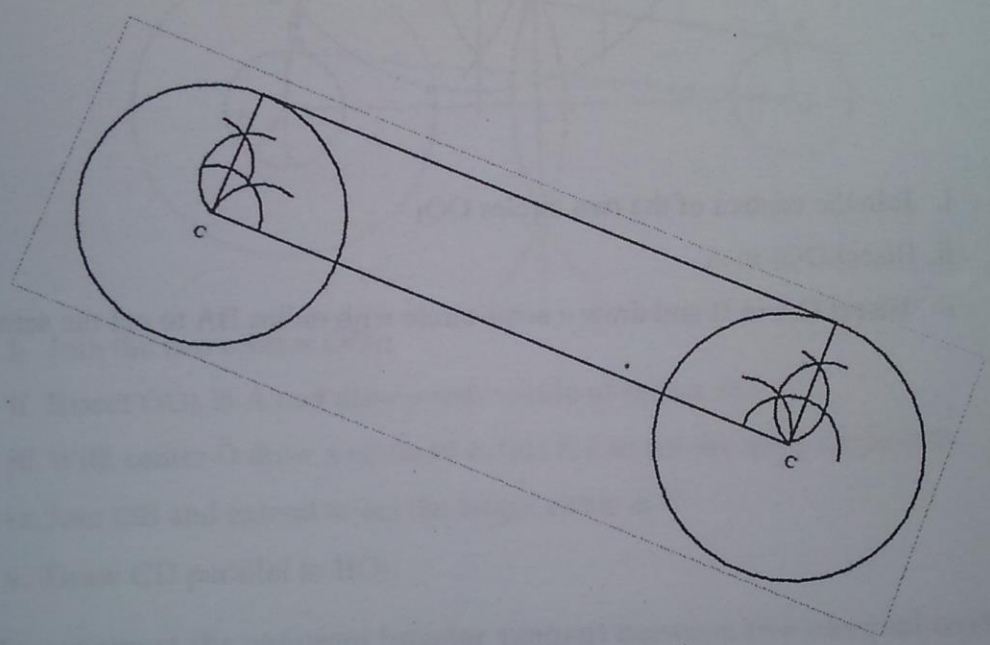

i. Join the centres of the two circles.

ii. From each centre, construct lines at 90° to the centre line. The intersection of these perpendiculars with the circles gives the points of tangency.

4. To construct the common interior (Transverse or cross) tangent to two equal circles

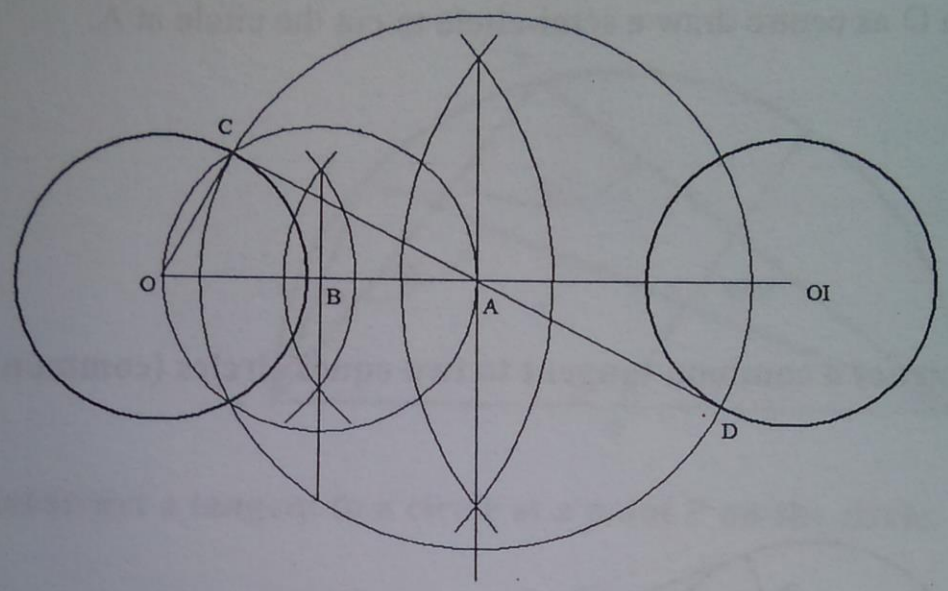

i. Join the centres of the two circles OO_1

ii. Bisect OO_1 in A

iii. Bisect OA in B and draw a semi-circle with radius BA to cut the semi-circle a

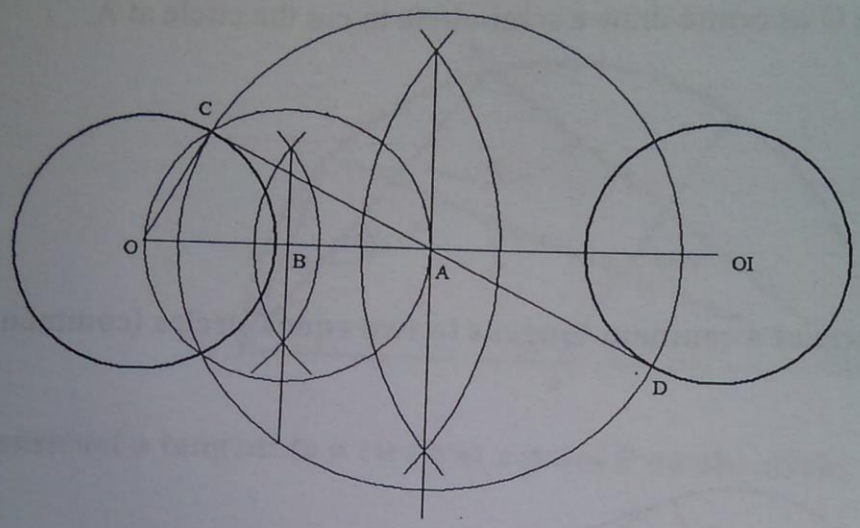

i. Join the centres of the two circles OO_1

ii. Bisect OO_1 in A

iii. Bisect OA in B and draw a semi-circle with radius BA to cut the semi-circle at C.

iv. With centre A and radius AC draw an arc to cut the second circle in D, CD is the required tangent.

5. To construct the common exterior tangent between two unequal circles.

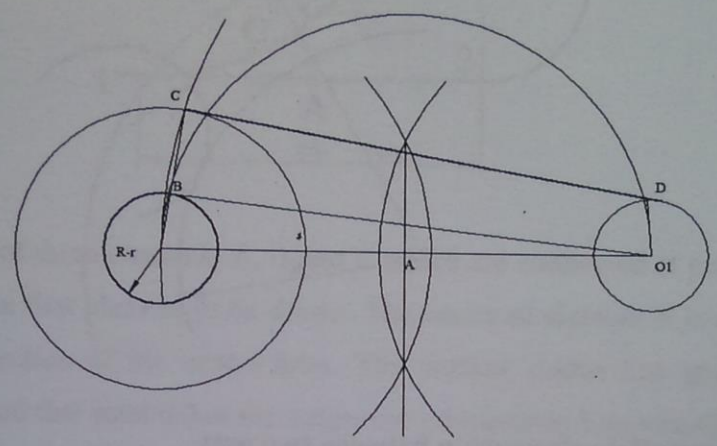

i. Join the two centres OO_1.

ii. Bisect OO_1 in A and draw a semi-circle of radius AO

iii. With centre O draw a circle of radius R-r to cut the semi-circle at B.

iv. Join OB and extend to cut the larger circle at C

v. Draw CD parallel to BO_1.

6. To construct the common interior tangent between two unequal circles.

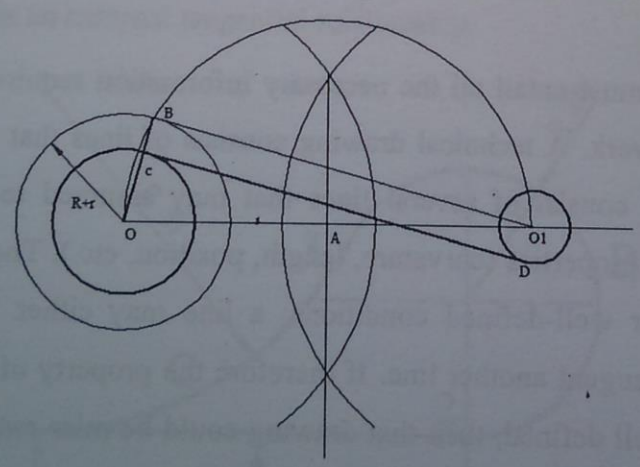

i. Join the centres OO_1

ii. Bisect OO_1 in A and draw a semi-circle of radius OA

iii. With centre O draw a circle of radius R+r to cut the semi-circle at B

iv. Join OB. This cuts the small circle at C

v. Draw CD1D parallel to BO_1

II. ARC-ARC TANGENTIAL RELATIONSHIP BETWEEN TWO ARCS

1. External tangential relationship between two arcs

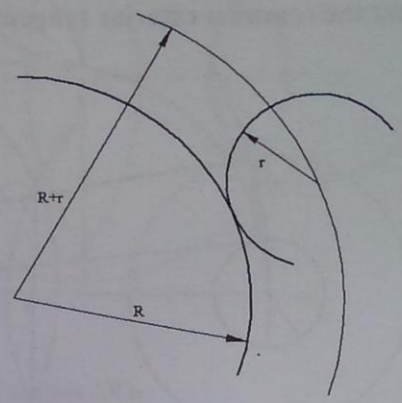

2. Internal tangential relationship between two arcs

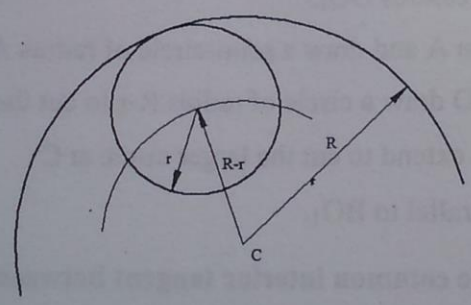

A technical drawing must entail all the necessary information required to reproduce it. It must not be left to guess work. A technical drawing consists of lines that represent the projection of the edges. This may consist of several lines that may assumed to be elements. These lines (elements) have their properties (curvature, length, position, etc.). These lines are also connected to one another under well-defined conditions: a line may either intersect another line at a particular angles or tangent another line. If therefore the property of a line or its relationship to another line is not well defined, then that drawing could be miss-read. Take a look at the figure below:

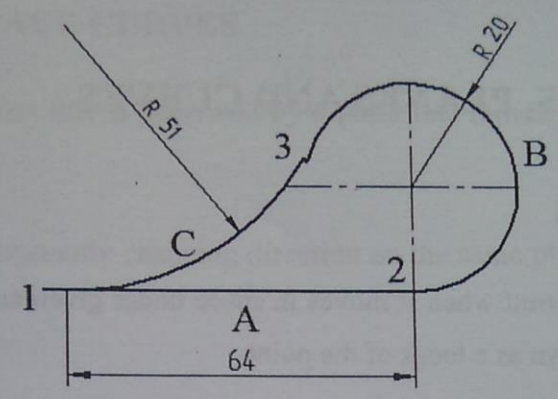

This figure consists of three elements A, B and C which are connected at points 1, 2, and 3. The element A will be the first element to be drawn. The centre of element B is explicitly given: it is located y the intersection of the centre lines. The vertical centre line goes right through the connecting point 2 and that establishes the tangential relationship between elements A and B. On the other hand, the centre of element C is not explicitly given. It is therefore determined by determined by determining its relationships at points 1 and 3.

The location of point 1 is clear given, and therefore the centre of the arc C that goes through 1 must be on an arc of radius 51 from 1. That means it could be an intersect or a tangent point. The location of the point 3 is not explicitly given. The simplest assumption required to locate point 3 is to assume the point 3 is an external tangential relationship.

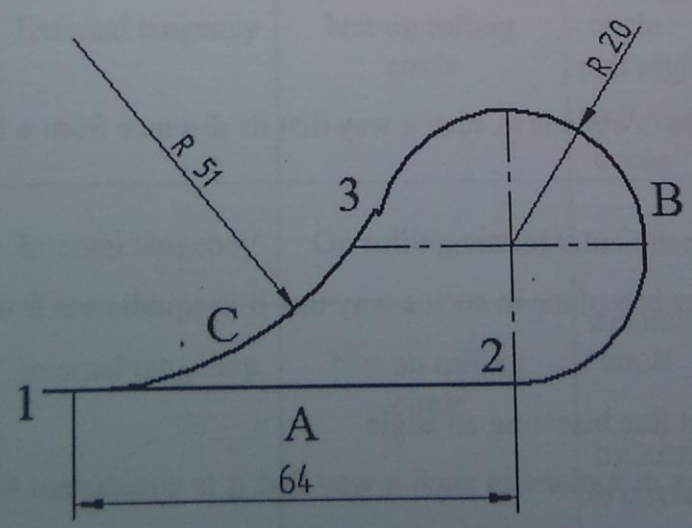

3 LOCI OF POINTS, PLANES AND CURVES

3.1 LOCI OF POINTS

The path traced out by a point when it moves in space under given conditions or in accordance with a definite law, is known as a locus of the point.

Application

Determine the path of a given point in a mechanism such as:

- Connecting rod,
- Valve gear, and
- Cam and link motion etc

Importance

- The law governing the movement of the point.

Examples:

- Locus as a circle

When the point moves in a plane in such a way that its distance from a point is always a constant.

- Locus as a straight line

When the point moves in a plane in such a way that its distance from a fixed line AB is always a constant.

- Locus as a perpendicular bisector

When the point moves in a plane in such a way that it is equidistant from two fixed points A and B in the same plane.

- Locus a straight line bisecting an angle

When the point moves in a plane in such a way that it is equidistant from two converging lines AB and C

3.2 PLANE AND SPACE CURVES

Curve or curve line is a line that is generated by a point that moves in a constantly converging lines AB and CD.

A point that moves in a constantly changing direction on the same plane generates a plane curve or single curved line.

Types of plane curves

a. Cycloidal curves

	Curved	Tangency	Position of particle		
i.	Cycloid	Line-circle	On rolling circle		
	Trochoid	Line-circle	Not on rolling circle	a)Within rolling circle	(inferior)
				b)Outside rolling circle	(superior)
ii.	Epicyloid	External tangency	On rolling circle		
	Epitrochoid	External tangency	Not on rolling circle	a)within rolling circle	(inferior)
				b)Outside rolling circle	(superior)
iii.	Hypocycloid	Internal tangency	On rolling circle		
	Hypotrochoid	Internal tangency	Not on rolling circle	a)within rolling circle	(inferior)
				b)Outside rolling b circle	(superior)

b. **Involutes**

i. Involute of a circle

ii. Involute of a polygon (regular or non – regular)

Application: Casings of blows and centrifugal pumps.

c. **Spirals**

i. Archimedian spiral,

ii. Logarithmic spiral

3.3 CYCLOIDAL CURVES

Is generated by a point attached to a circle that rolls without slipping along a fixed straight line or circle.

The rolling circles is the circle that rolls.

The generating circle is the imaginary circle on which the point is attached.

The straight line or circle along which the rolling circle rolls is called the directing line or circle.

3.3.1 CYCLOID

Cycloid: is generated by a point on the circumference of a circle that rolls along a fixed straight line.

This situation is similar to the wheel and reflector of a bicycle on a horizontal road. The path of the particle or reflector can be traced if and only if the rolling circle or wheel can be advanced in steps and the position of the particle tracked. For this to be made possible by constructional means certain steps must be taken.

a. Division

b. Advancement of wheel, and

c. Tracking of point

a. **Division:**

- The division must go through the particle
- In order to reduce the number of constructions, these divisions (arcs) must be even and equal.

$$Number\ of\ divisions = \frac{360^o}{Angle\ between\ Point\ and\ principal\ /_{Even\ number\ if\ the\ division\ is\ odd}}$$

$$Example: Number\ of\ divisions = \frac{360^o}{24/_2} = 24$$

- One basic instrument used for constructional work is a pair of compass. The actual advancement of the wheel is a distance of the are length. The compass cannot pick this length. The chord length that can then be easily picked with a compass must be made approximately equal to the arc length. This condition is only possible if and only if the angle enclosed is small. This means there should be a large number of divisions.

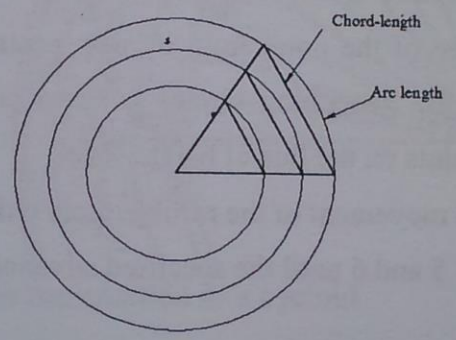

- Track the required travel-distance on the directing line or circle.
- Logically label respective points that aid the constructional process.

b. Advancement of Wheel

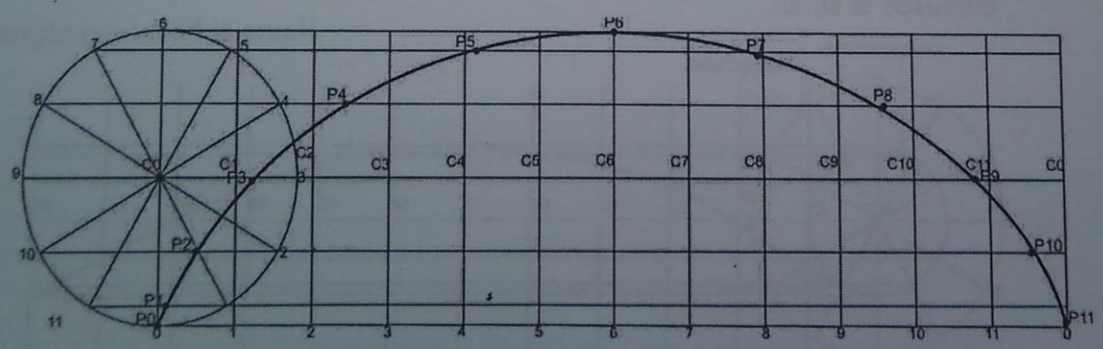

i. Advance the rolling circle a step without slip until 2 on the circle falls on 2 on the straight line. This point becomes the new point of tangency between the line and the circle.

ii. Determine the position of the new centre:

a. At the instant point of tangency the centre will be on a line that is perpendicular to the tangent.

b. At the instant point, the centre will be at a distance equal the radius of the rolling circle.

iii. Determine the position of the new point:

a. For each step advanced of the rolling circle the point moves from one height-level to the other. This height of the point is with respect to the directing line and circle (centre of directing circle)

b. The distance of the point from its new centre is equal to the distance C_oP_o (radius of the generating circle) the two conditions results in one or two intersect points on the line of height-level.

c. The logical movement of the rolling circle will select the right point.

iv. Repeat steps 4, 5 and 6 until the specified advancement of the circle is reached.

a. Trochoid

Trochoid is generated by a point within **(inferior) or outside (superior)** the circle that rolls along a **straight line**

Assumption: The chord length and the arc length of a circle are equal if and only if the angle enclosed is small.

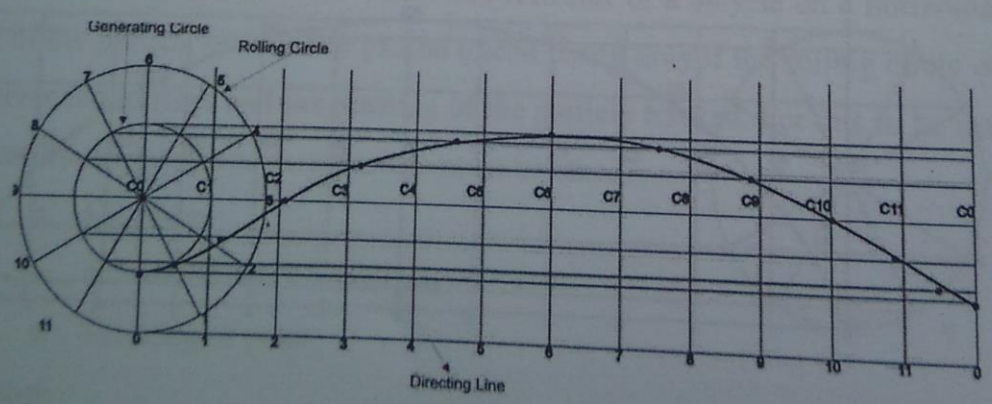

See steps involved in the construction of a cycloid

3.3.2 EPICYCLOIDS

Epicycloid is generated by a point on the circumference of a rolling circle which rolls outside the directing circle. Example gear teeth.

Assumption: The chord length and the arc length of a circle are equal if and only if the angle enclosed is small.

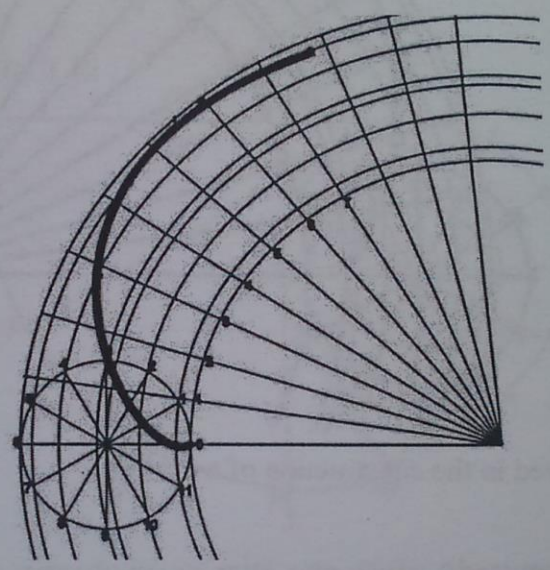

1. See steps involved in the construction of a cycloid

   a. **Epitrochoid**

Epitrochoid is generated by a point **within or outside** a circle which rolls along another circle **outside.**

Assumption: The chord length and the arc length of a circle are equal if and only if the angle enclosed is small.

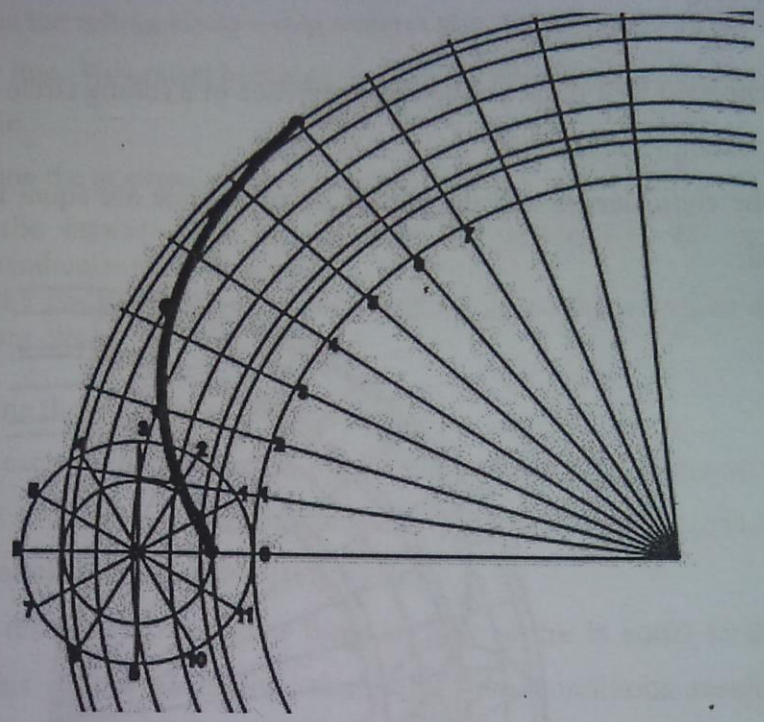

1. See steps involved in the construction of a cycloid

Application:

The cycloid profile obtained by both Epicycloid and hypocycloid paths. The profile consists of both convex and concave sides of a cycloid.

2.3.3 HYPOCYCLOID

A point on a circle that rolls within another circle generates hypocycloid. Construction of the hypocycloid can be undertaken based on the principle or the construction of the epicycloids.

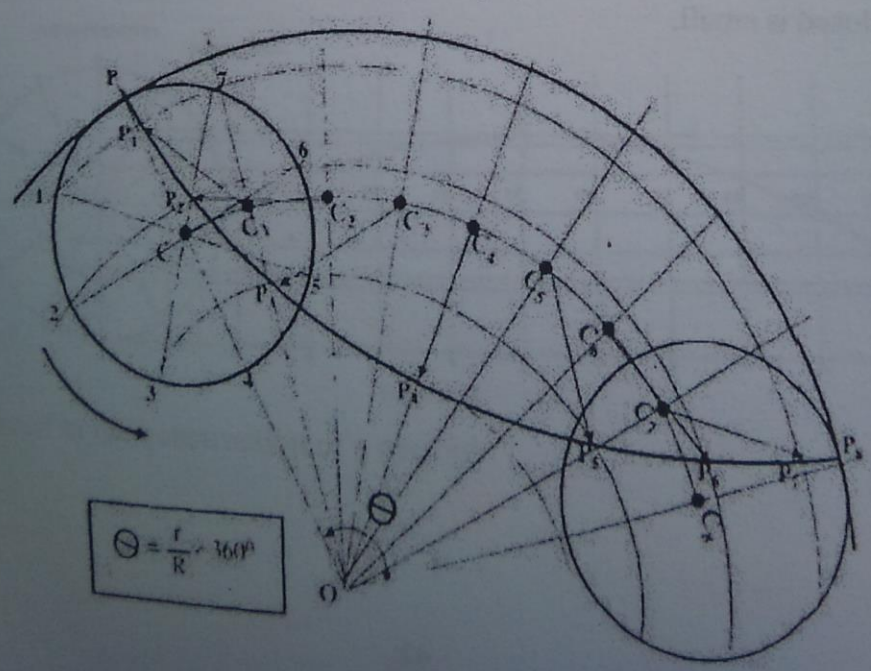

3.4 INVOLUTE, SPIRAL AND HELIX

3.4.1 INVOLUTE

INVOLUTE is a curve traced out by an end of a piece of string when unwound from a fixed circle or polygon.

I. INVOLUTE OF A CIRCLE:

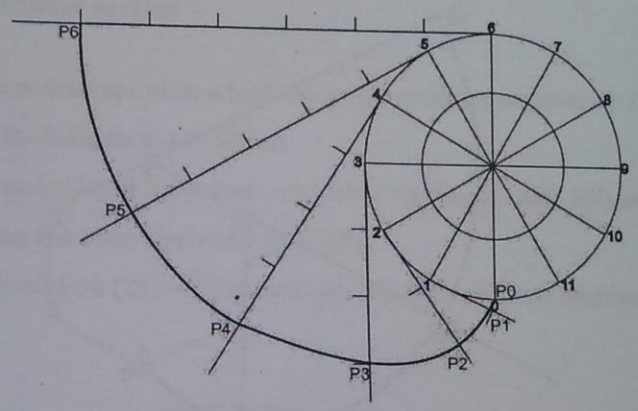

i. Divide into several even divisions with one of the divisional line going through the specified point.

$$Number\ of\ divisions = \frac{360^o}{Angle\ between\ Point\ and\ principal\ /_{Even\ number\ if\ the\ division\ is\ odd}}$$

$$Example: Number\ of\ divisions = \frac{360^o}{24/_2} = 24$$

ii. Logically label respective points that aid the constructional process.

iii. Unwind the string a step without slip.

iv. Determine the position of the new point:

a. At the instant point of contact, the string is tangential to the circle.

b. At that instant the length of string released during this step is equal the arc length of the circle, which is equal to the chord length.

v. Repeat steps 3 and 4 until the specified advancement of the circle is reached.

Application:

The involute profile of a gear tooth

II. INVOLUTE OF A POLYGON

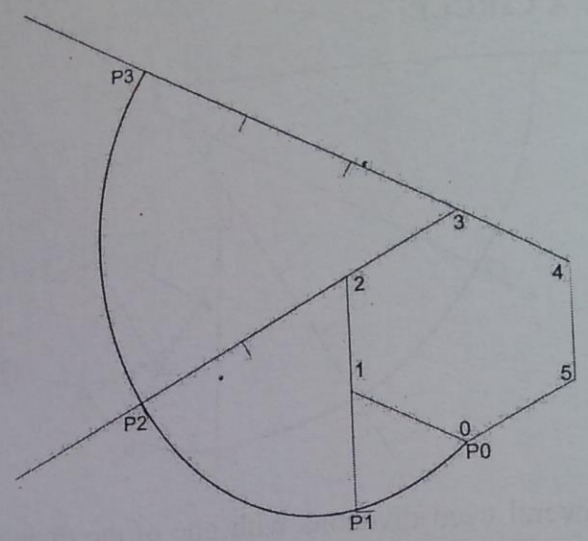

i. Logical label respective points of the polygon that aid the constructional process.

ii. Unwind the string a step without position of the new point: .

iii. Determine the position of the new point:

   a. Within this unwinding step the point of contact remains constant.

   b. Within this unwinding step the additional length of sting released is constant and equal the arc length of the circle, which is equal to the chord length.

vi. Repeat steps 3 and 4 until the specified advancement of the circle is reached.

Application

The casing of a blower can be designed to take the shape of an involute of a square

3.4.2 SPIRAL

The curve generated by a point moving continuously in one direction along a rotating line is called a **Spiral**. The point travels inwards to the pole. The line rotates about a point called the **pole**. The line joining any point on the spiral curve and the pole is called the **radius vector** and the angle between the radius vector and the line in its position is called the **vector angle**

The point is said to have out a revolution if the line completes a revolution. A spiral may make a number of revolutions before reaching the pole.

I. ARCHEMEDIAN SPIRAL

Archemedian spiral curve is traced out when a point moving at a uniform velocity along a line also rotating at a uniform velocity.

The Archemedian spiral is used in the construction of cams, threads of scroll chucks of he lathe machine and in some similar devices.

To construct an Archemedian spiral in which the point makes a number n=2 revolutions before it reaches the pole from R=100mm to r = 30mm:

i. Locate the pole O and draw two concentric circles of radii 100 and 30
ii. Locate P_O on the outer and draw line OP_O
iii. Divide 2 revolution ($2x360^O$) as well as 100-30 into even number

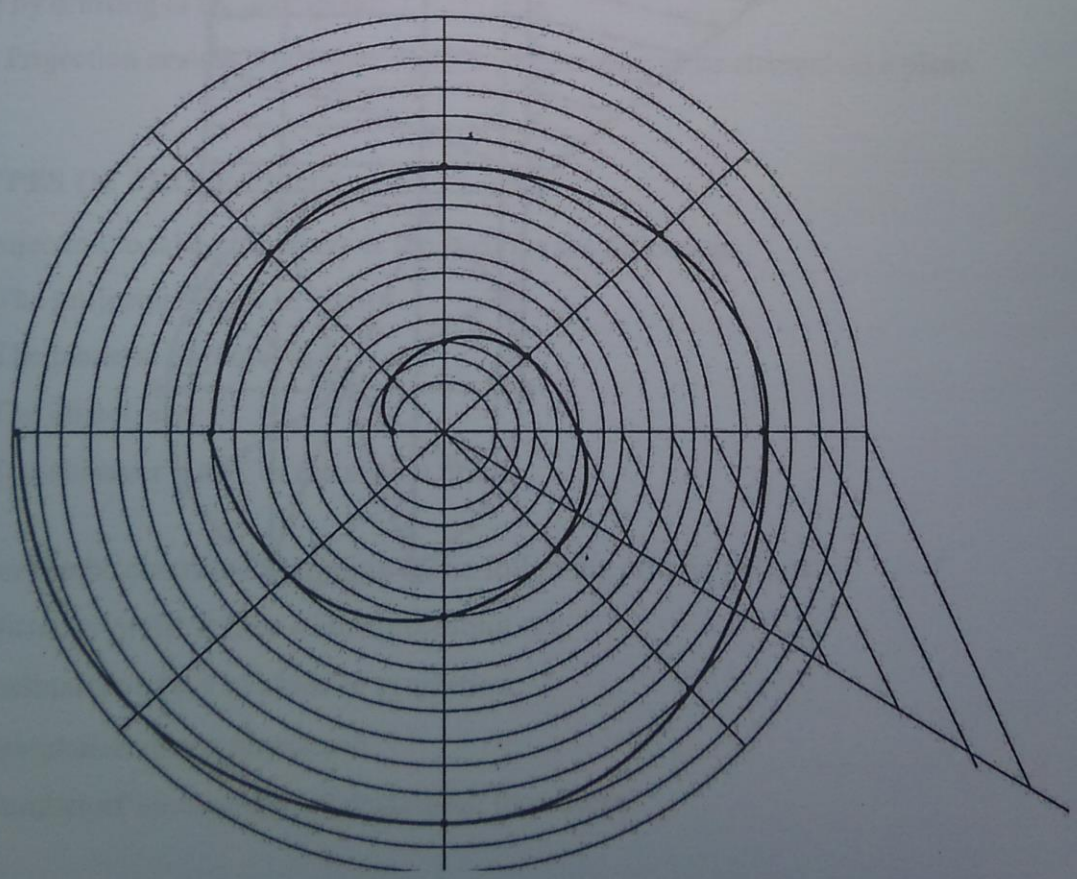

3.4.3 HELIX (CYLINDRICAL HELIX)

A helix curve is traced out by a point that revolves around the surface of a right circular cylinder in such a way that its axial advancement towards the length of the cylinder is uniform.

A helix may be right handed or left-handed i.e. it may be generated by a point which may revolve in either direction around the axis or which may move in either direction parallel to the axis. The distance that the generating point travels parallel to the axis in one revolution, is called the lead or pitch of the helix. The curve of the helix is commonly used in screw threads, springs, spiral stairways conveyors, etc.

i. Draw a circle of the required diameter, and cylinder with the required pitch height.

ii. Divide the circle and pitch distance into equal even number (say 10)

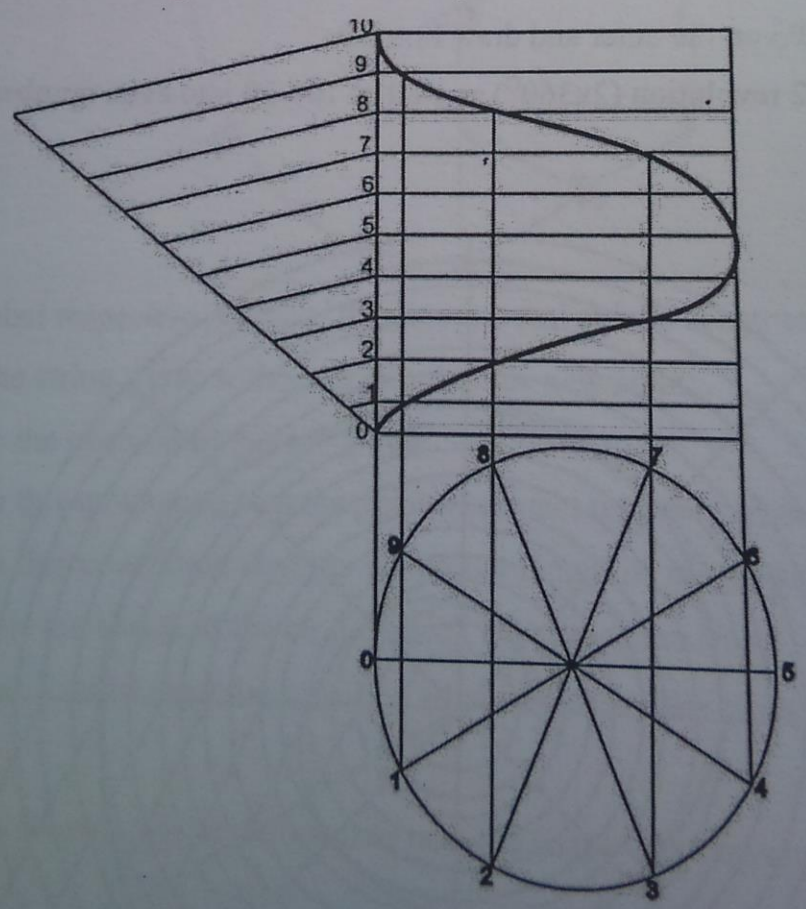

4 PROJECTION AND VIEWS

4.1 PROJECTION

4.1.1 PROJECTION

Projection can best be demonstrated by flashing the light of torchlight against an object onto a wall. This second example is function of a film- projection whereby the image on the film is cast onto a screen. From these two examples, two deductions can be made between the object and its image. The two have the

i. Same shape, and
ii. Proportional sizes i.e the size of one is a scale factor of the other.

The application of projection in technical drawing is therefore to instill the two above qualities.

Projection of an Object is any kind of presentation of the object on a paper; screen or similar surface by drawing or by photograph

Projection enables us to draw a point, line, surface or an element on a plane.

4.1.2 TYPES OF PROJECTION

For a projection to take place there is the need for the following:

i. The projectors (lines of sight)
ii. The plane(s) of projection
iii. The object, and
iv. The observer's eye, or the station point.

Projection can be classified according to the following criteria bellow:

i. Distance of the source of the projecting ray.
ii. Inclination of ray to plane of projection,
iii. Orientation of the object and
iv. Number of views required describing the object.

I. DISTANCE OF THE SOURCE OF THE PROJECTING RAY

Based on the distance of the source of the projecting ray, a projection can be termed as

i. Perspective projection (projection from a definite point)

In a perspective projection, the rays strike the plane of projection at varied angles of inclination.

ii. Parallel projection (projection from infinity)

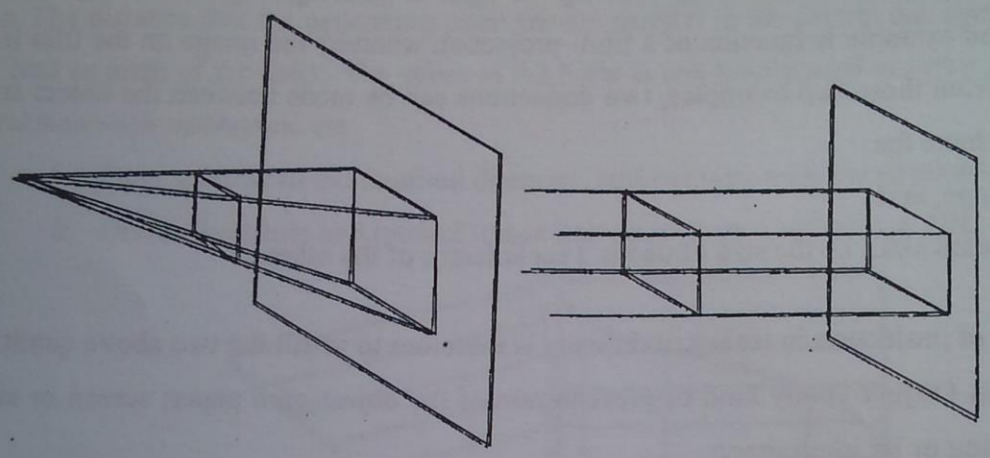

II. INCLINATION OF RAY TO PLANE OF PROJECTION

Perspective Projection:

The ray from a perspective projector has varied angle of incidence on the plane of projection. Perspective projection involves a number of projectors converging at one, two, or more vanishing points. However, depending on the height of O, there can be:

i. Normal (linear) perspective

ii. Birdseye (aerial) perspective and

iii. Worms eye perspective

Parallel Projection:

The ray can be either:

i. Inclined to the plane of projection (oblique projection)

ii. Normal to the plane of projection (orthogonal projection or orthographic projection).

This is the projection obtained on a plane when the projectors converge to a point objects at a distance appear to be smaller than those near.

III. POSITION OF OBJECT (SIDES EXPOSED TO RAY)

i. One side or a side parallel to plane of projection (I)

ii. Two sides (II)

iii. Three sides (III)

Basic Method of Projection		Name of the projection related to object: Position No			
Distance of Ray	Inclination to Projection Plane	I	II	III	IV
PERSPECTIVE PROJECTION Converging Projectors	PERSPECTIVE Normal Wormseye Birdseye Depending on 0 height of 0	PARALLEL PERSPECTIVE	ANGULAR PERSP	3-POINT PERSPECTIVE	IV not used in practice because extra tilt of object produces same view as position II, the view inertly being rotated on PP_1
ORTHOGRAHIC PROJECTIONS Parallel Projection	OBLIQUE Projectors at θ to PP_1	CAVALLIER (a) CABINET (b) PLANOMETRIC (c) CLINOGRAPHIC (d) depending on θ for (a) 45° (b) 63° 26° (c) 45° (d) 80° 32°	— Not used because object tilt has same effect as change of 6 —		
	ORTHOGONAL Projectors 1 to PP_1	Orthographic	(sometimes multiplanar)	AXONONMETRIC TRIMETRIC DIMETRIC ISOMETRIC Depending on tilt angle of object	

Perspective Projection

i. One-point perspective

ii. Two – point perspective and

iii. Three – point perspective

Oblique Projection

It is projection obtained on a plane of projection when one face of the object is parallel but the other adjacent face is inclined at an angle of 45° to the plane of projection.

i. Cavalier

ii. Cabinet

iii. Planometric

iv. Clinographic

Orthogonal Projection

i. Orthographic

ii. Axonometric

1. NUMBER OF VIEWS REQUIRED DESCRIBING THE OBJECT

Two types of projections can be identified under this criterion:

i. Single-view Projection

This type of projection provides a single view that is enough to fully describe the object. An example of a single-view projection is **pictorial projection**.

ii. Multi-view projection

A full description of an object is achieved by this projection only when more than one direction projection is done (several views taken from different directions of projection). A typical example is orthographic projection.

4.1.3 ORTHOGRAPHIC PROJECTIONS

We have identified the respective types of projections from the above topic. It is therefore good to recall the properties of orthographic projection:

i. Consists of parallel rays

ii. They rays are orthogonal to plane of projection

iii. The object is positioned such that only one side is subjected to the ray (multi-view projection)

iv. This side is also parallel to the plane of projection

Orthographic projection is of paramount importance in engineering drawing. This can be attributed to three main factors:

i. It gives the True shapes of the object

ii. It's image is proportional in size to the original object and

iii. The views it provides are inter-related (i.e. when given two views the third view can be derived and therefore provides a self-checking mechanism).

From the practical point of view, the following listed below are invariably required in projection:

i. The object to be projected
ii. The plane of projection
iii. The projectors and
iv. The observer's eye or station point

Out of the four items listed above, we would be interested in the object and plane of projection.

4.1.4 PLANES OF PROJECTION

The orientation of the plane of projection gives rise to the various names:

a. **Vertical plane (VP):** This is a plane that is vertical
b. **Horizontal plane (HP):** This a plane that is horizontal and perpendicular to the Vertical plane.
c. **Auxiliary plane (AP):** Any other plane, placed at any angle to the principal planes:
d. **Profile plane (PP):** This plane is at right angle to the two principal plane (also called auxiliary vertical plane. (PP) = (AVP).
e. **Reference planes:** In general the two vertical and horizontal planes that are employed in orthographic projection are known as reference or principal planes of projection (they give the length, breadth and height).

The views associated with these planes are:

Front view (Elevation)	VP
Top view (Plan)	HP
Side view (Side elevation)	AVP
Auxiliary view	AP

The elevation (From view) is the most important view.

4.1.5 OBJECT

The object required for orthographic projection may take one of the following forms:

i. Real physical object
ii. Be on a paper with a different type of projection e.g., Isometric projection, or
iii. Imaginary object within the mind of the designer

4.2 TYPES OF ORTHOGRAPHIC PROJECTION

A format for classifying the types of orthographic projection is based on the two principal planes (horizontal and vertical).

The intersection of these two principal planes, VP and HP, results in the creation of four quadrants.

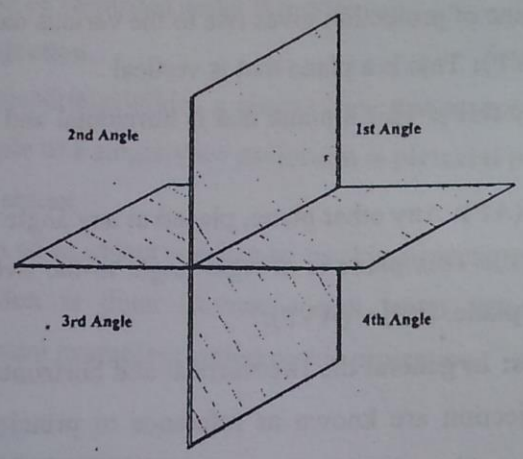

In order to obtain the principal views, the rays are assumed to come from either the top or right. The object is now placed within the respective planes of projection:

First Quadrant:

i. Elevation: is obtained by direct projection onto the VP.

ii. Plan is obtained by indirect projection onto the HP

Second Quadrant:

i. Elevation: is obtained by indirect projection onto the VP

ii. Plan is obtained by direct projection onto the HP

Third Quadrant:

i. Elevation: is obtained by indirect projection onto the VP

ii. Plan is obtained by indirect onto the HP

Fourth Quadrant:

i. Elevation: is obtained by direct projection onto the VP

ii. Plan is obtained by indirect projection onto the HP

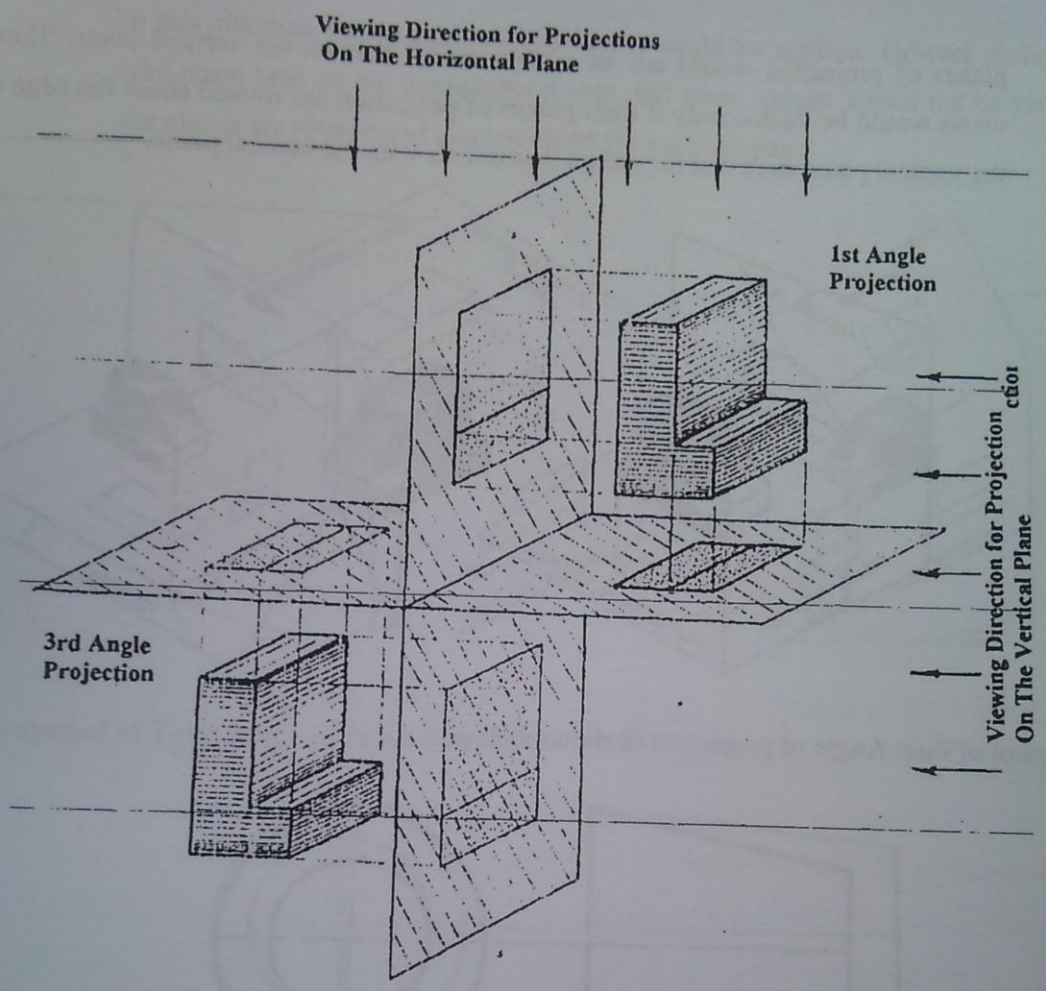

From the above observation, some quadrants do have uniform projections (either direct or indirect) where as others have non – uniform of projections (both direct and indirect). The type of orthographic projection is based on the uniform forms of projection. It can therefore be deduced that:

i. Uniform Direct Projection occurs within the first quadrant and this type of orthographic projection is called the 1st Angle Projection.

   This is as a result of the object being placed between the plane of projection and the source of projections. The plane of projection is opaque and the ray does not pass through the plane.

   The opaque box theory can be applied here, whereby the object within this opaque box could not be projected until it is cut opened. The resulting views on the respective

planes of projection would not be visible except that on the vertical plane. These views would be visible only if their planes of projection are rotated about the edge of the vertical plane such that they align themselves with the vertical plane.

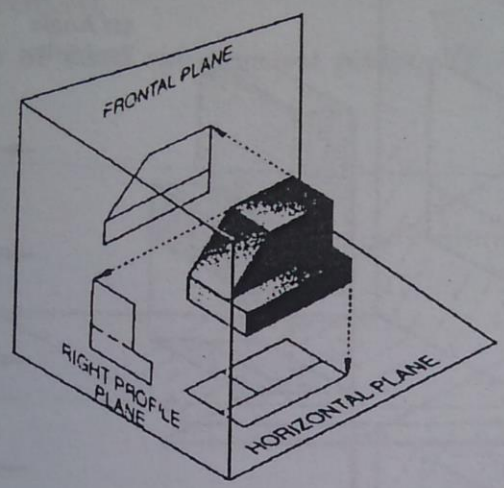

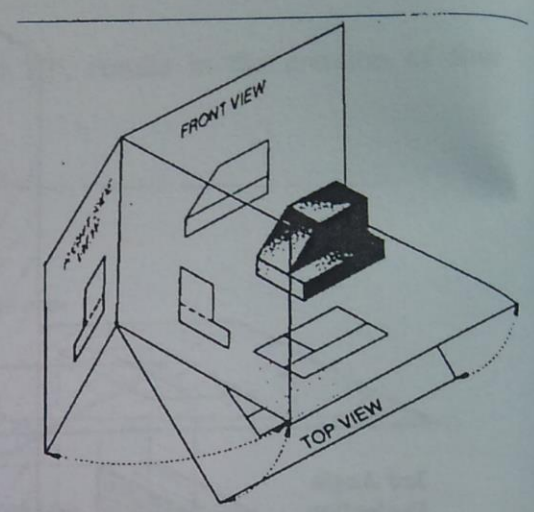

The symbol of First Angle of projection is shown below:

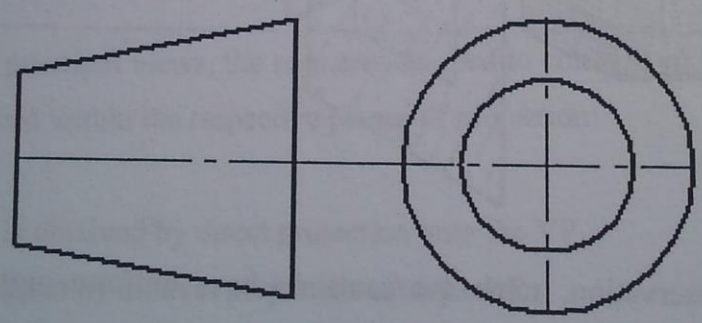

ii. Uniform Indirect Projection occurs within the third quadrant 2nd Angle Projection. The plane is in front of the object and the object cannot be seen, but it can be seen if only we assume the plane to be transparent. Or we assume that the ray goes this transparent plane, hits the object and reflects onto the transparent plane. This times the image of the object and reflects onto the transparent plane. This time the image of the object is placed on the plane of projection.

In this situation the transparent box theory could be applied. Indirect projection can take place here on the transparent planes, but these images would not be visible until the planes are rotated and aligned about the vertical plane.

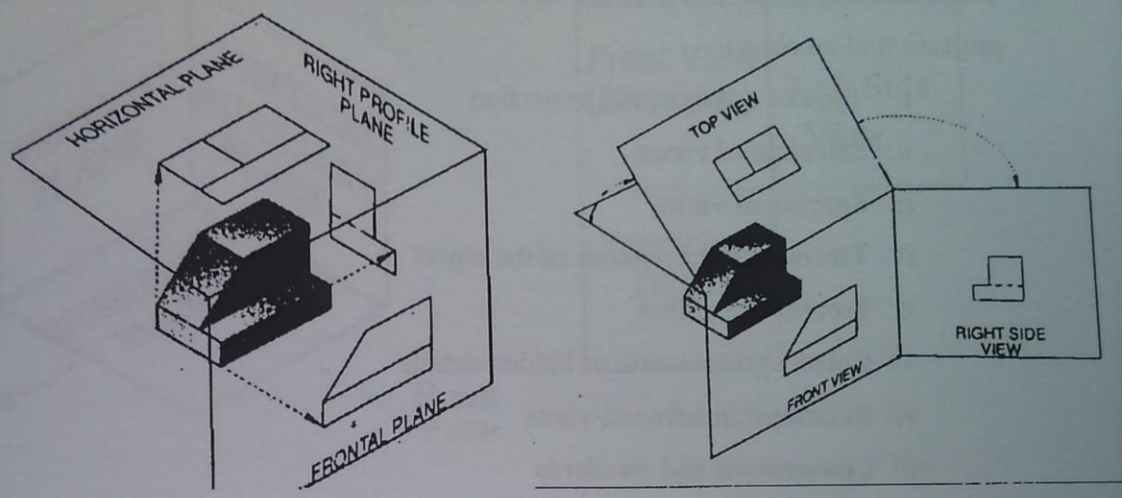

The symbol of Third Angle of Projection is shown below:

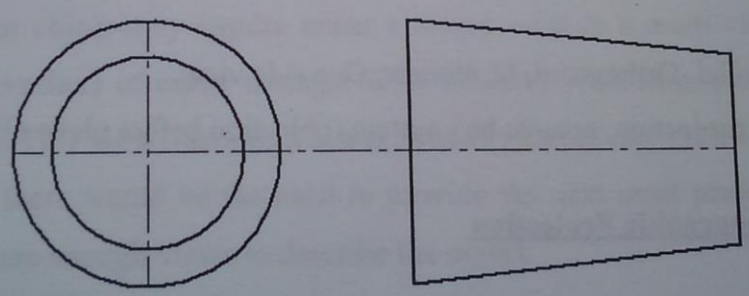

Due to the presence of these two types of projections, various countries have adopted one form of thee projection as a standard.

Example:

First angle	**Third angle**
European standard	USA standard
E.g. Britain, Germany	E.g. Japan, USA

4.2.1 ORTHOGRAPHIC PROJECTION OF AN OBJECT

The following steps listed below are recommended to enable one produce an orthographic projection of an object:

i. Type of orthographic projection
ii. Selection of views
iii. Spacing of views
iv. Tracing out the contour of the object
v. Precedence of line
vi. Correct presentation of hidden details
vii. Relationship between views
viii. Conventions and standards

I. TYPES OF ORTHOGRAPHIC PROJECTION

First Angle Orthographic Projection

Properties:

Orthographic: Parallel, Orthogonal, Multiview, One side view,

First Angle: direct projection, opaque box system (objection before plane of projection)

Third Angle Orthographic Projection

Properties:

Orthographic: Parallel, Orthogonal, Multiview, One side view,

Third Angle: Indirect projection, transparent box system (object behind plane of projection)

For reasons of standards, we will adapt the First Angle Projection. This implies that the object is placed before the plane of projection and directly projected onto this plane. The object is therefore placed within open cuboids and the views required are projected onto the respective planes whereby:

a. The Vertical Plane (VP) is fixed, and
b. The other planes (e.g. HP, AVP, etc.) are rotated to come in line with the Vp

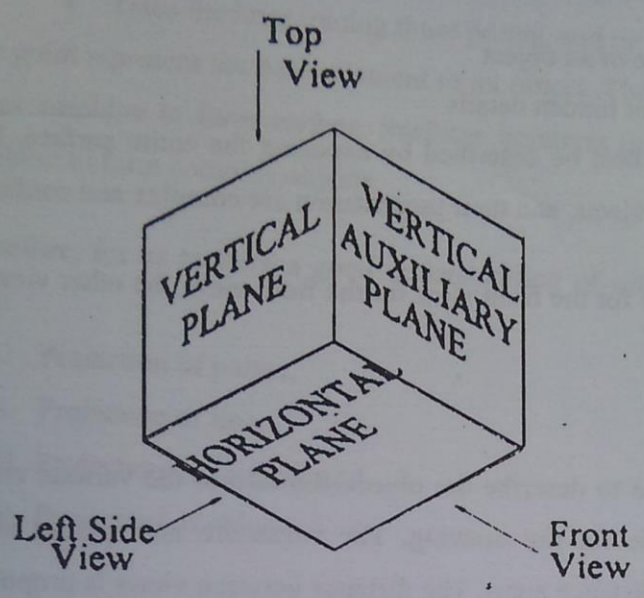

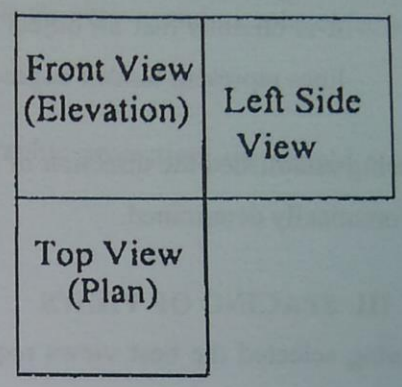

II. SELECTION OF VIEWS

The projection of an object may require either a single view or a multi-view. The **First View (front view or Elevation)** of either a single view or multi-view should be the view that best describes the object. This view, therefore, is a reference view. If that view is not enough to fully describe the object there would be the need to provide the next most preferential view. This is repeated until there are enough views to describe the object.

When converting a pictorial view of an object into orthographic views, an arrow generally indicates the direction from which the object is viewed for its front view. In the absence of an arrow or where the object is physically present, the selection of the best view (e.g. The Front View) may be based on the following rules:

i. The rule of the most natural position

   Human beings, tables, chairs drawn upright on their legs are easily recognized, than with their legs up.

ii. The rule of stability

   A cone should not be drawn with the apex up, except for other reasons.

iii. The rule of the longest side.

The rule favors the largest surface of an object

iv. The rule of minimum dash lines or hidden details

It is obvious that an object can best be described by exposing the entire surface. Dash lines represent hidden edges of objects, and their presentation are complex and confusing.

Having established the direction of view for the front view for the front view, the other views are automatically determined.

III. SPACING OF VIEWS

Having selected the best views required to describe the object, the size of the various views is considered based on the intended scale for the drawing. The views are now placed at their respective positions, but at reasonable distance apart. The distance between views is proportional to the size of the views.

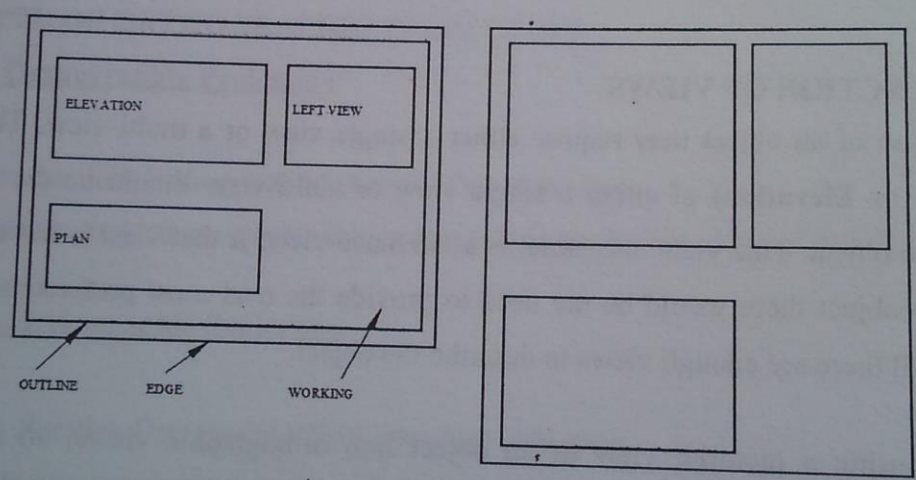

When a large sheet is used for the views of several objects the sheet should be divided into several working fields. The division should not be with a pencil or pen, but is related to the space between the fields. Each working field is to contain the views of a single object. These free spaces between these fields should be wider than the free space between views.

IV. TRACING OUT THE CONTOUR OF THE OBJECT

The shape and size of an object are obtained in projection by tracing out its contour onto the plane of a paper based on the scale. The contours of an object are the edges, which are represented by lines. To achieve tracing the contour one will have to:

- Determine and project these important point,
- Trace the lines joining these points, and or

The point represent the basic element of an object. The point combine to form line or edges. The edges combine to form surface. Surfaces combine to form an object, and simple objects may combine to form complex objects.

Therefore, for us to have a good understanding of orthographic projection, we should start off with:

i. Projection of points,
ii. Projection of line,
iii. Projection of surfaces and
iv. Projection of objects.

Projection of Line

a. **Horizontal line** (i.e. parallel to both horizontal and vertical planes)

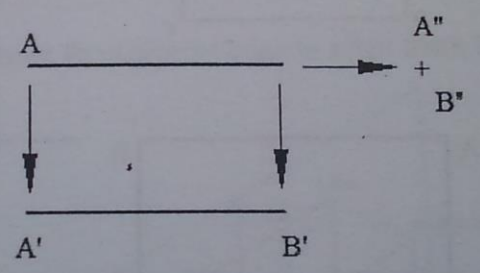

b. Vertical line

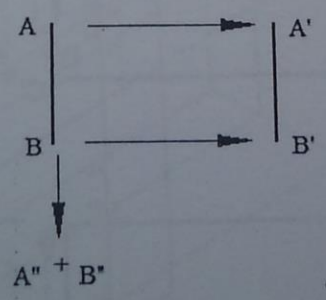

c. Inclined line (but parallel to vertical plane)

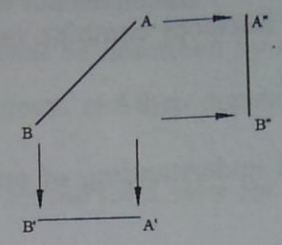

Projection of a Plane

a. Horizontal plane

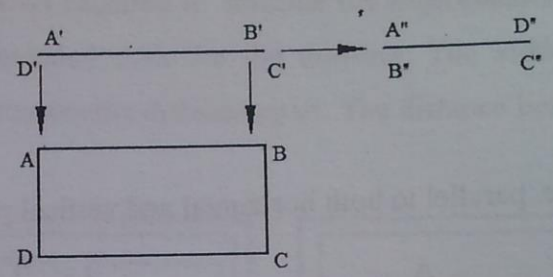

b. Vertical plane

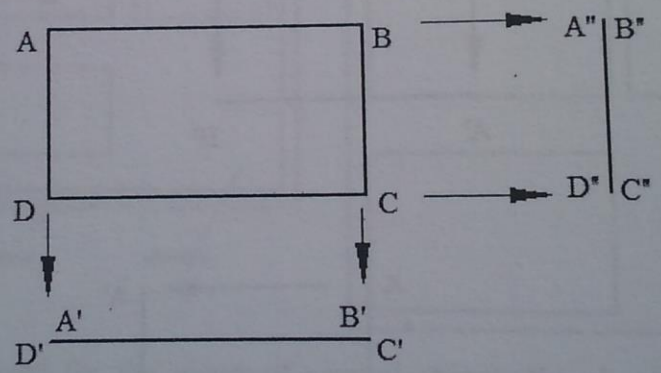

c. Inclined plane

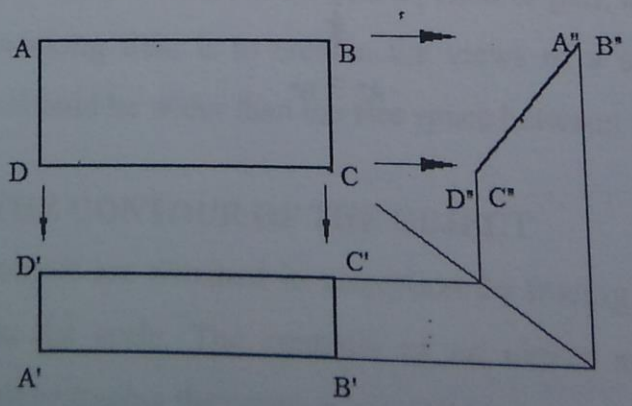

Example:

The block is placed within an opaque box with the sides to take up the best projections provided. The arrow E indicates the direction of projection. The important vertices (points) are number, and these points are projected onto the respective planes of projection. The contours (edges) of the object are traced out on the planes.

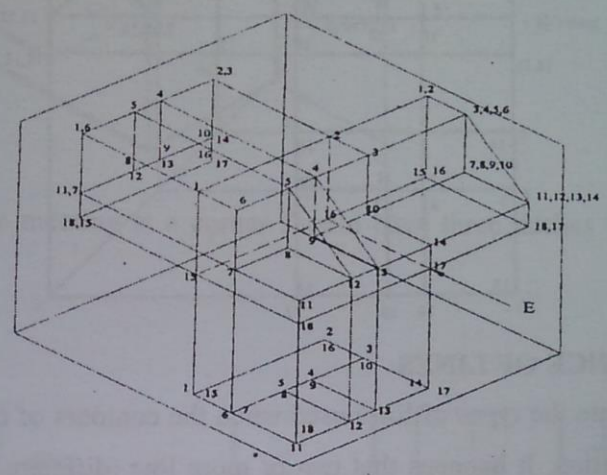

The other two views are rotated about the adjacent edge to align them to the vertical plane.

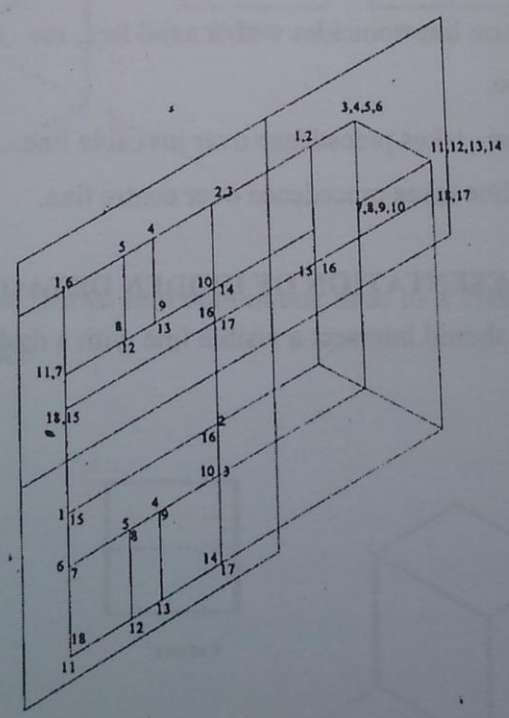

The resulting projection is finally shown below placed in the rightful orientation of the corresponding planes of projection.

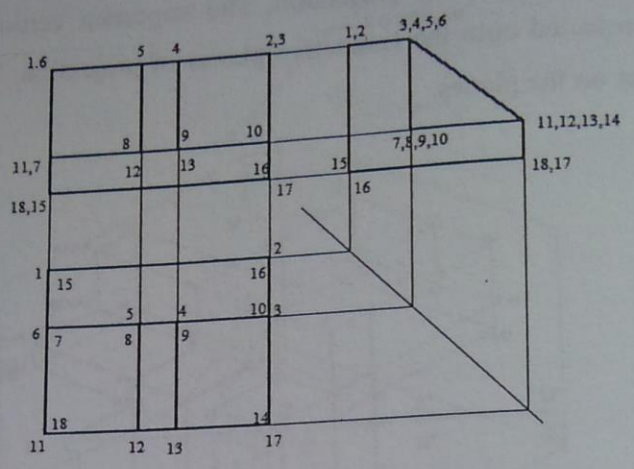

V. PRECEDENCE OF LINES

It is important to note the types of lines used when the contours of the object are projected onto the planes of projection. It happens that two or more line (different or the same line types may coincide and the question of the line that takes precedence becomes important.

- When a centre line coincides with a solid line, the solid line takes precedence over the centre line.
- A visible line takes precedence over invisible line.
- An invisible line takes precedence over centre line.

VI. CORRECT PRESENTATION OF HIDDEN DETAILS

i. An invisible line should intersect a visible line with a dash in contact,

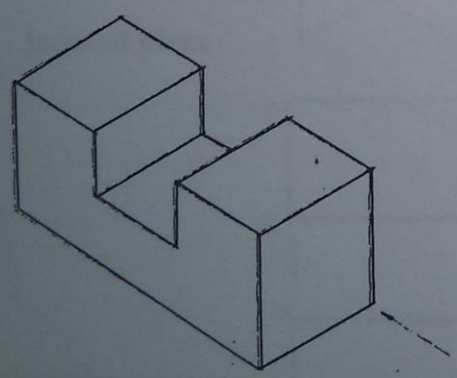

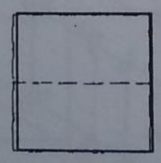

Correct

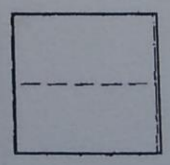

Wrong

ii. An invisible line should intersect another invisible line at crossing point of two dashes in contact

iii. Invisible lines meeting at a corner should have two dashes meeting at their end points.

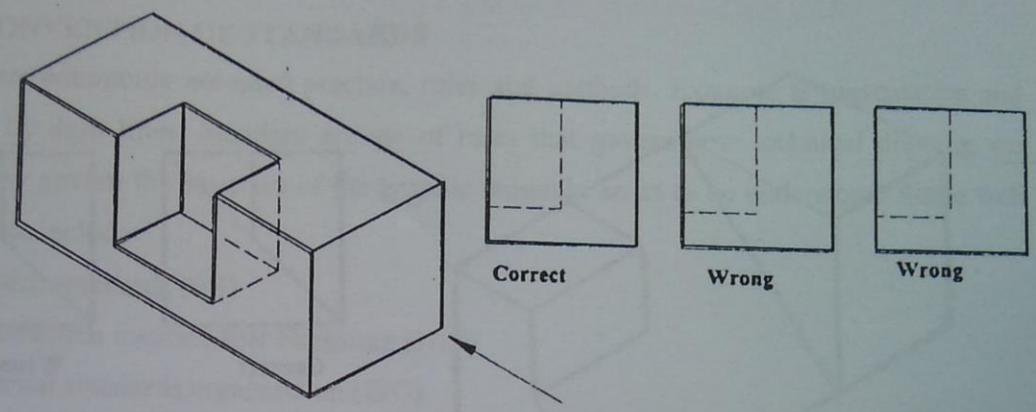

iv. Three invisible line meeting at a corner should have three dashes meeting at their end points.

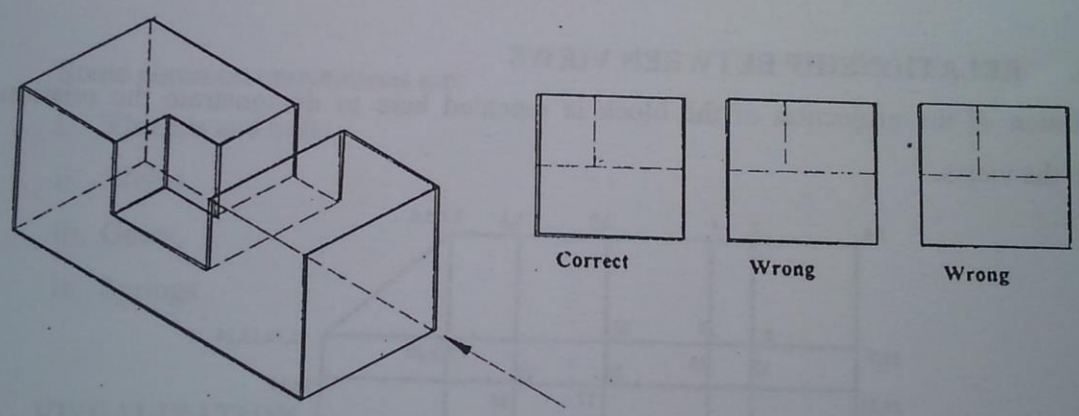

v. An invisible line can be shown as a continuous lines of a visible line. The invisible line should begin with a space

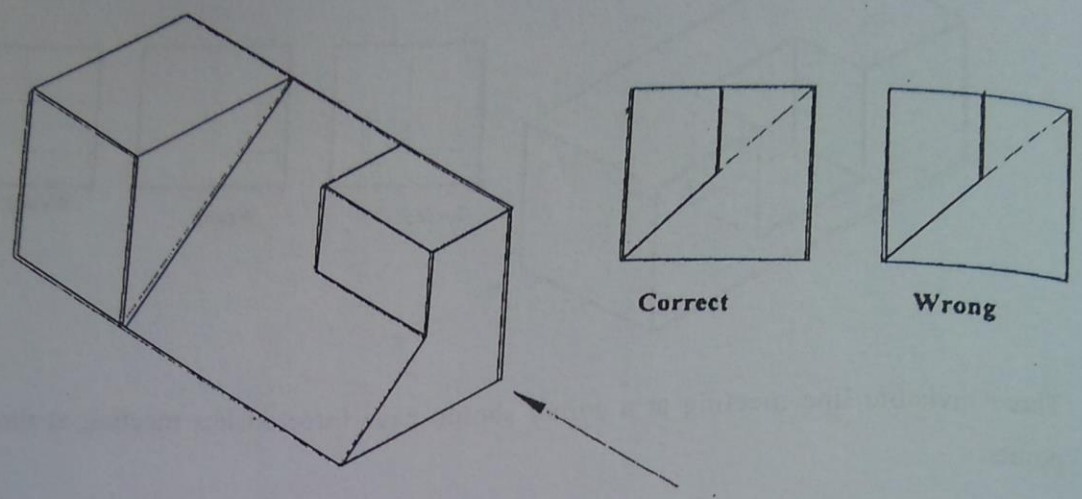

VII. RELATIONSHIP BETWEEN VIEWS

The solution of the projection of the block is repeated here to demonstrate the relationship between the views.

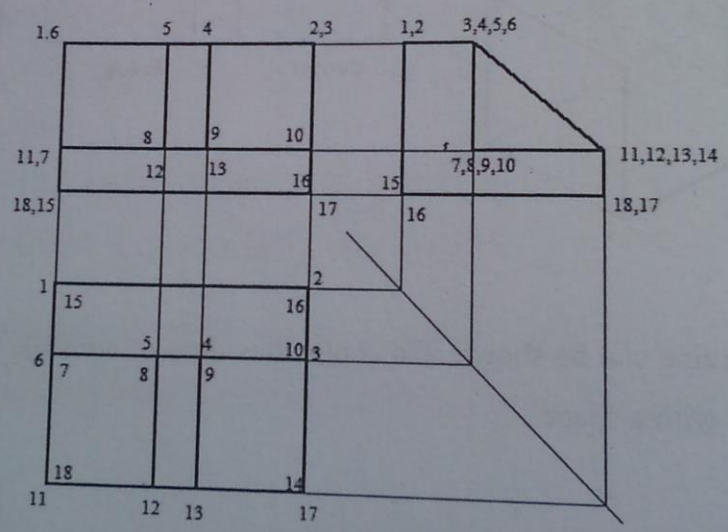

Based on a point selected (point 1), it could be deduced that its corresponding images on the elevation, top-view and left-side view show the following:

i. Its images on the elevation and left-side view are horizontally linked

ii. Its images on the elevation and on the top view are vertically linked and

iii. A 45°C inclined line links its images on the left-side view and the top view

VIII. CONVENTION OF STANDARDS

Conventions are commonly accepted practice, rules and methods. Example is presentation and hidden edges by dash lines. Standard are set of rules that govern how technical drawing are represented they govern the structure of the graphic language so as to be understood. Some well known standards include:

i. British standards (BS)
ii. Deustschen institute fuer Normung (DIN)
iii. Internal standards organization (ISO)
iv. Japanese standards (JIS), etc.

Standard and convention are time bound and they have evolved over the years and are still changing as new technologies do affect how the graphic should be presented.

Some common conventions are:

i. Threads and bolts
ii. Welds
iii. Gears,
iv. Springs

4.2.3 VISUALIZATION

Visualization is the mental understanding of visual information. The ability of visualize greatly enhance the speed and accuracy with which drawing can be done. Visualization can explain primarily through exercise. Sketching techniques are the primary vehicle through which one can develop and use visualization skills. Other method using other materials can be explored.

Perception is the processes our mind use to decode visual information. For example your brain manages the navigation as you walk to the lecture halls. Engineers to solve problems can put this natural visualization ability in more structured ways. To effectively use drawing as a vehicle for visualizing design ideas, use must understand that the two-dimensional drawings are a presentation of information existing in another form. The mind processes and interprets the visual information and controls the muscles holding the pencil.

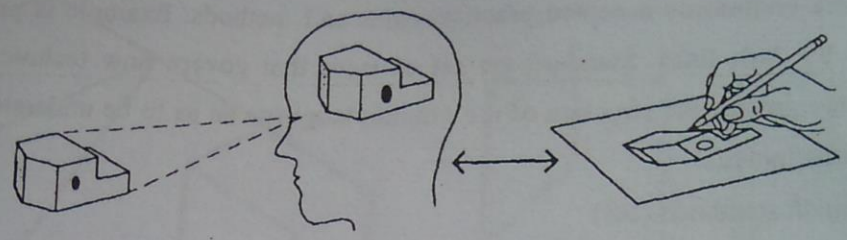

The first visualization techniques treat objects as would normally be seen and felt. Solid objects reveal features of the objects. The simple objects shown below consist of surfaces. The surfaces in turn consist of lines or edges.

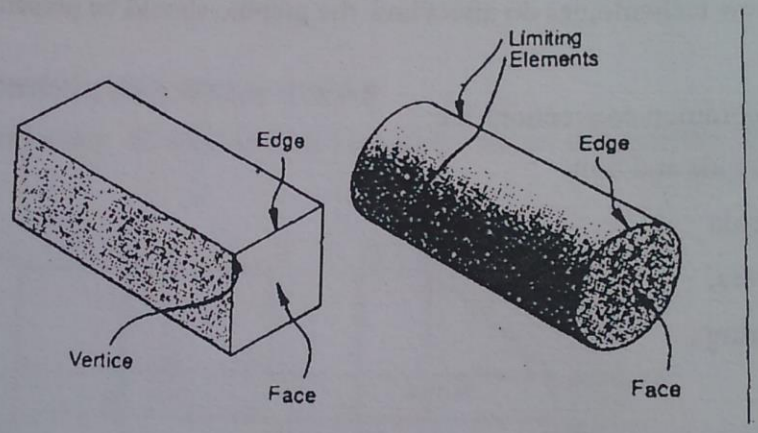

Symmetrical and non-symmetrical nature of the solid object must also be considered. The next technique of visualization is the combination or subtraction of simple objects (positive or negative) to obtain complex objects. A flat face of one object must join a flat face of the other. And this could take place in the middle or form the corners.

Subtraction technique:

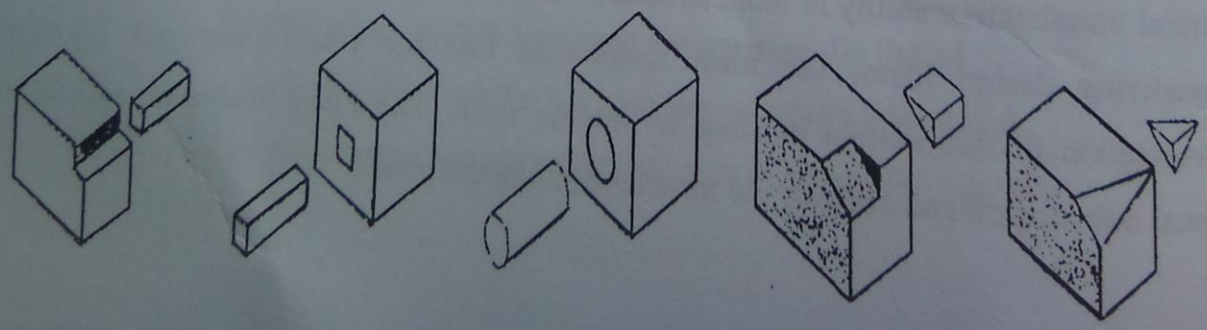

Subtraction and Addition techniques can be used to obtain complex geometric forms.

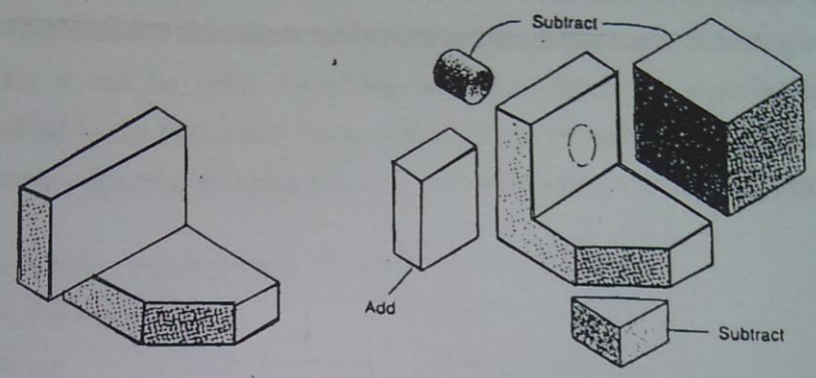

4.3 VIEWS

4.3.1 MISSING VIEWS

To obtain the projection of the missing view, the following principle should be considered:

1. Projection of objects,
2. Projection of surfaces,
3. Projection of lines and
4. Projection of points.

It is quite obvious that the missing view can be easily provided if the image of the object can easily be made out. However, if the image is not possible to make out, the following steps should be followed:

i. Identify the views correctly (e.g. Plan, elevation etc.),

ii. Note the relationships between the views when projects are made from one view to the other ($45^{O}C$, horizontal, vertical).

iii. Provide arrows on each view showing how the direction of view linking the two views provided.

iv. Select one of the views, label the visible surfaces on the view and note the order of visibility of the surfaces (This is based on the direction of the arrows on that view),

v. Select the most visible surface on the view selected and determine the surface in the other view noting its orientation,

vi. Taking the two views and the orientation of the surface(s), can the image of the object be obtained?

vii. If NO, repeat from step v,

viii. If YES, provide the missing view

Example

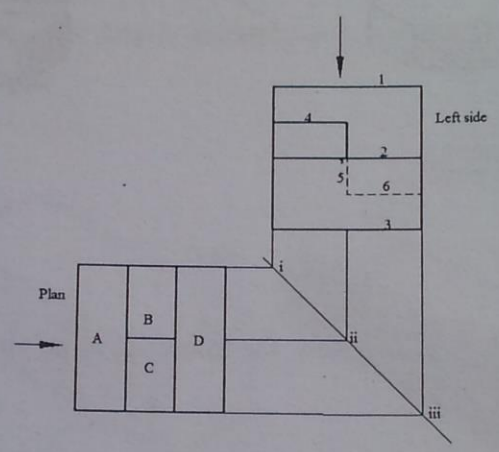

The plan is selected and the resulting visible surfaces are A, B, C, and D. The surface A is the most visible surface while D is the lest visible in the Left Side view. The surface A is therefore selected and it is bounded by the ray I and III:

Plan (surface A is rectangular)	***Left side***
i. Horizontal	Horizontal line
ii. Forward/backward (F/B) inclined	An inclined line
iii. Left/ right (L/R) inclined	Rectangular

i. With the assumption that a is horizontal implies that the area can be lines 1, 2 or 3. Line 3 cannot be the surface A, because the surface must have a thickness. A cannot be 1, because that will predict that the surface A is the top-most surface and this surface will therefore obscure the other surfaces. This is not the case because some of the other surfaces are visible in the side view.

ii. With the assumption that A is F/B-inclined is not possible, because there is neither an inclide solid nor dash line.

iii. With the assumption that A is L/R-inclined implies that the area can enclosed by: lines 1 & 2, or lines 2 & 3. It cannot be within lines 1 & 2, because the Left view shows additional information that says there is a rectangular surface on A. Lines 2 & 3 satisfy.

Therefore, surface a can be either horizontal or L/R-inclined (i.e. right-inclined). If this information is added to the two initial views provided and the image of the object is still not clear, then the above steps must be repeated.

The surface B is therefore selected and it is bounded by the rays I and II.

Plan (surface B is rectangular)	***Left side***
i. Horizontal	Horizontal line
ii. Forward/backward (F/B) inclined	An inclined line
iii. Left/ right (L/R) inclined	Rectangular

i. With the assumption that B is horizontal implies that the area can be line 4.

ii. With the assumption that B is F/B-inclined is not possible, because there is neither an inclined solid or dash line.

iii. With the assumption that B L/R-inclined implies that is can be enclosed by: lines 4&2 Therefore, surface B can be either horizontal or L/R-inclined (i.e. right-inclined). If surface A and B are both inclined then they must form a single L-shaped surface. This is not the case, therefore the inclined and horizontal aspect must alternate (i.e. Horizontal A goes with inclined B, and inclined A goes with horizontal B. If this information is added to the two initial views provided and the image of the object is still not clear, then the above steps must be repeated. If the object is clearly perceivable, sketch the pictorial view of the object. From the sketch, provide the missing view.

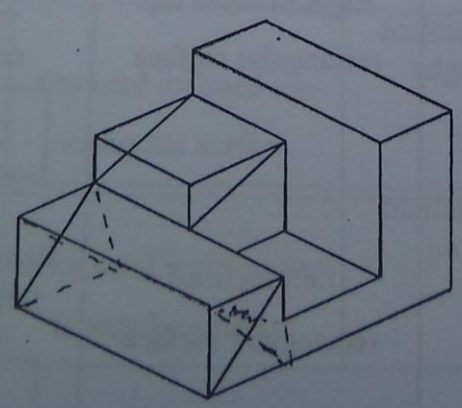

Example 2

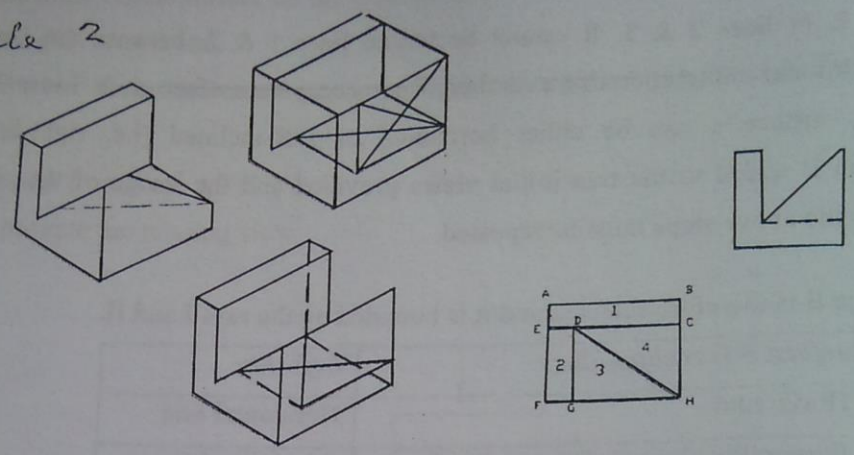

Object	View selected =Plan	Assumption	Other view = left side	Confirmation ?
2	Rectangular top surface	Horizontal rectangular top surface	Horizontal line	Yes, but hidden. Therefore no.
2		Forward inclined top rectangular surface	Inclined line with edge F-G up	Yes
2		Backward inclined top rectangular surface	Inclined line with edge F-G up	No
2		Right inclined top rectangular surface	Visible Rectangular surface with edge D-G up D G	No
2		Left inclined rectangular surface	Visible Rectangular surface with edge E-F up E F	No

2		Diagonal inclined rectangular surface	Parallelogram	
1	Rectangular top surface	Horizontal rectangular top surface	Horizontal line	Yes
1		Forward inclined top rectangular surface	Inclined line with edge E-C up	No
1		Backward inclined top rectangular surface	Inclined line with edge A-B up	No
1		Right inclined top rectangular surface	Visible Rectangular surface with edge B-C up B C	No
1		Left inclined rectangular surface	Invisible Rectangular surface with edge A-E up A E	No
1		Diagonal inclined rectangular surface	Parallelogram	No
3	Triangular to surface	Horizontal Triangular top surface	Horizontal line	Yes (hidden)
3		Forward inclined top triangular surface	Inclined line with edge G-H up	Yes
3		Backward inclined top triangular surface	Inclined line with point-D up	No

3		Right inclined top triangular surface	Triangular surface with point-H up 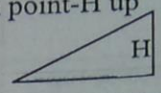	Yes
3		Left inclined triangular surface	Triangular surface with edge D-G up 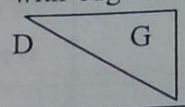	No
3		L- Diagonal inclined triangular surface	Triangular surface with point G up 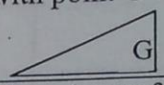	Yes
3		R- Diagonal inclined triangular surface	Triangular surface with edge D-G up 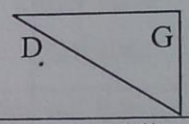	No
4	Triangular 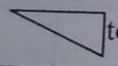 top surface	Horizontal Triangular top surface	Horizontal line	Yes (hidden)
4		Forward inclined top triangular surface	Inclined line with point H up	Yes
4		Backward inclined top triangular surface	Inclined line with edge D-C up 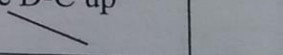	No
4		Right inclined top triangular surface	Triangular surface with edge C-H up 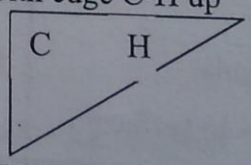	No
4		Left inclined triangular surface	Triangular surface with point C up	No
4		L- Diagonal inclined triangular surface	Triangular surface with point C up 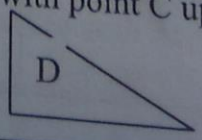	No

4		R- Diagonal inclined triangular surface	triangular surface with edge D-H up 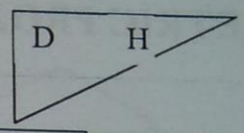	No

1	2	3	4	Comment
H	F	H	H	Two adjacent horizontal surfaces form a single surface.
H	F	H	F	Two adjacent forward inclined surfaces form a single surface.
H	F	F	H	Two adjacent forward inclined surfaces form a single surface.
H	F	F	F	
H	F	R	H	
H	F	R	F	
H	F	L-D	H	
H	F	L-D	F	

5 AXONOMETRIC PROJECTION

Axonometric projection is a single view project obtained on a plane of paper when the projectors are perpendicular to the plane and parallel to each other.

The following axonometric projections are worth noting:

1. Isometric deals with one scale (iso = equal, metric = measurement).
2. Dimetric deals with two scales.
3. Trimetric deals with three scales.

In this session however, we shall be dealing with Isometric projection.

5.1 ISOMETRIC PROJECTION

5.1.1 ISOMETRIC PROJECTION

Unlike orthographic projection, isometric projection is simple to understand. It is the view obtained on a plane when the object is so placed that all the three axes make equal angle with plane of projection. This projection is pleasing to the eyes than oblique perspective projection, as it is easier to draw because all edges are foreshortened equally (one scale).

5.1.2 POSITIONING OF AN OBJECT DURING ISOMETRIC PROJECTION

i. place a cube on the horizontal plane

ii. Rotate a cube $45^{O}C$

iii. Tilt the cube either forward or backward ($35^{O}C$ 16) until the three meeting edges at te nearer corner are equally inclined to the plane of projection.

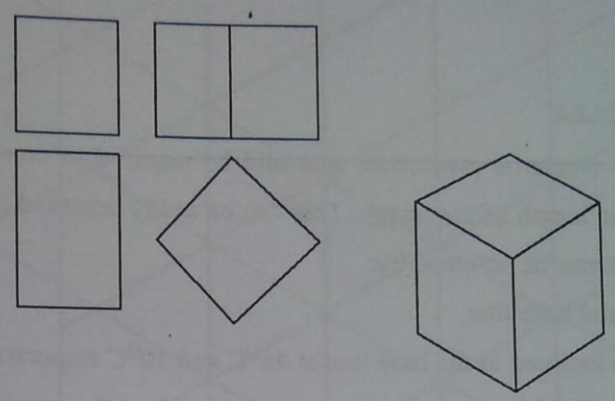

5.1.3 ISOMETRIC LENGTH

Considering the top surface of the cube (rhombus):

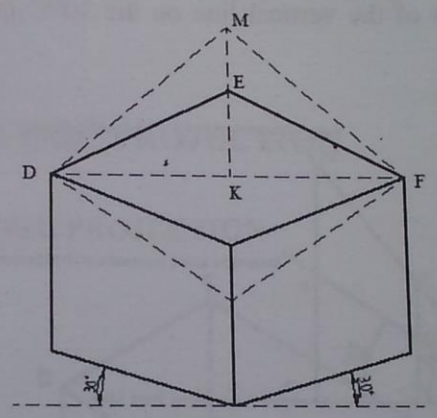

The edges of the top surface are inclined to the plane of projection and as a result of the their lengths are foreshortened. The true length of an edges is DM whereas its isometric length is DE. The diagonal DF is however parallel to the plane of projection and its length is not affected.

The ratio of the isometric length to the true length is:

$$\frac{Isometric\ length}{True\ length} = \frac{DE}{DM}$$

$$Cos\ 30^o = \frac{DK}{DE} = \frac{\sqrt{3}}{2}$$

$$\Rightarrow \frac{DE}{DM} = \frac{DE}{DK} * \frac{DK}{DM} = \frac{2}{\sqrt{3}} * \frac{1}{\sqrt{2}} = \frac{\sqrt{2}}{\sqrt{3}} = 0{,}8165 \cong 0{,}82$$

$$\text{Cos } 45^{O}\text{C} = \frac{DK}{DM} = \frac{1}{\sqrt{2}}$$

5.1.4 ISOMETRIC SCALE

To obtain an accurate isometric projection, it would be required to convert true length of the objection into isometric length of the image. This can be easily achieved if the isometric scale is made use of. This scale can be obtained by:

i. Draw a horizontal base line,
ii. Draw two lines inclined to the base line at 45°C and 30°C respectively,
iii. On the 45°C inclined line construct the distance on it at the required scale (e.g. full size or reduced size), and
iv. Draw a vertical through the magnitude of the length on the 45°C line
v. The intersecting point of the vertical line on the 30°C inclined line gives its isometric image length.

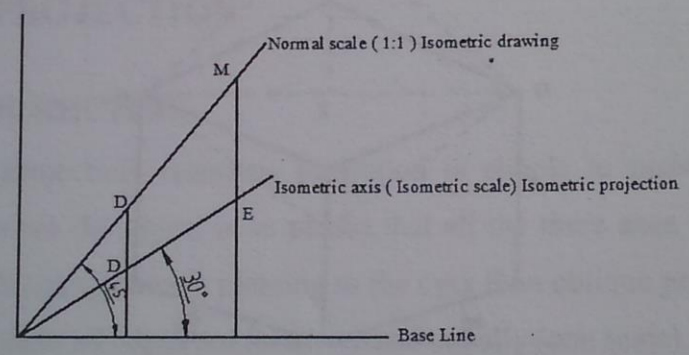

Truly speaking, isometric projection is when the isometric scale is used on the isometric axes. But since the isometric axes have the same scale, the normal scale (1:1) could be used. Strictly speaking, when the normal scale (1:1) is used for the isometric axes then the projection obtained is isometric drawing.

5.1.5 ISOMETRIC SHEET (GRAPH)

The isometric graph sheet has its axes corresponding to the isometric axes i.e. either vertical or inclined to the horizontal at 30°.

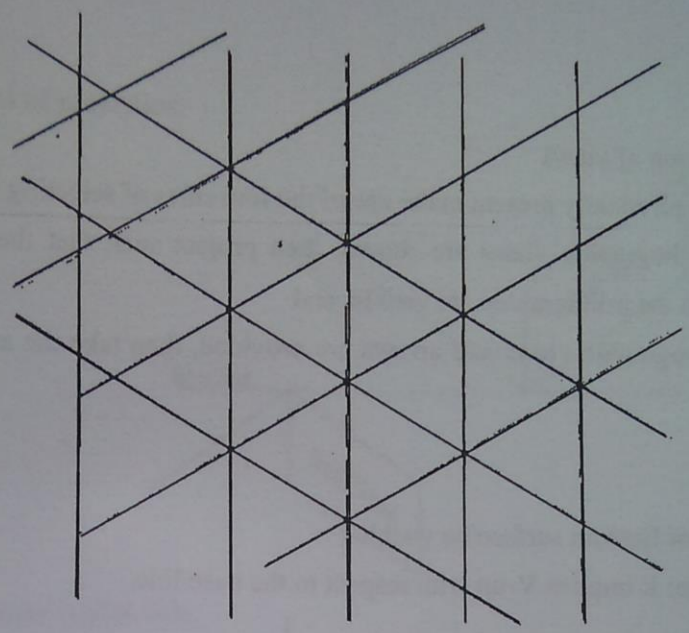

5.2 THEORY OF ISOMETRIC PROJECTION

5.2.1 THEORY OF ISOMETRIC PROJECTION

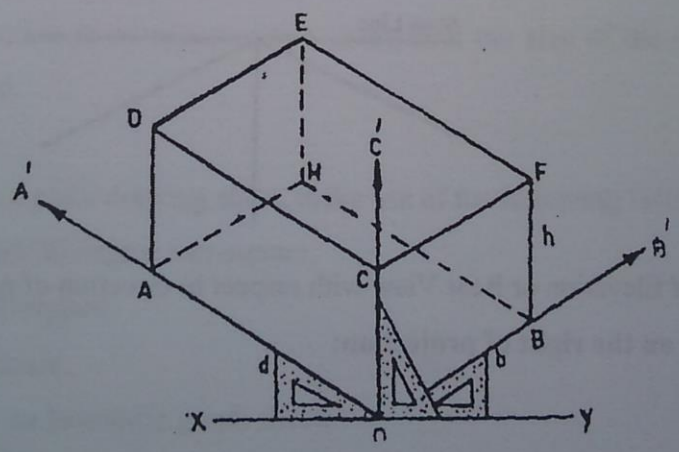

Terms:

- Isometric axes correspond to the three lines OA, OB, and OC meeting at the point O and making an angle of 120OC
- Isometric lines are lines that are parallel to the isometric axes,
- Non-isometric lines are lines that are not parallel to the isometric axes, and
- Isometric planes are surfaces of objects parallel to the isometric planes.

Orientation (direction of view)

i. If object is physically present make use of the four rules of selecting views
ii. If there orthographic views are shown, then project such that the three sides (views) provided in the orthographic are visible, and
iii. If two orthographic views and arrows are provided, then take the arrows as direction of viewing.

Considerations:

1. Must Top or Bottom surface be visible?

   Top visible: It implies V-up with respect to the base line.

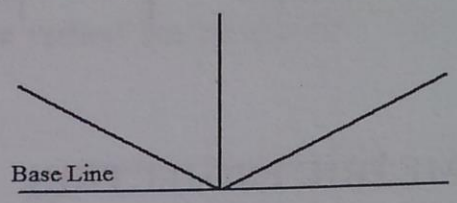

   Bottom visible: It implies V-down with respect to the base line.

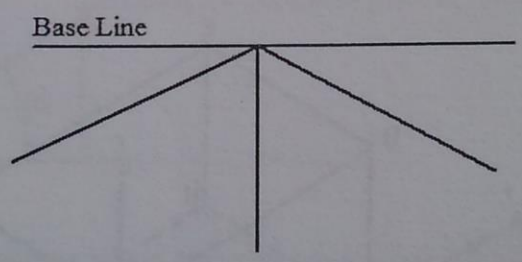

2. Position of Elevation or Rear View with respect to direction of projection.

   Elevation on the right of projection:

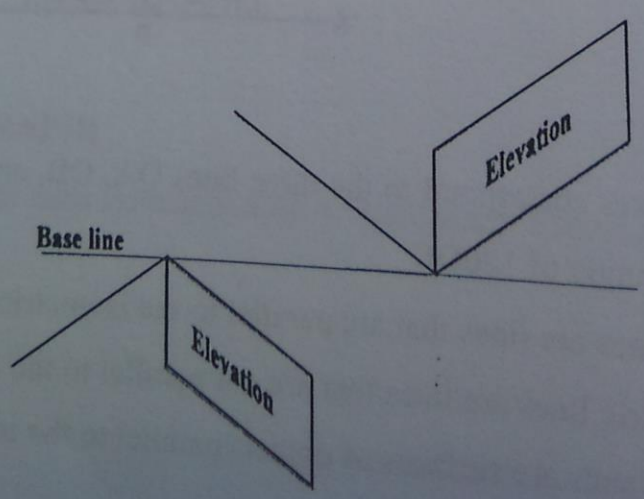

Rear view on the right of projection

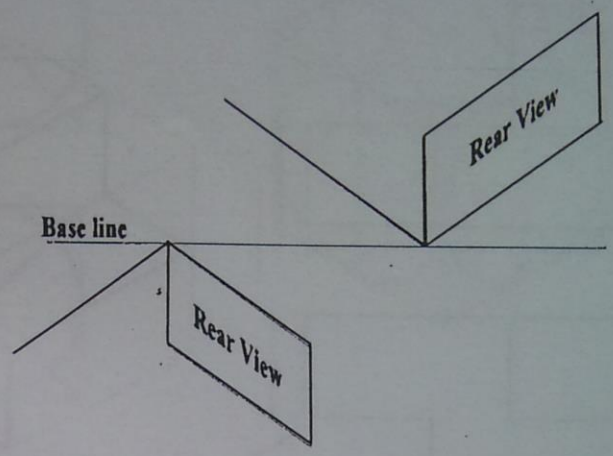

3. Provide the other visible side.

Dimensions

i. If the object is physically present, then measure the lengths required,

ii. Orthographic views of object is provided:

1. Scale
2. Dimensions directly provided,
3. If projection is on square graph sheet, then the size of the unit length must be specified.

Drawings

i. Drawing on a plain drawing sheet, make use of the following instruments:

60/30 degree sets-square,

T-square

Scale

ii. Drawing on an Isometric graph sheet:

Unit length must be considered

Objects:

i. Objects with isometric lines

Objects with all edges or lines parallel to the isometric lines are called objects with isometric lines. Typical example are cubes, rectangular prisms and combination of these.

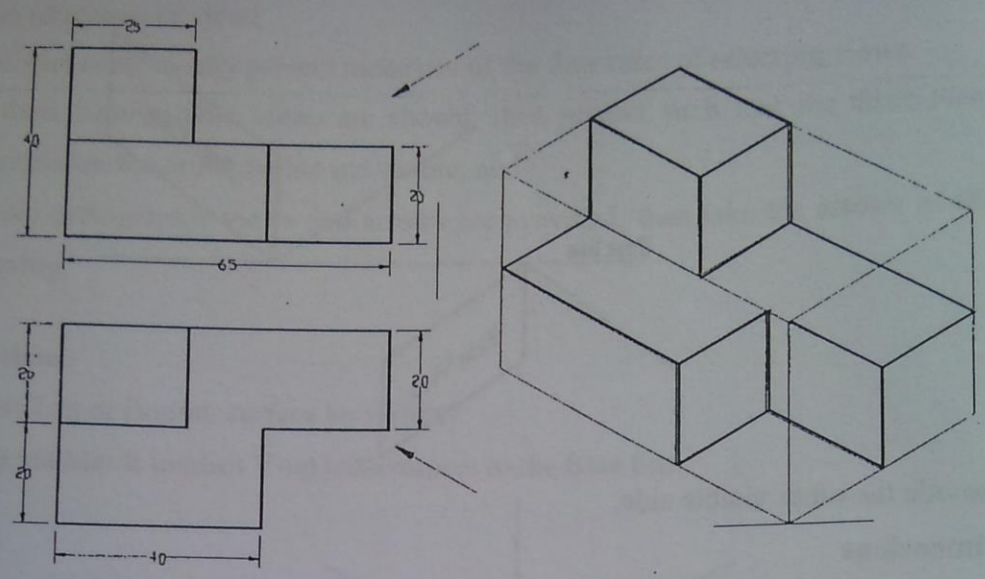

Objects with non-isometric lines

Objects with edge or line not parallel to the isometric axes are called objects with non-isometric lines. Examples are pyramids, frustum of pyramids etc.

Enclosing the objects in square or rectangular prisms can isometrically project such objects.

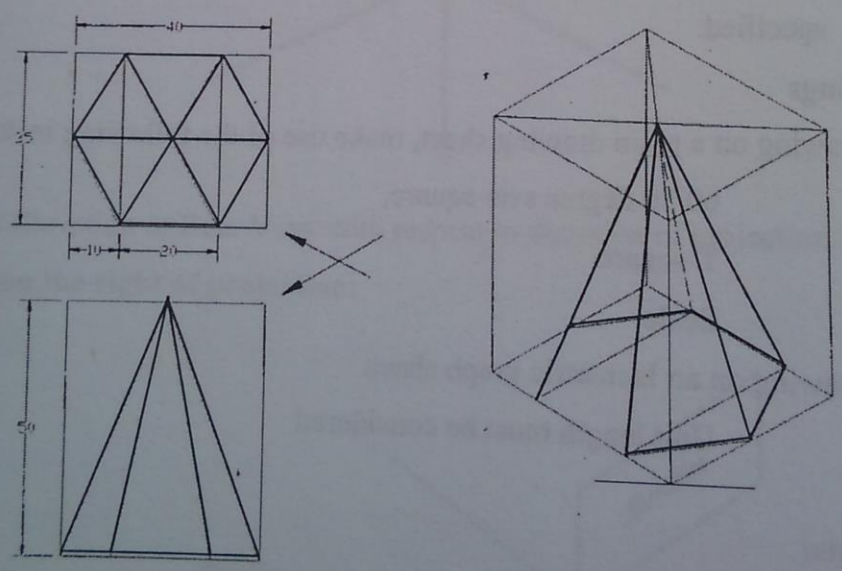

ii. Objects with circular or curved surfaces

These are object with curved or circular surfaces and such objects include circle, irregular curves, circular discs, slots, spheres, etc.

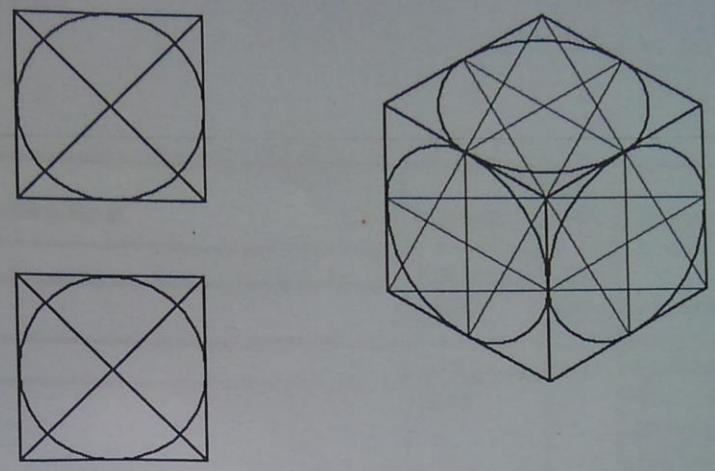

Cylinder

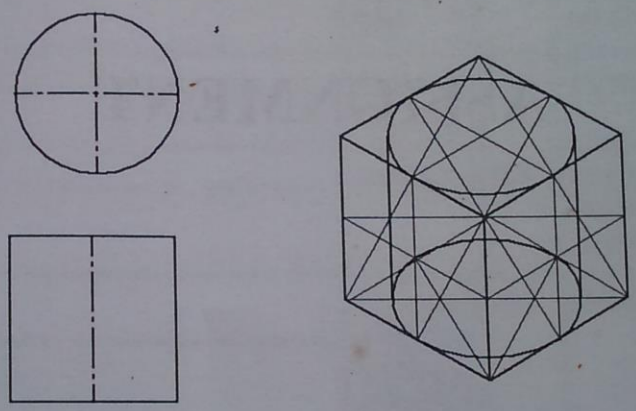

Curved

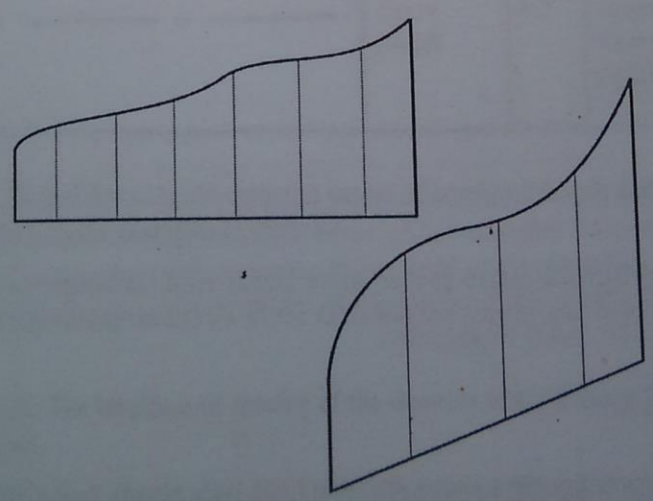

ASSIGNMENT

Two thicknesses of line are recommended: Table A1 showing their applications, thicknesses and proportion

Tabl A1. Types of line

Example (letters refer to Fig. 6)	Type of line	Line width	Example of application
A	Continuous (thick)	mm 0.7	Visible outlines and edges
B	Continuous (thin)	0.3	Fictitious outlines and edges Dimension and leader lines Hatching Outlines of adjacent parts Outlines of revolved sections
C	Continuous irregular (thin)	0.3	Limits of partial views or sections when the line is not an axis
D	Short dashes (thin)	0.3	Hidden outlines and edges
E	Chain (thin)	0.3	Centre lines Extreme positions of moveable parts
F	Chain (thick at ends and at changes of direction, thin elsewhere)	0.7 0.3	Cutting planes
G	Chain (thick)	0.7	Indication of surfaces which have to meet special requirements

4.2.2 Dashed lines. Dashed lines should comprise dashes of consistent length and spacing, approximately to the proportion shown in the examples in the table.

4.2.3 Thin chain lines. Thin chain lines should comprise long dashes alternating with short dashes. The proportions should be generally as shown in the table but the lengths and spacing may be increased for very long lines.

4.2.4 Thick chain lines. The lengths and spacing of the elements of thick chain lines should be similar to those of thin chain lines.

4.2.5 General. All chain lines should start and finish with a long dash and when thin chain lines are used as centre lines they should cross one another at solid portions of the line. Centre lines should extend only a short distance beyond the feature unless required for dimensioning or other purposes. They should not extend through the spaces between views and should not terminate at another line of the drawing. Where angles are formed in chain lines, long dashes should meet at corners. Arcs should join at tangent points. Dashed lines should also meet at corners and tangent points with dashes.

Fig A1 illustration application of the various types of lines

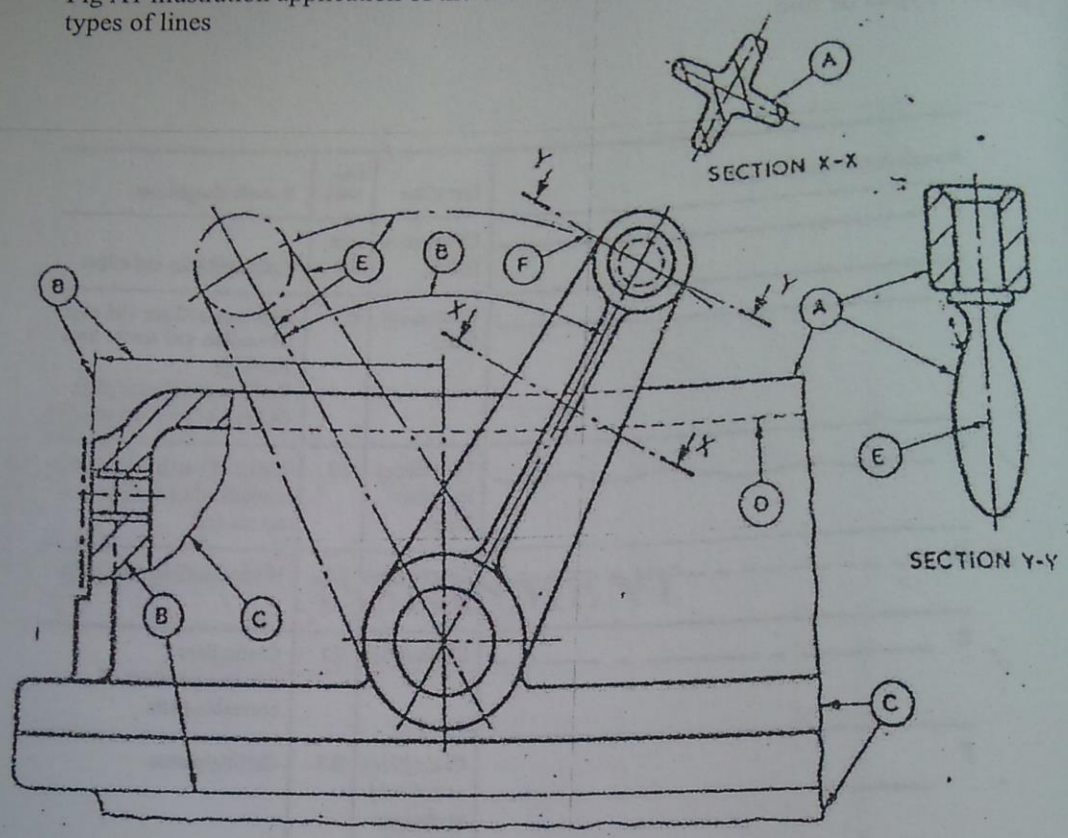

Fig A1: Application of the various types of line

5. Lettering

5.1 Introduction

It is important that characters should be uniform and capable of being produced by hand, stencil, machine or other means at reasonable speed. The characters on the drawing should remain legible not only in the direct photocopy print but in the form of reduced copy or as an image on a microfilm viewing screen.

Clarity, style, size and spacing are important, particularly for figures, as unlike letters they rarely fall into identifiable patterns and must be read individually. Characters should be open form and devoid of serifs and other embellishments. All strokes should be black and of consistent density compatible with the line work. Care should be taken that sufficient space exists between characters and parts of characters to ensure that ' filling in ' will not take place during reproduction.

5.2 Style

No particular style for hand lettering is recommended, the aim should be to produce legible and unambiguous characters. Vertical or sloping characters are suitable for general use but the presentation should be consistent on any one drawing, i.e. vertical and sloping letters should not be mixed. The examples in Fig. 7 are provided as a guide only.

Capital letters are preferred to lower case as they are less congested and are less likely to be misread when reduced in size. It is recommended that lower case letters be restricted to instances where they form part of a standard symbol, code or abbreviation.

1. Draw a line AB 46 long and bisect it.
2. Draw the line BD 92 and divide it into seven equal parts.
3. Draw two lines making an angle of $35\frac{1}{2}$ with each other. Bisect the angle and transfer one half of it to a new position.
4. Construct a regular polygon of the following sides given a side AB to be 42.
   i. Five sided polygon,
   ii. Seven sided polygon, and'
   iii. Six sided polygon.

   Are the polygon inscribed or circumscribed.
5. Find the circumference of a circle by geometry given the radius as 25mm.
6. Draw the ellipse having a major diameter of 54 and a minor diameter of 33 by the following methods:
   (a) Concentric circles method.
   (b) Four-centre method.
7. Trace the path of a point P on a circle having a diameter of 40mm as it rolls on a straight line without slipping. Name the resulting curve.
8. If the circle in (7) rolls on a convex convex curve of radius 54 trace the curve and name it.
9. If the circle in (8) rolls in a concave curve of radius 45 trace the curve and name it.
10. Draw the involute of a circle of diameter 32mm for one complete revolution of the circle.

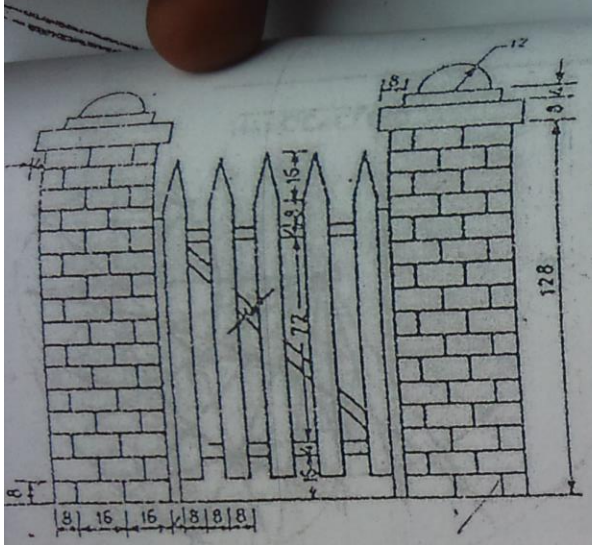

(a)

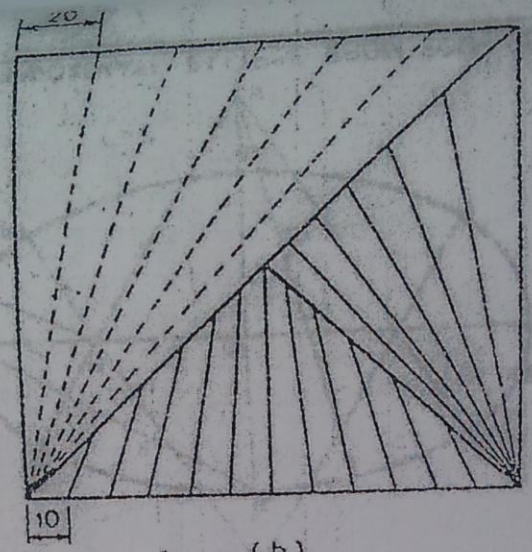

(b)

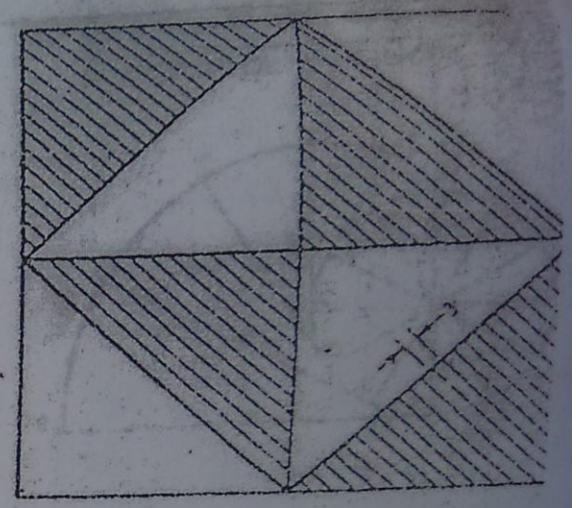

(c)

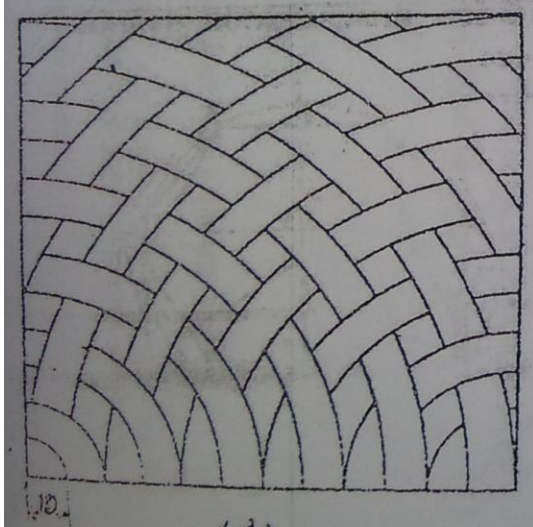

(d)

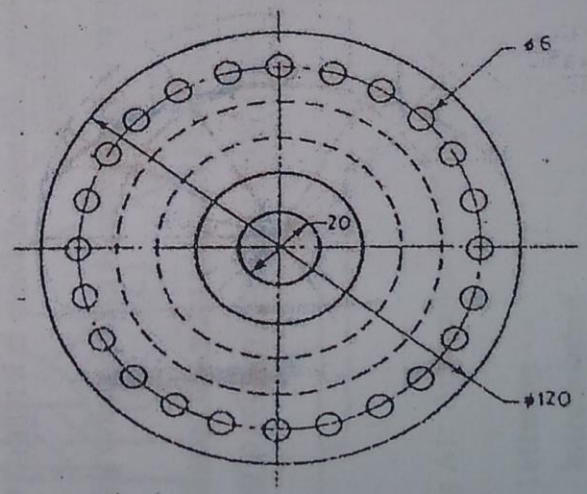

(e)

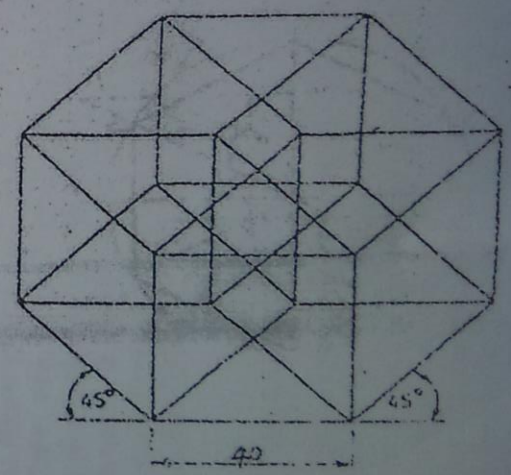

(f)

PRINCIPLES OF TANGENCY.

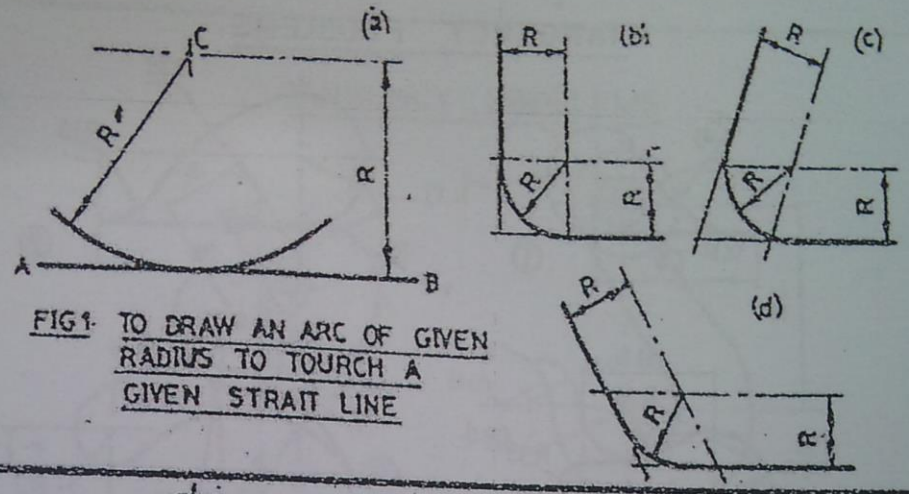

FIG 1. TO DRAW AN ARC OF GIVEN RADIUS TO TOURCH A GIVEN STRAIT LINE

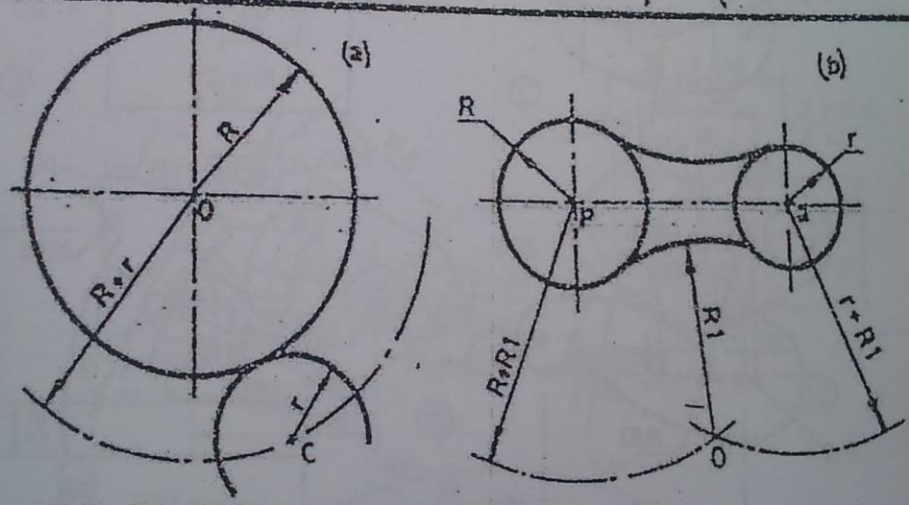

FIG 2. TO DRAW AN ARC OF GIVEN RADIUS TO TOUCH A GIVEN ARC EXTERNALLY

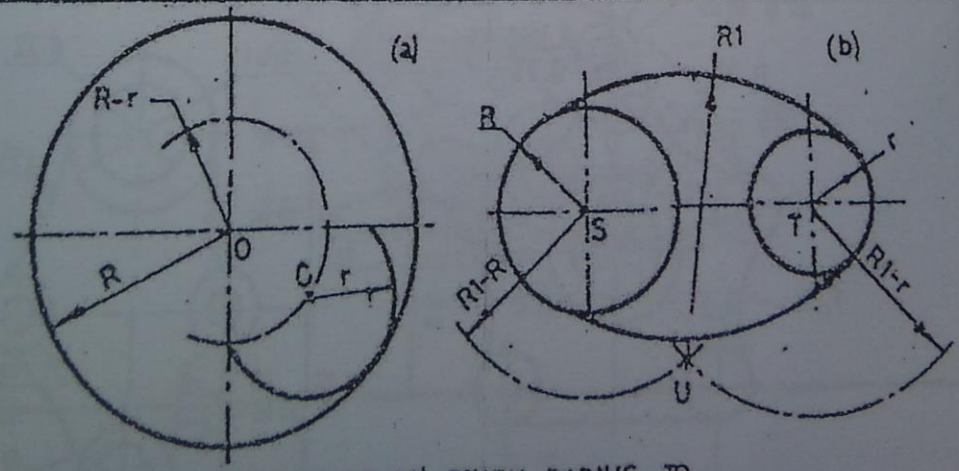

FIG. 3 TO DRAW AN ARC OF GIVEN RADIUS TO TOUCH A GIVEN ARC INTERNALLY

TANGENCY PROBLEMS.

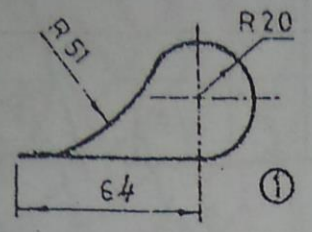

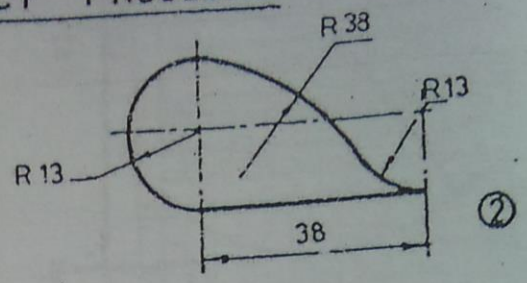

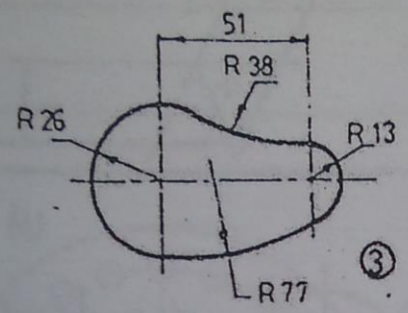

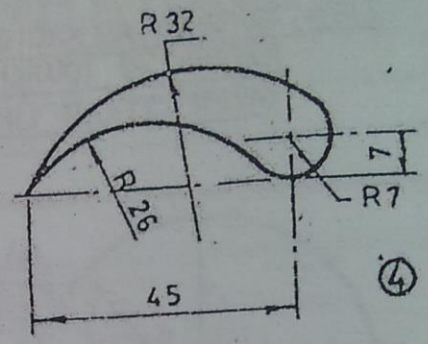

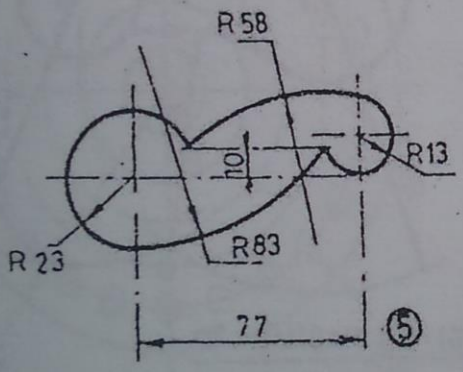

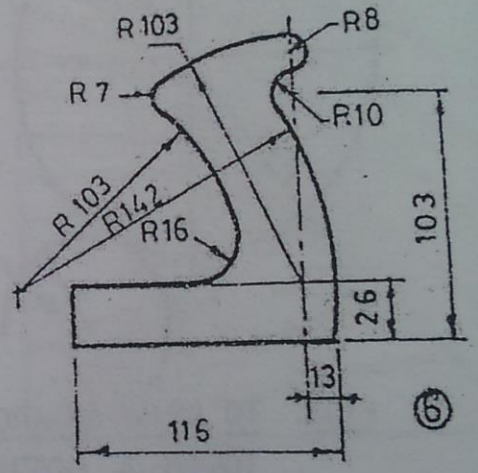

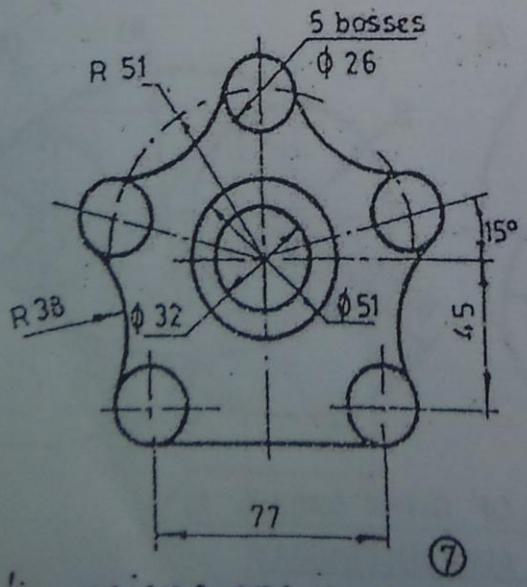

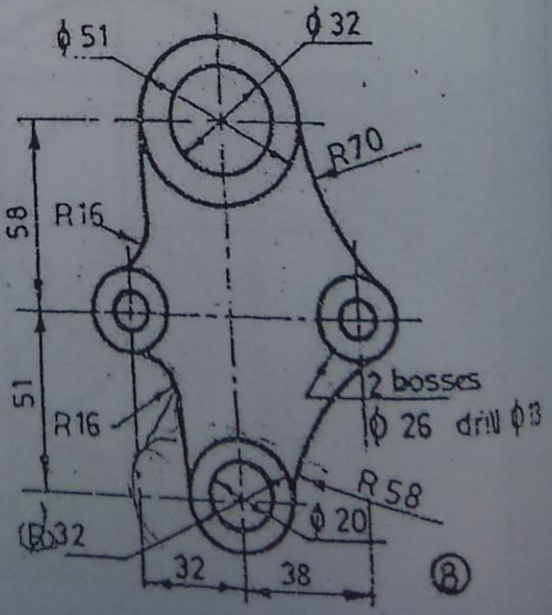

All dimensions are in mm.

TANGENCY PROBLEMS

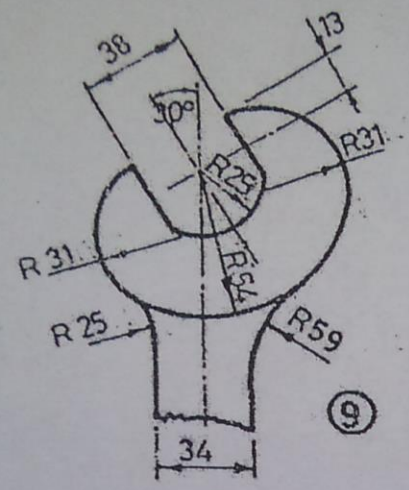

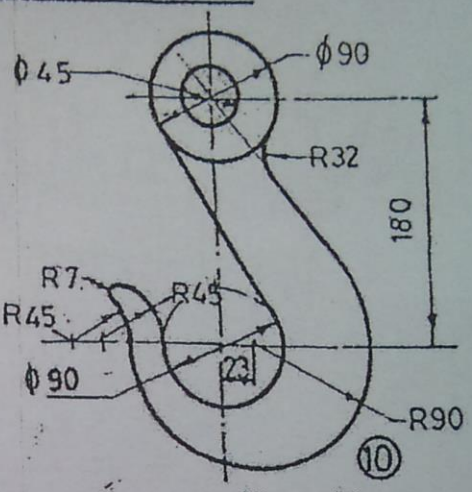

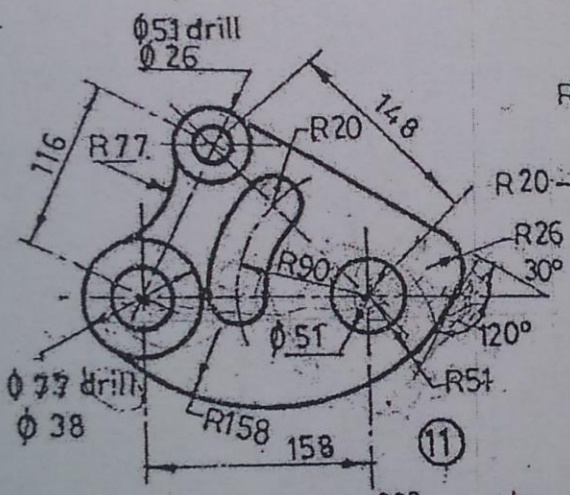

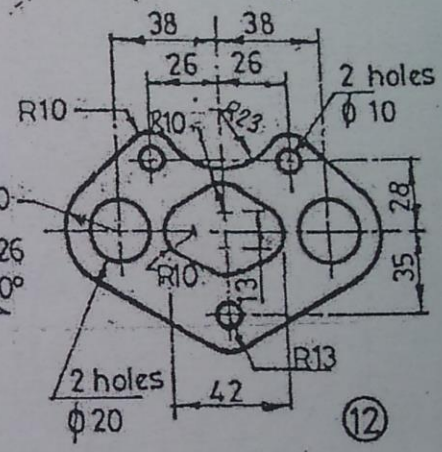

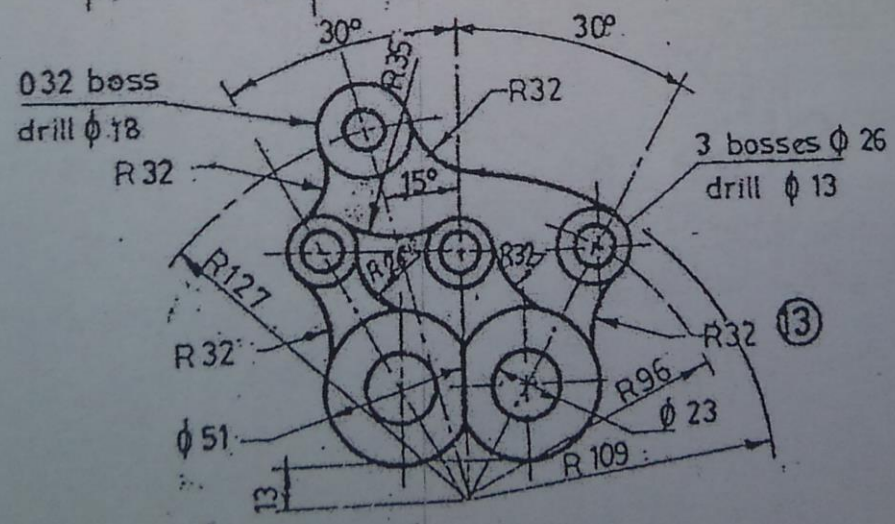

TANGENCY PROBLEMS

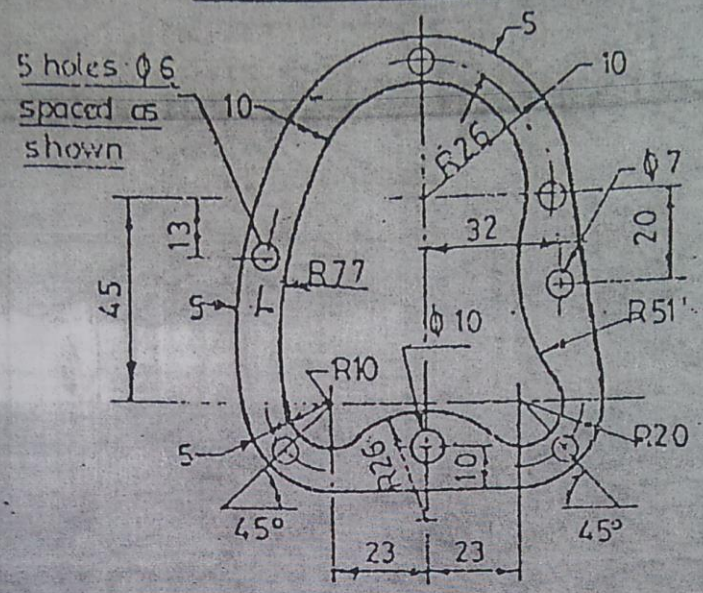

(14)

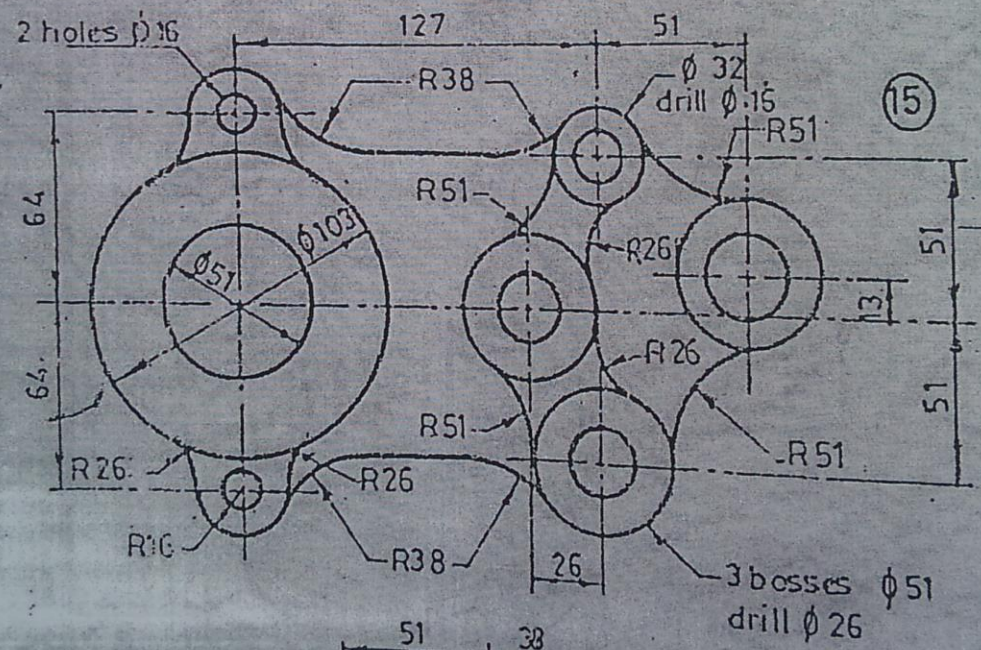

(15)

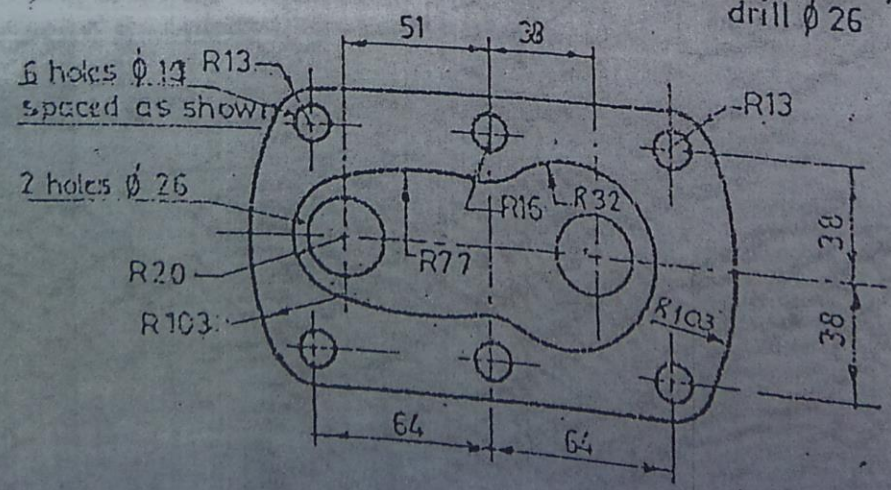

(16)

Example.

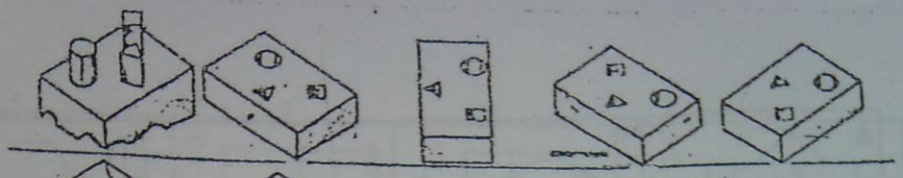

1.

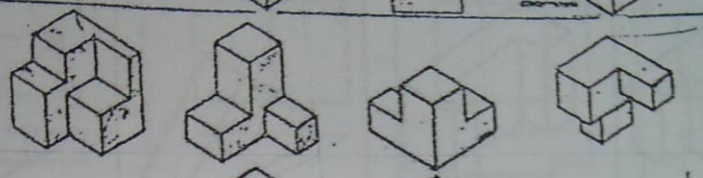

2

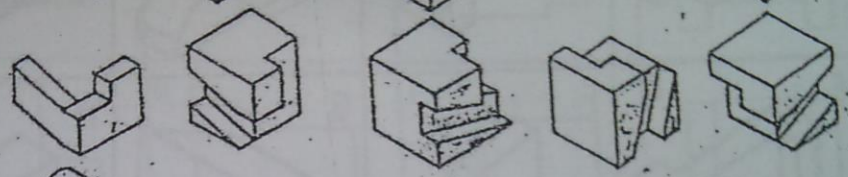

3

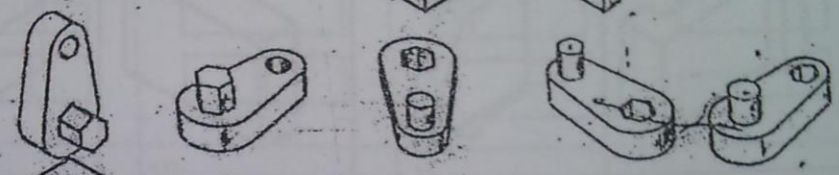

4

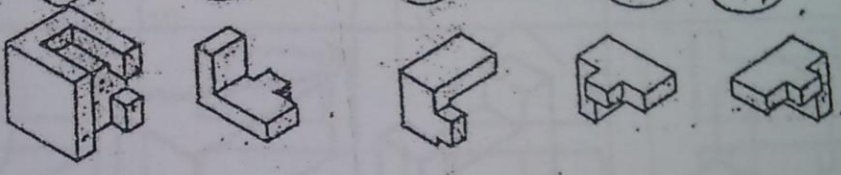

5

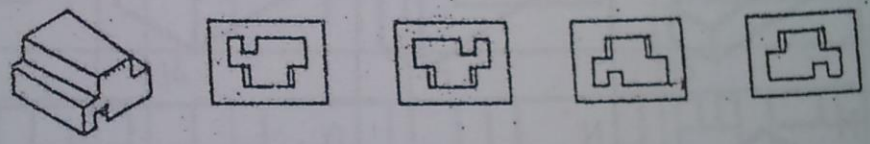

6

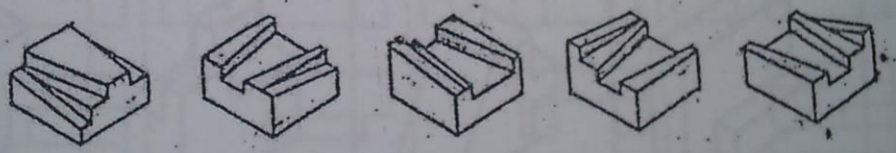

7

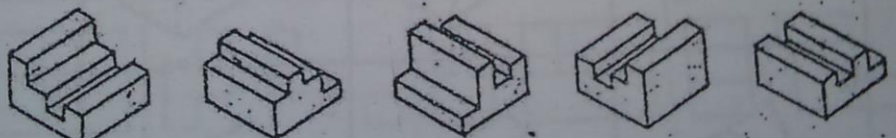

8

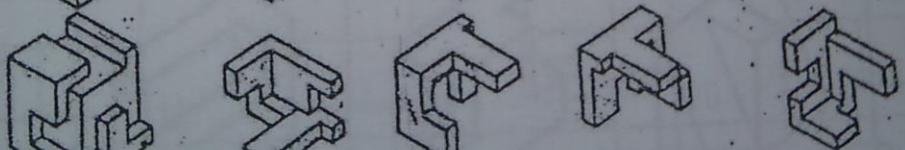

9

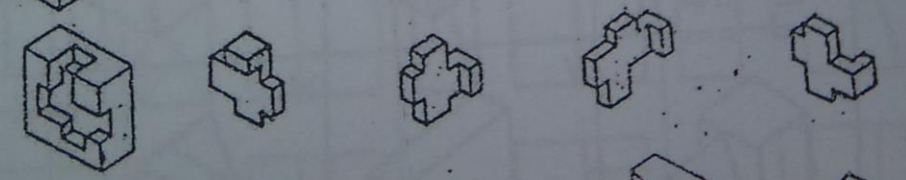

10

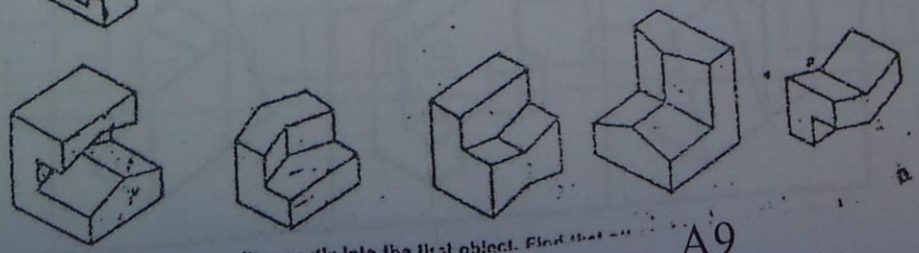

Test 8: One of the objects in each row fits exactly into the first object. Find that ...

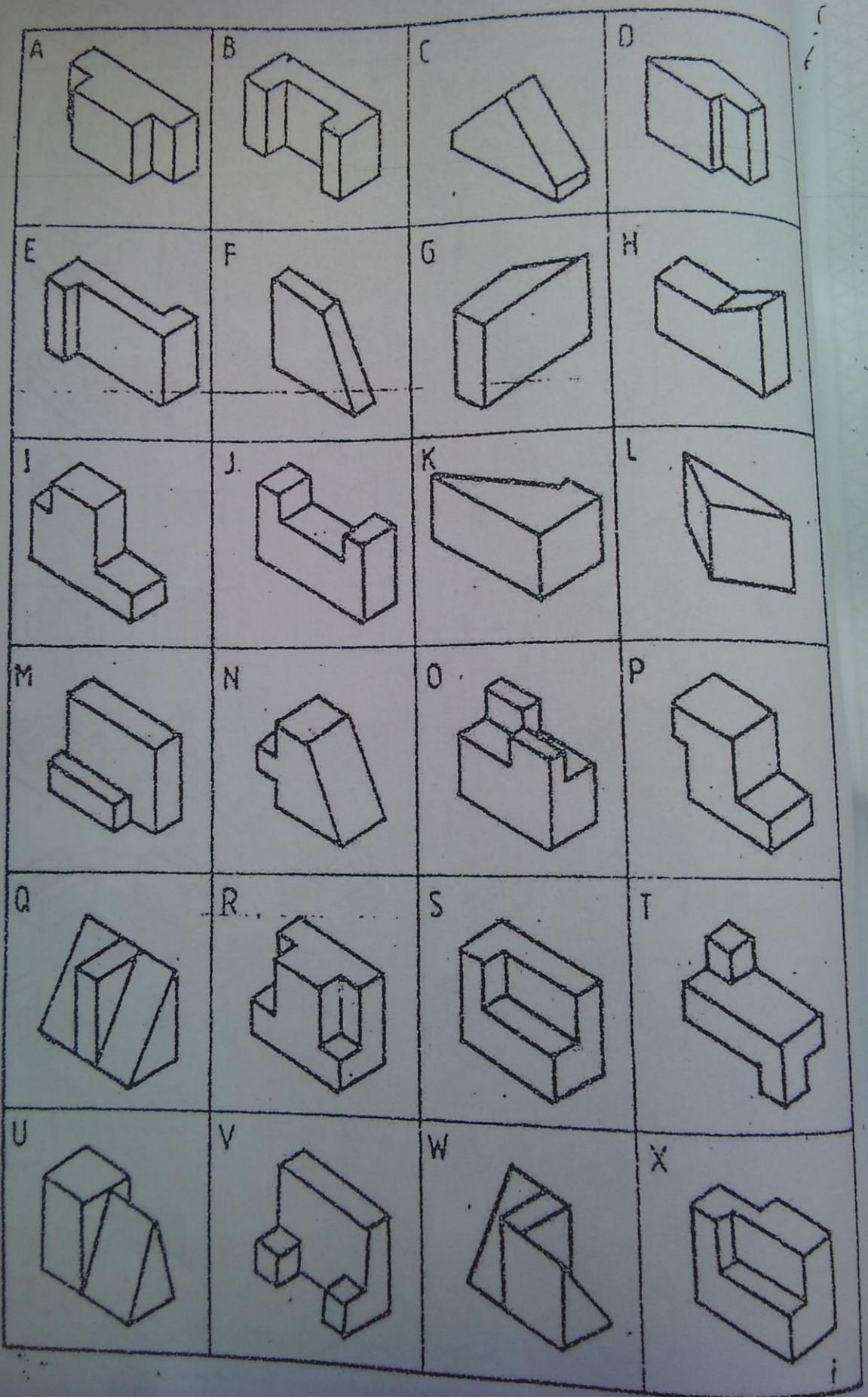
A
B
C
D
E
F
G
H
I
J
K
L
M
N
O
P
Q
R
S
T
U
V
W
X

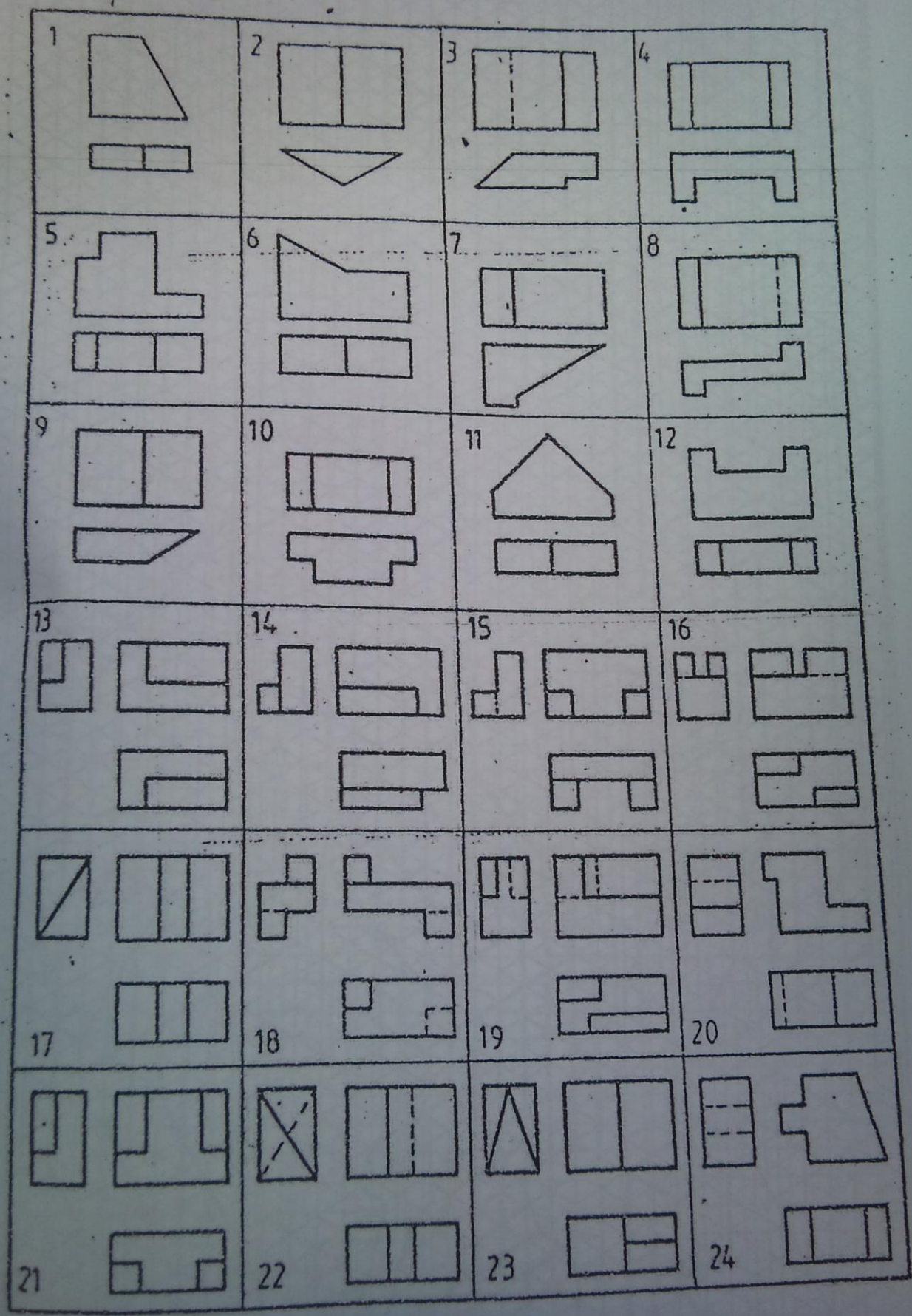
1
2
3
4
5
6
7
8
9
10
11
12
13
14
15
16
17
18
19
20
21
22
23
24

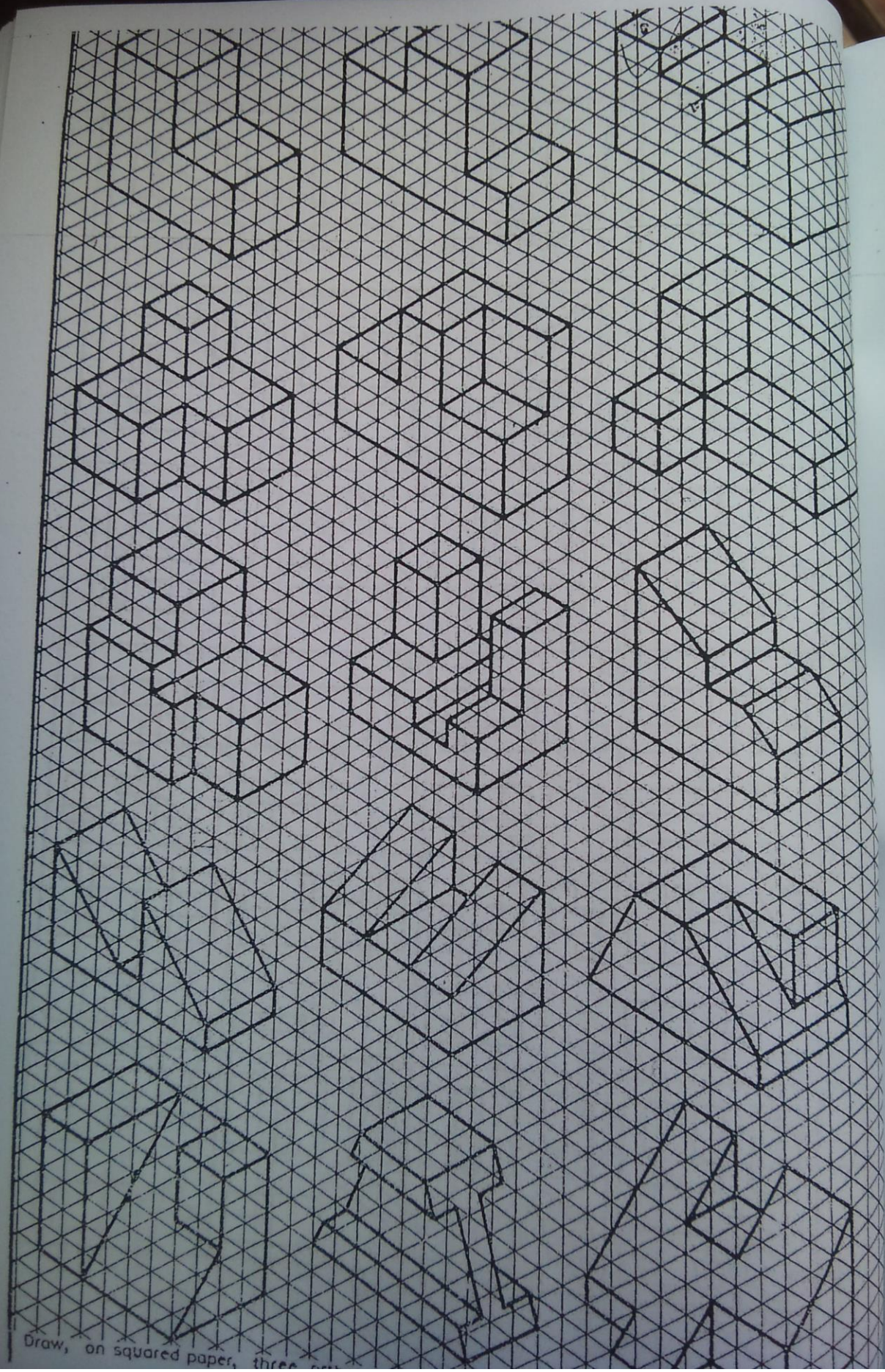

Draw, on squared paper, three

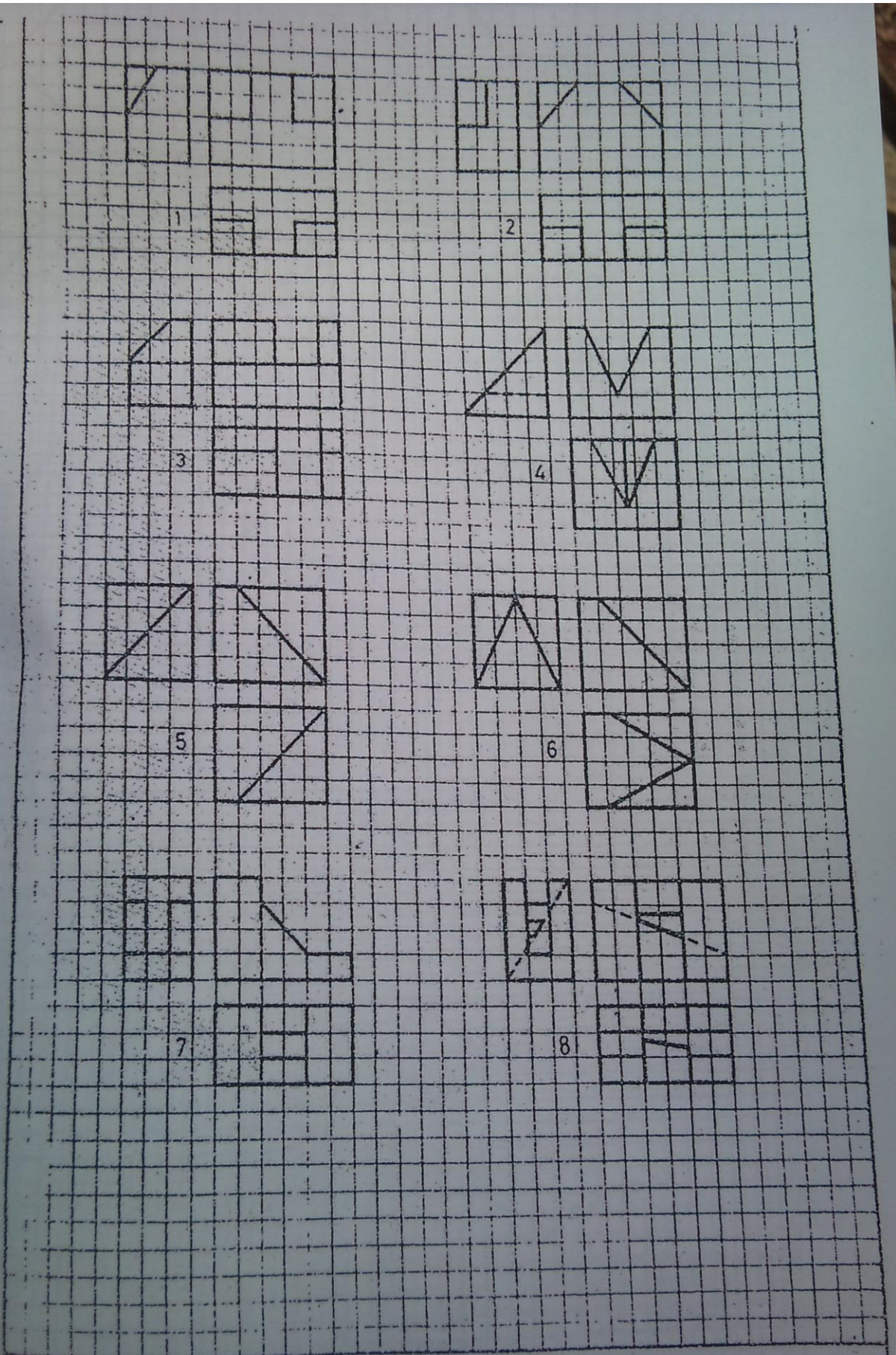

Draw on isometric paper, each of the solids

A13

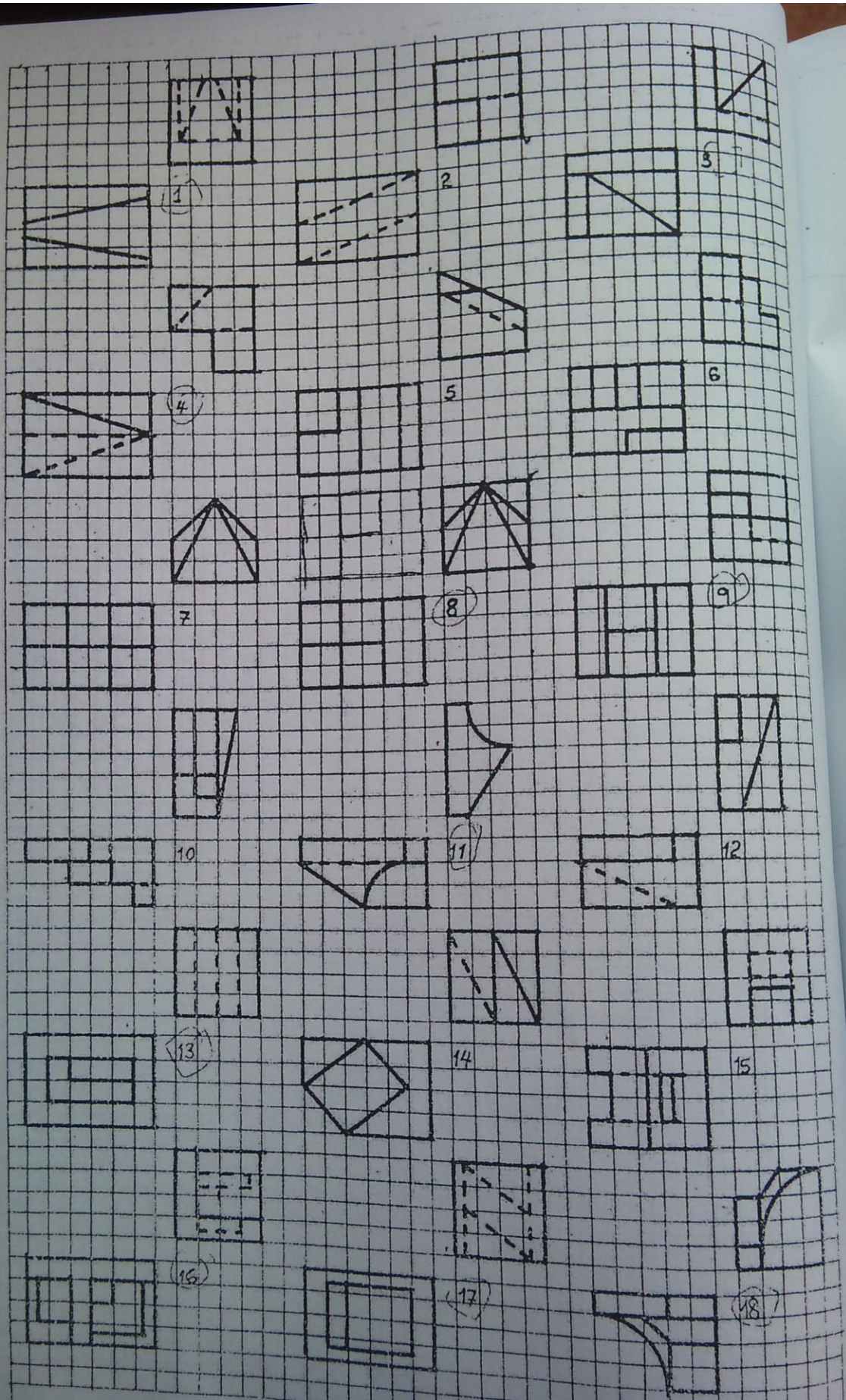

Draw, in the space provided, a third view of each

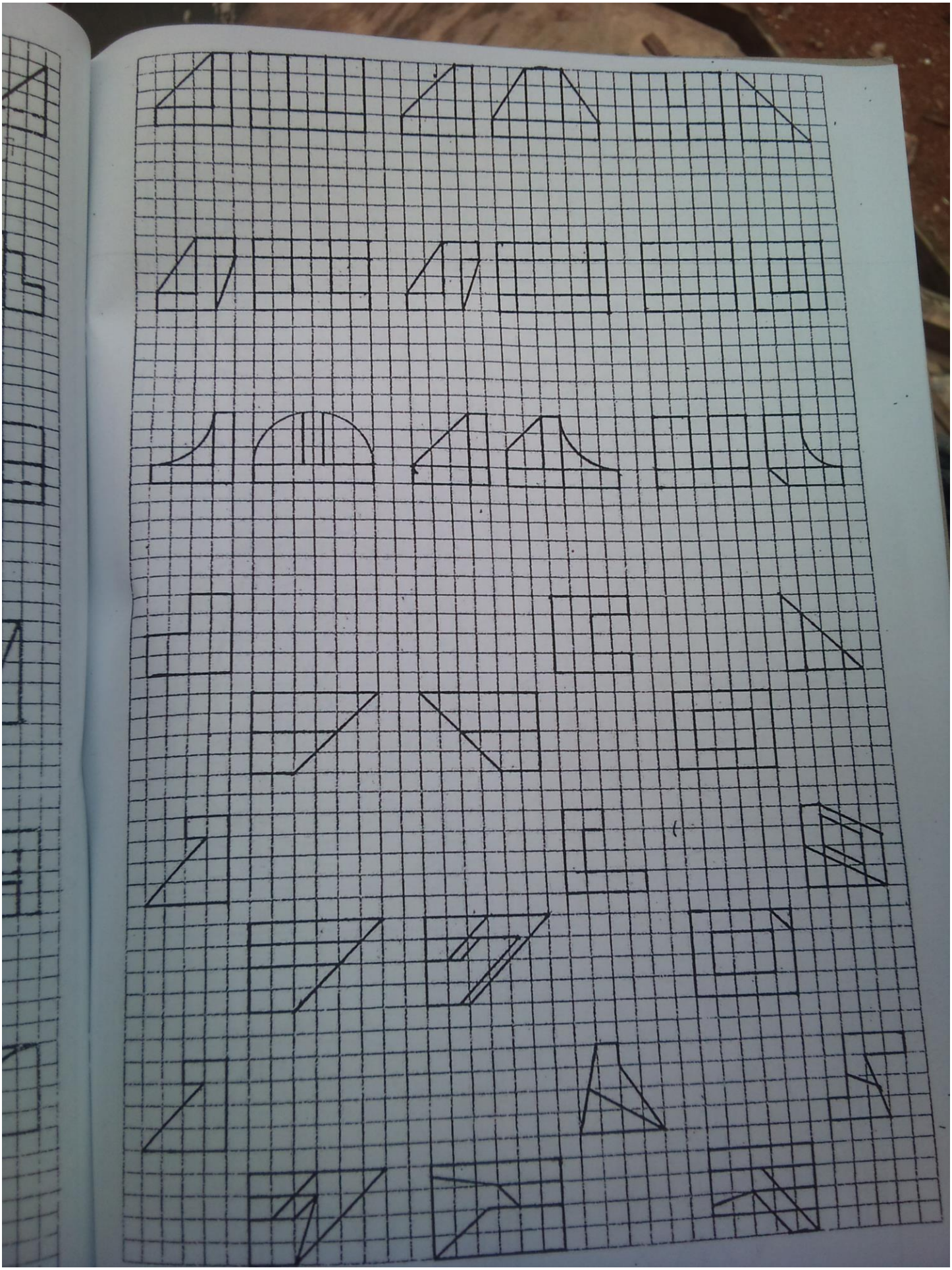

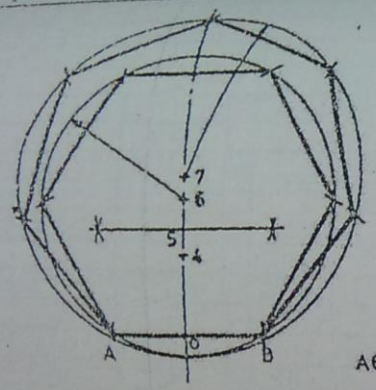

A6 = AB

OA = O4

REGULAR POLYGON WITH SIDE A B GIVEN

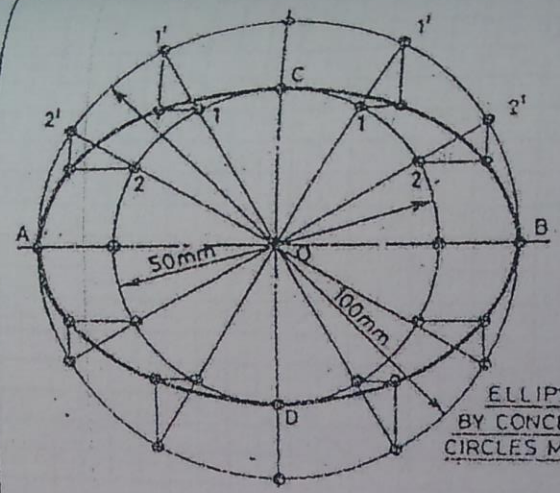

ELLIPSE BY CONCENTRIC CIRCLES METHOD

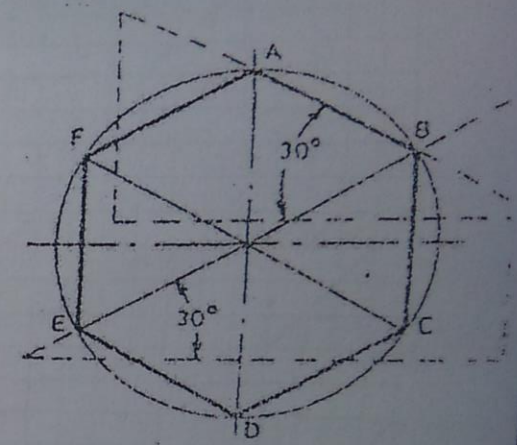

HEXAGON- WITH DISTANCE ACROSS CORNERS GIVEN

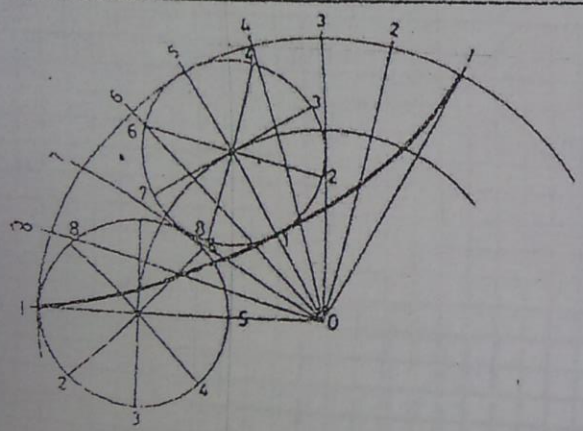

HYPOCYCLOID

EC = AO — CO

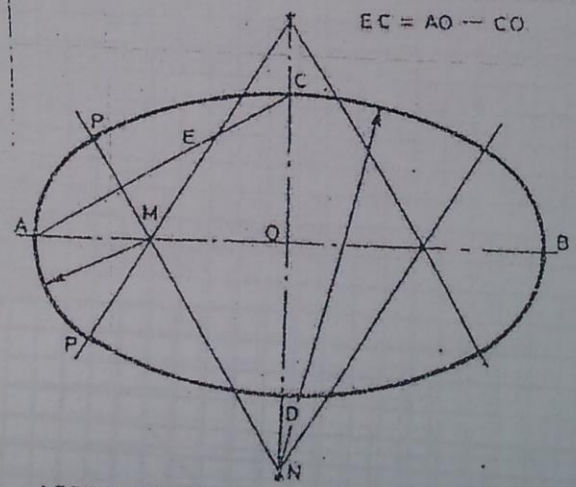

APPROXIMATE ELLIPSE FROM FOUR CENTRES

AL = AI

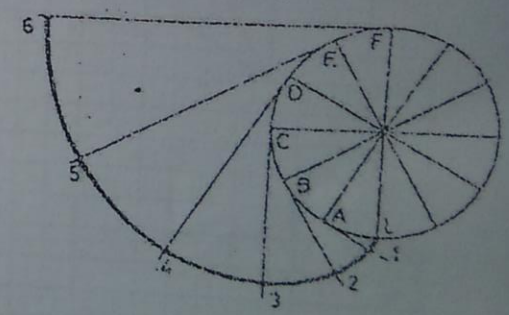

INVOLUTE OF A CIRCLE

(HALF INVOLUTE SHOWN)

A16

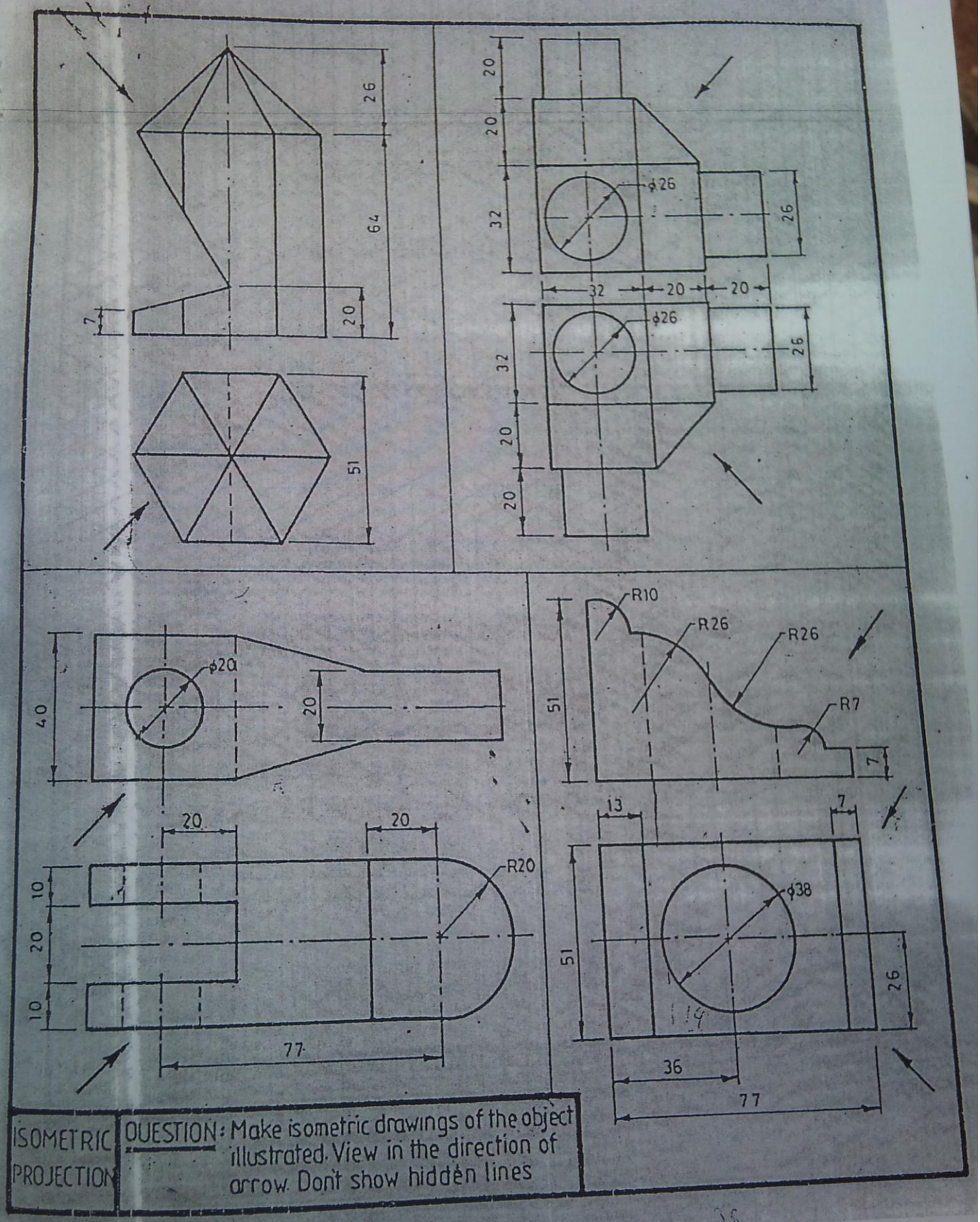

ISOMETRIC PROJECTION

QUESTION: Make isometric drawings of the object illustrated. View in the direction of arrow. Don't show hidden lines

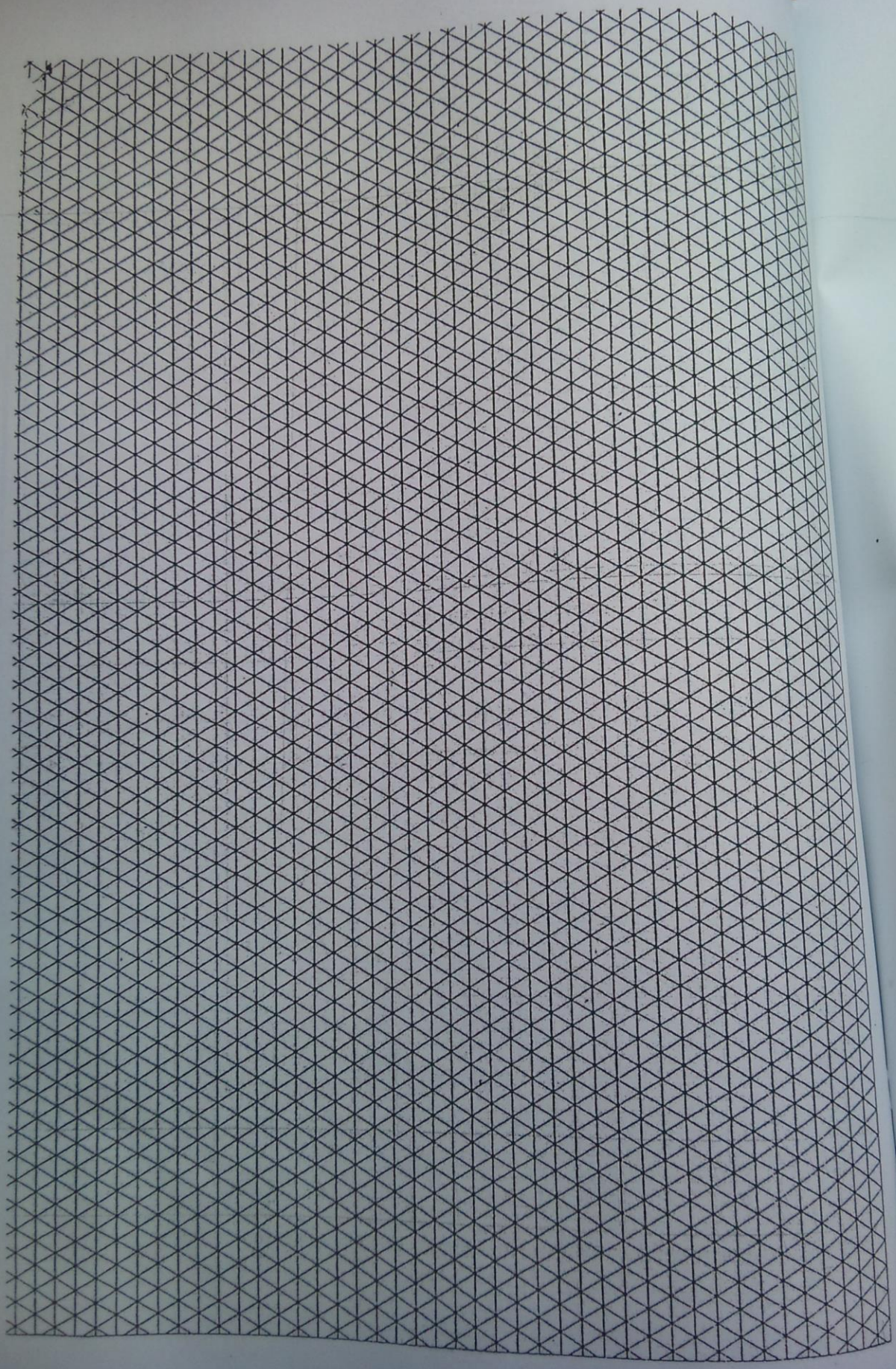

SAMPLE QUESTIONS

SAMPLE QUESTIONS

TANGENCY PROBLEMS

1. Reconstruct **Figure 1**, on a Drawing Sheet, making all constructional lines visible.

   [KNUST, COE, Dec, 2013, Aug 2014]

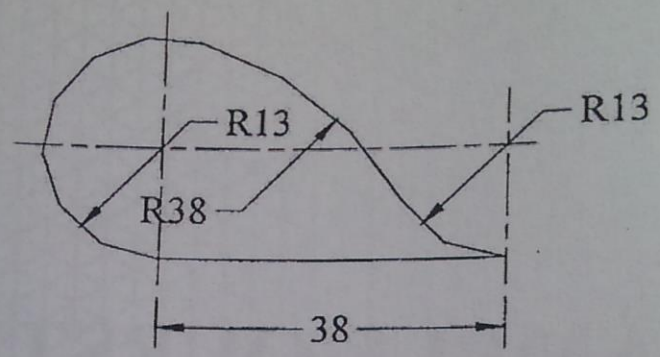

Figure 1.

2. Draw FULL SIZE the guide Bracket shown in **Figure 2**. Show clearly all constructional lines and points. **[KNUST, COE, Nov, 2009, Aug 2011]**

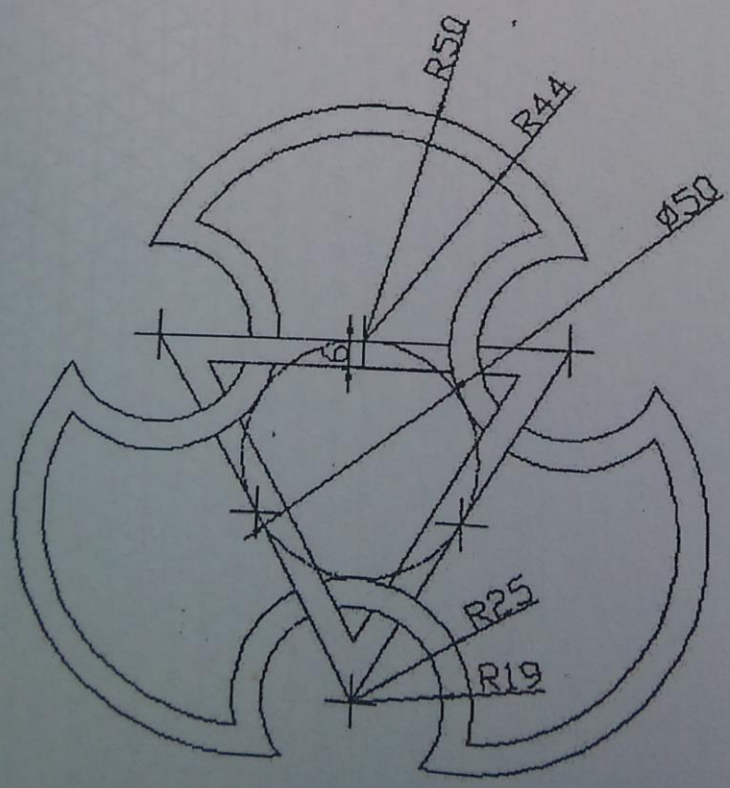

Figure 2.

3. Draw full size the hook shown in **Figure 3** show clearly all construction lines and arcs.

[KNUST, COE, Dec, 2010]

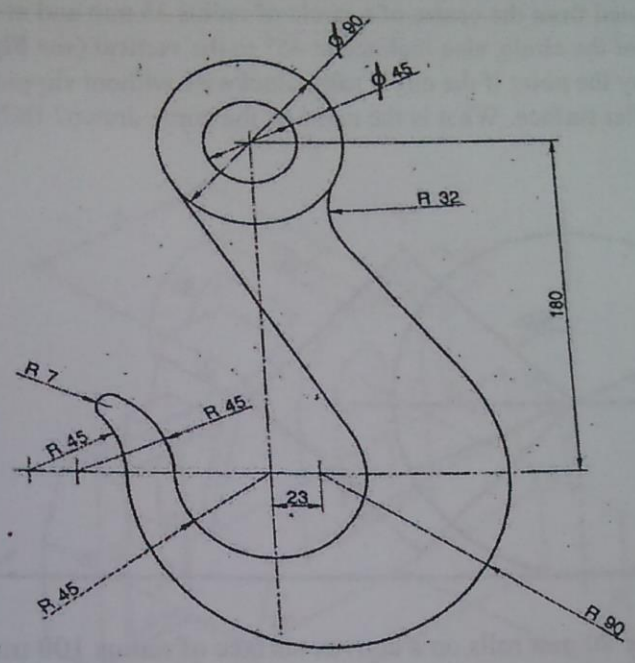

Figure 3.

4. Reconstruct **Figure 4**, on a Drawing Sheet, making all constructional lines visible.

[KNUST, COE, Dec, 2006]

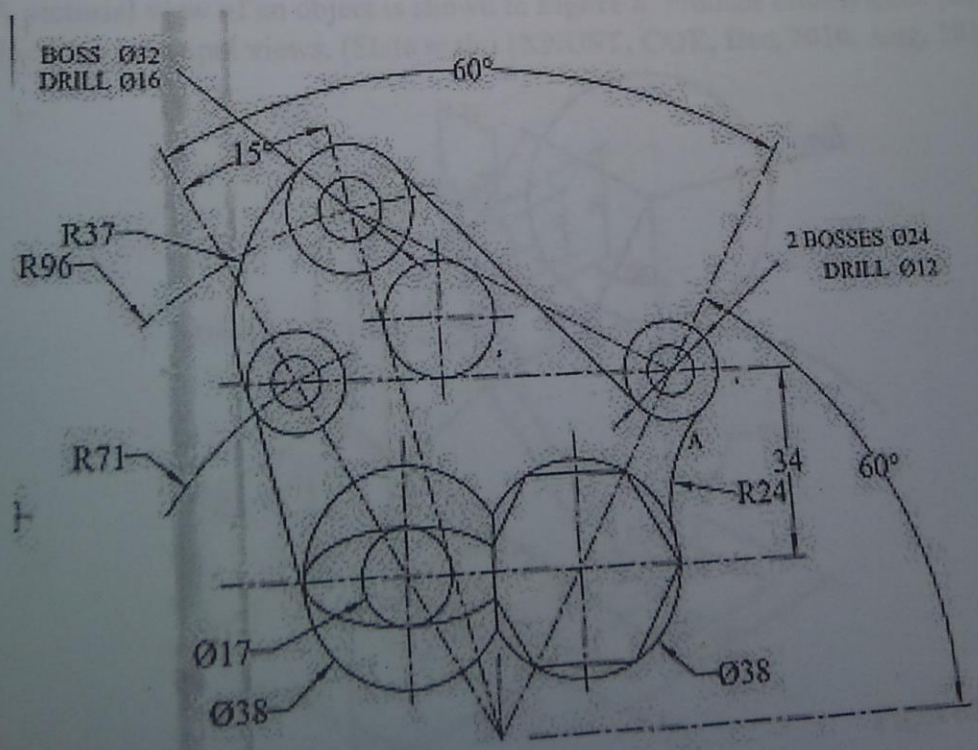

Figure 4

LOCI PROBLEMS

5. A point p is located from the centre of a circle of radius 35 mm and at a distance 40 mm from the centre of the circle, also inclined at 45° to the vertical (see **Figure 5**). Construct the path traced by the point if the circle roles clockwise without slipping through half revolution on a flat surface. What is the name of the curve drawn? **[KNUST, COE, Dec, 2010]**

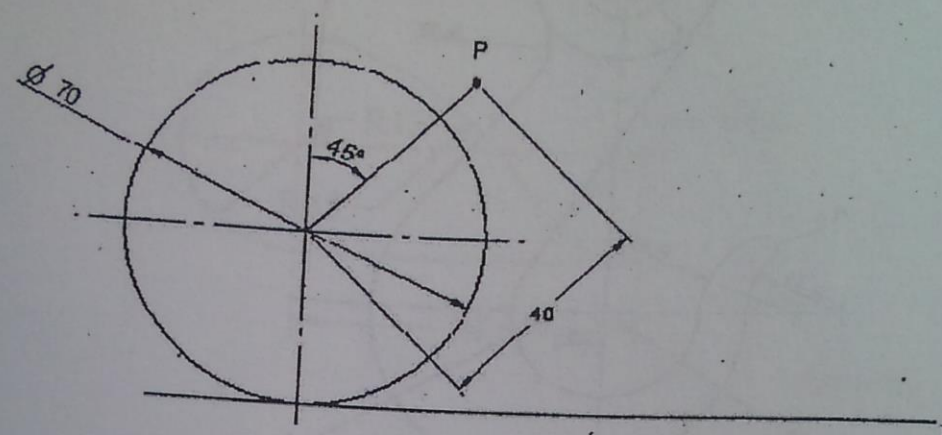

Figure 5

6. A wheel of diameter 80 mm rolls on a convex surface of radius 100 mm as shown in **Figure 6**. Trace out the path of the point, p, located at a distance 45 mm from the centre of the rolling circle and at an angle of 30° to the vertical. Consider the curve for a quarter of a rotation. **[KNUST, COE, Nov, 2009, AUG 2011]**

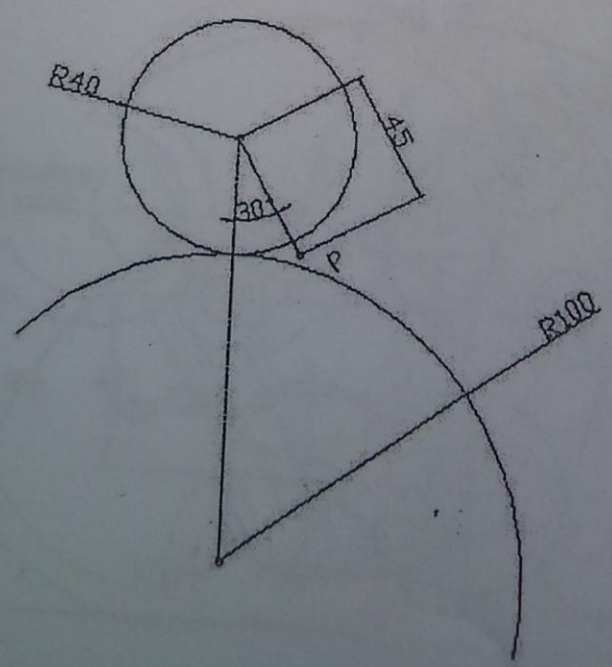

Figure 6.

ORTHOGRAPHIC PROJECTION PROBLEMS

7. A pictorial view of a bracket is shown in **Figure 7**. Produce orthographic projections of the three principal views (state scale). **[KNUST, COE, Dec, 2013]**

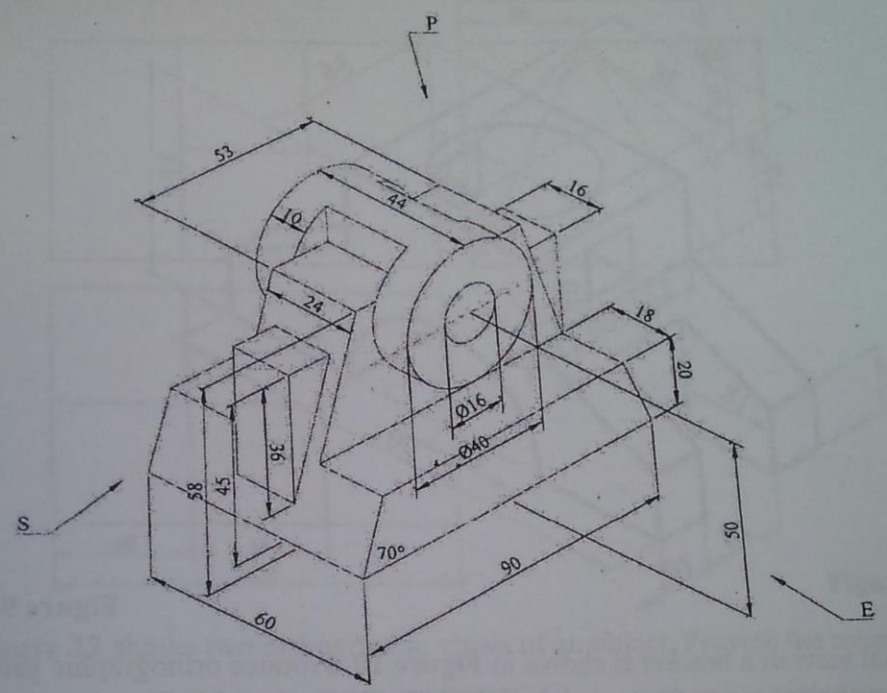

Figure 7

8. A pictorial view of an object is shown in **Figure 8**. Produce orthographic projections of the three principal views. (State scale) **[KNUST, COE, Dec, 2010, Aug, 2014]**

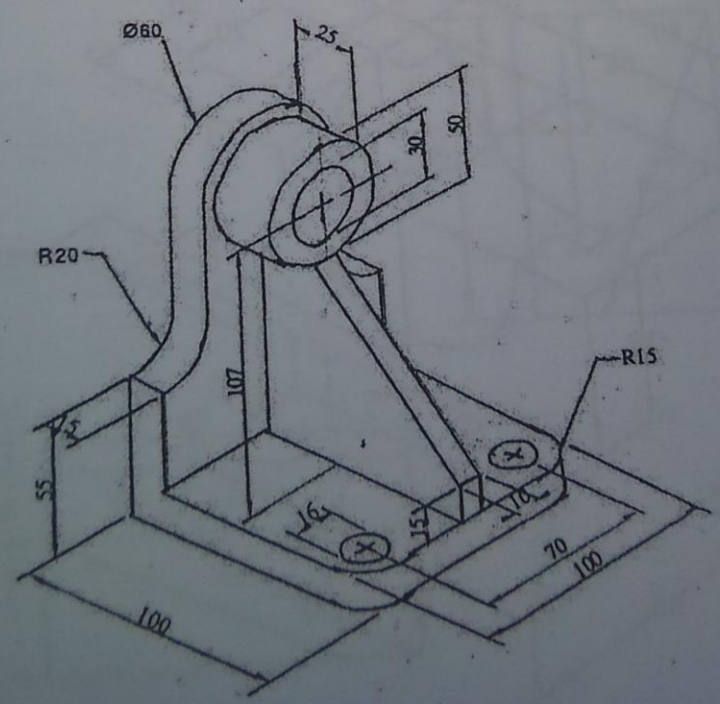

Figure 8

9. Provide the three most important First Angle Orthographic views of the object shown in **Figure 9**. This should be produced on the drawing sheet at a scale of 1:1.

[KNUST, COE, Nov, 2009, Aug, 2011]

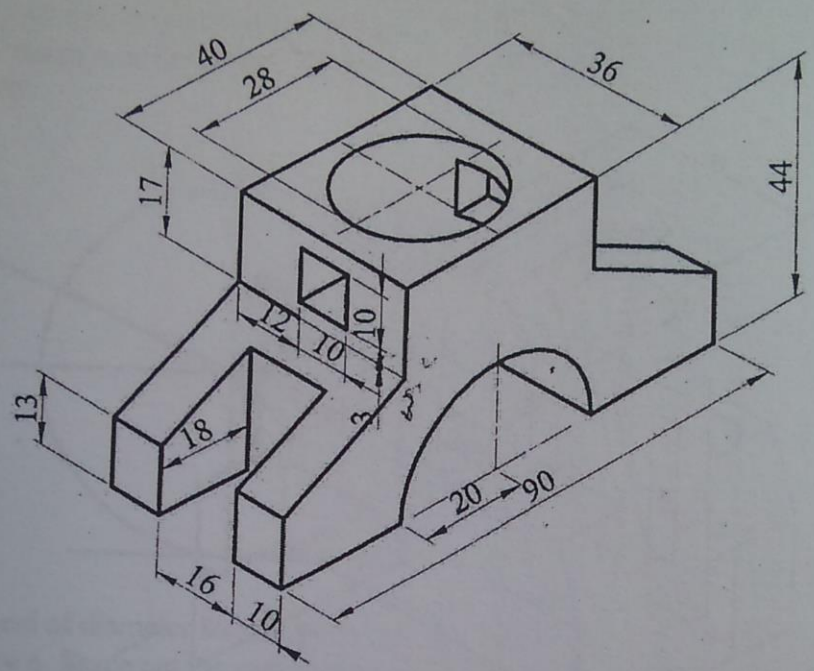

Figure 9

10. A pictorial view of a bracket is shown in **Figure 10**. Produce orthographic projections of the three principal views (state scale). **[KNUST, COE, Dec, 2006]**

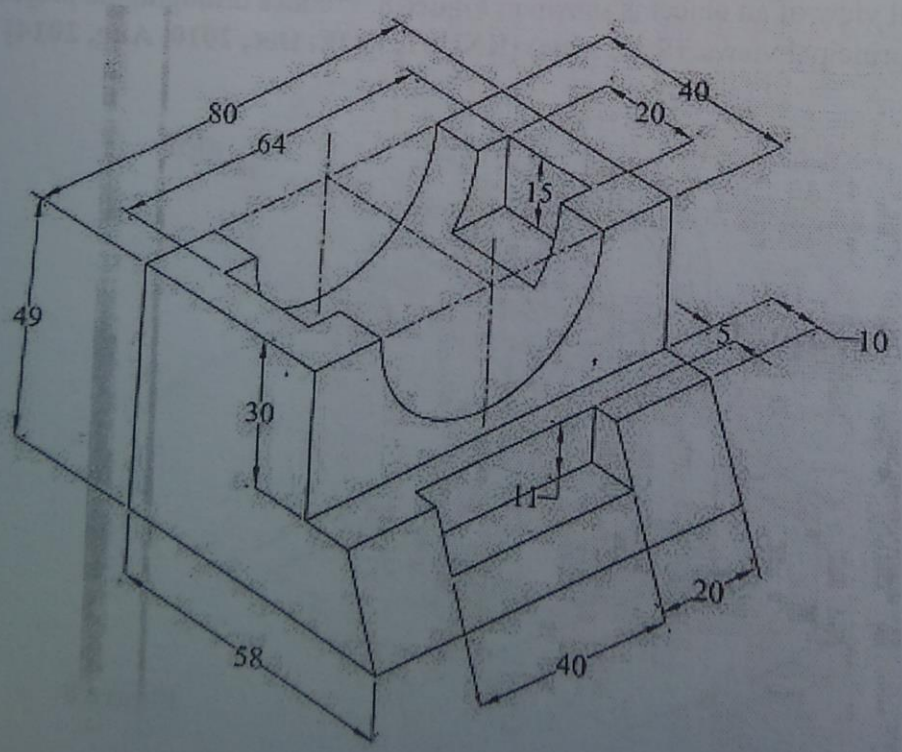

Figure 10

ISOMETRIC PROJECTION AND MISSING VIEW PROBLEMS

11. Produce an isometric projection of the bracket whose orthographic views are shown in **Figure 11** (hidden edges need not be shown). **[KNUST, COE, Dec, 2010, Dec, 2013, Aug 2014]**

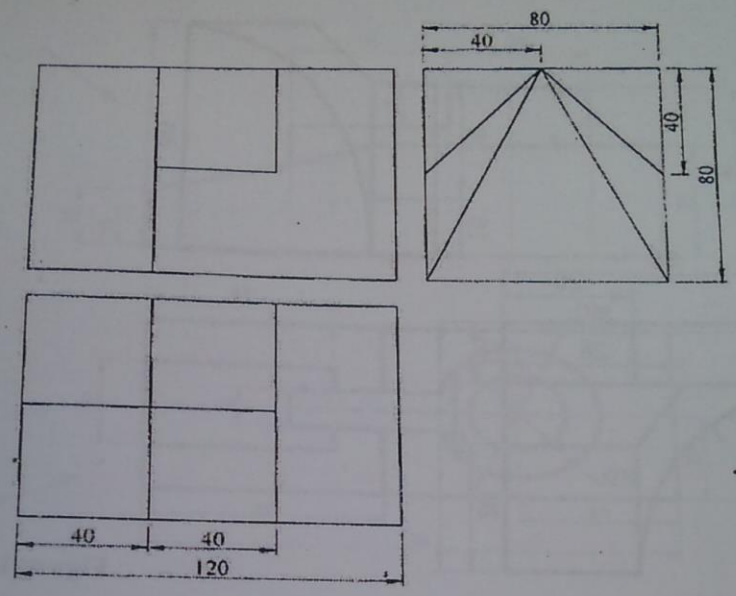

Figure 11

12. **Figure 12** shows two orthographic views of an object. Provide the missing view **[KNUST, COE, Dec, 2013]**

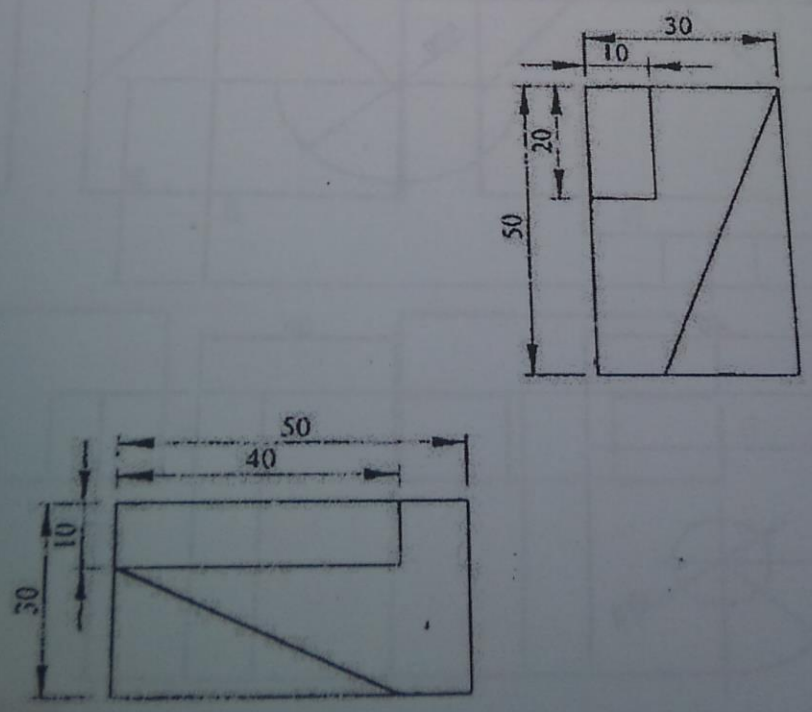

Figure 12

13. The First Angle Orthographic Views of a block are shown in **Figure 13**. Provide the missing view and also show the isometric projection of the block.

[KNUST, COE, Nov, 2009, Aug 2011]

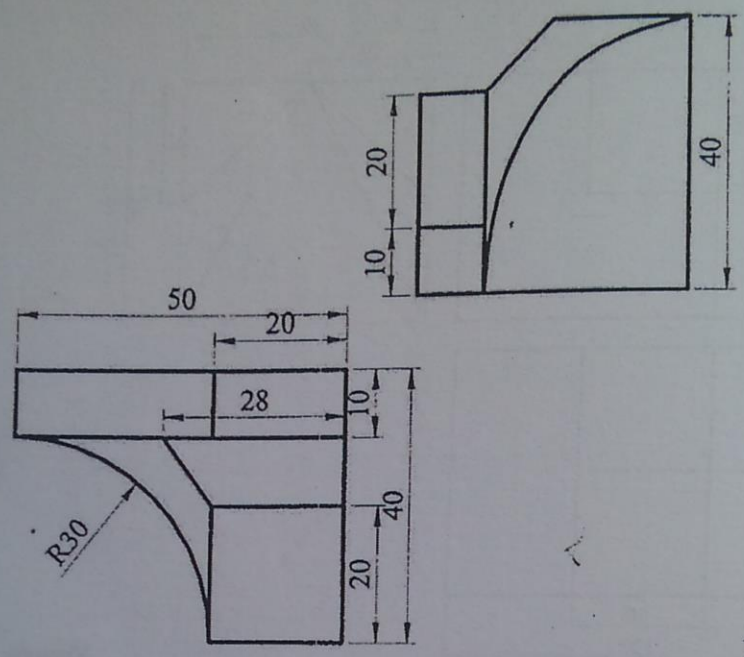

Figure 13

14. The front and plan views of an object are provided in **Figure 14**. Produce the isometric drawing of the object. **[KNUST, COE, Nov, 2009]**

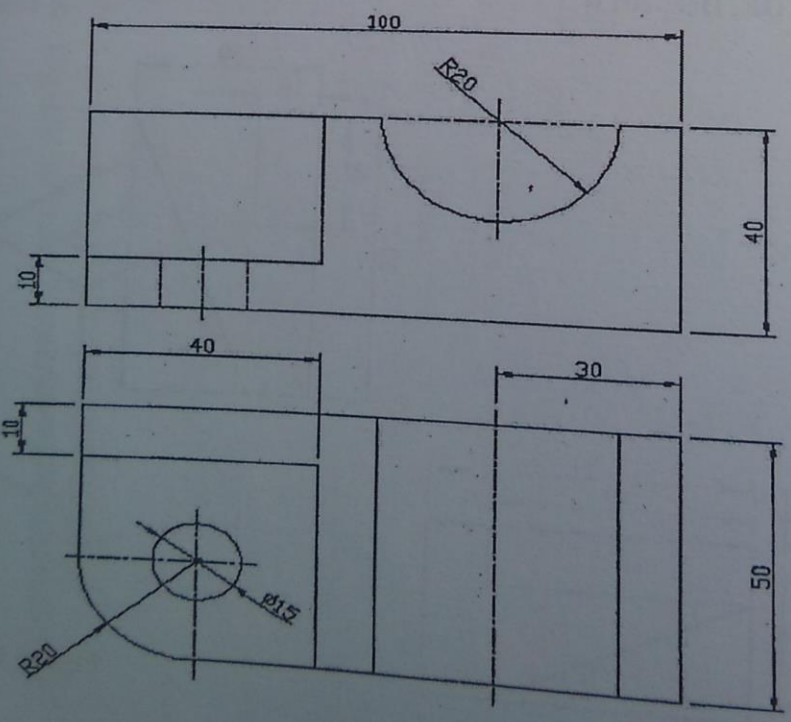

Figure 14

15. Provided in the **Figure 15** below are two First Angle Orthographic views of the object and an arrow in each view showing the required direction views. Provide the required Isometric Projection of the object corresponding to the **SPECIFIED** direction at a scale of 1:1. **[KNUST, COE, Aug, 2011]**

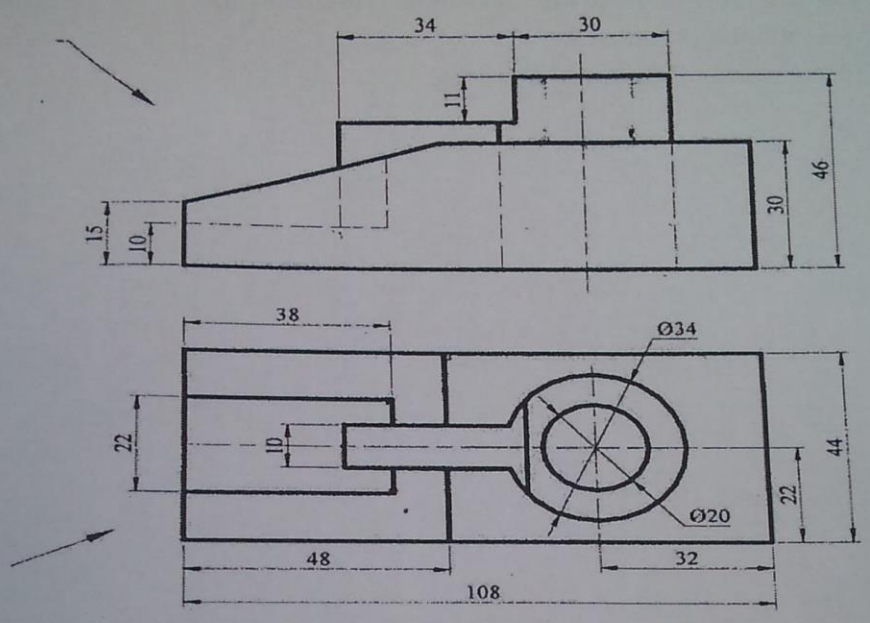

Figure 15

16. The orthographic views of a 3-dimentional object are shown in **Figure 16** below. Which of the views will you select as the most important view (Front View)?

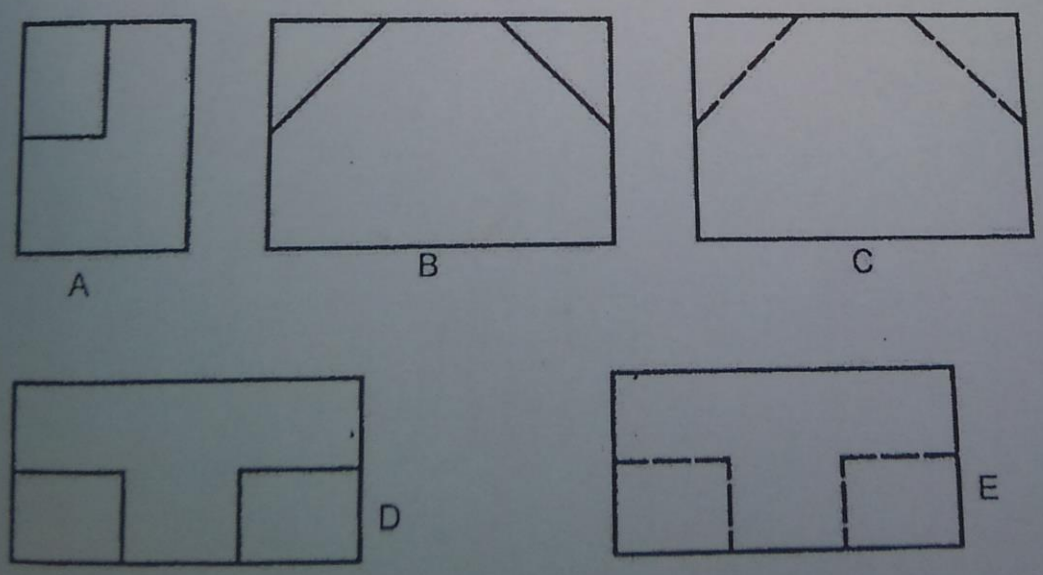

Figure 16

REFERENCES

- Hiram, E.G.; Engineering Drawing With Creative Design.
- Parker, M.A. and Pickup, F.; Engineering Drawing 1.
- Jackson, E and Coll, M.; Geometrical and Engineering Drawing.
- K. Morling.; Geometric construction
- Yarwood.; Geometric and Technical Drawing.