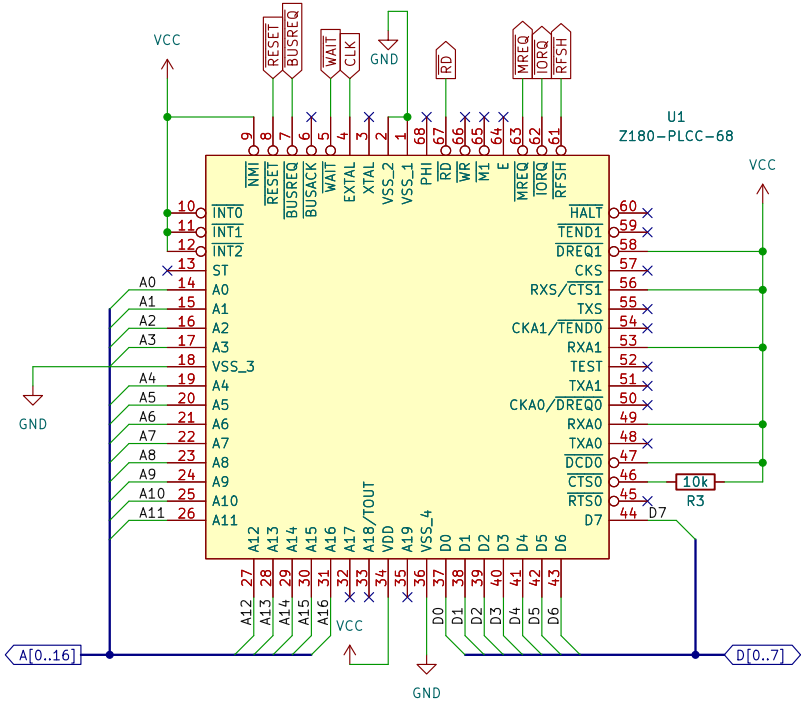

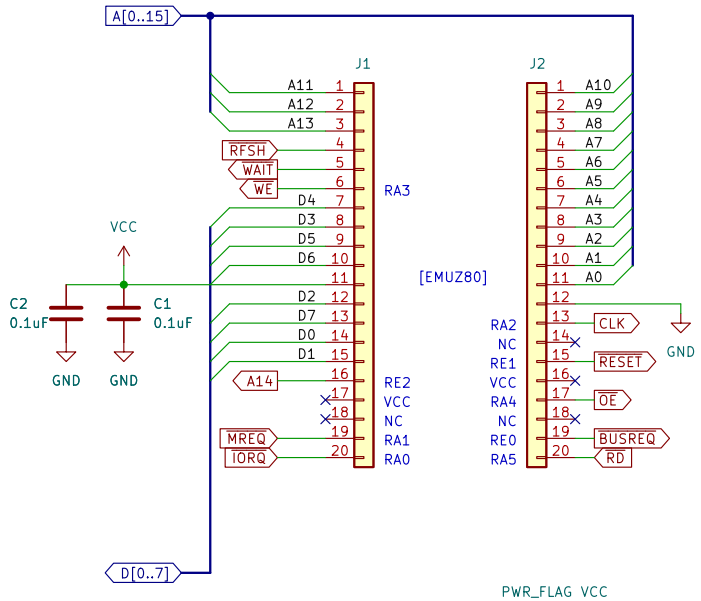

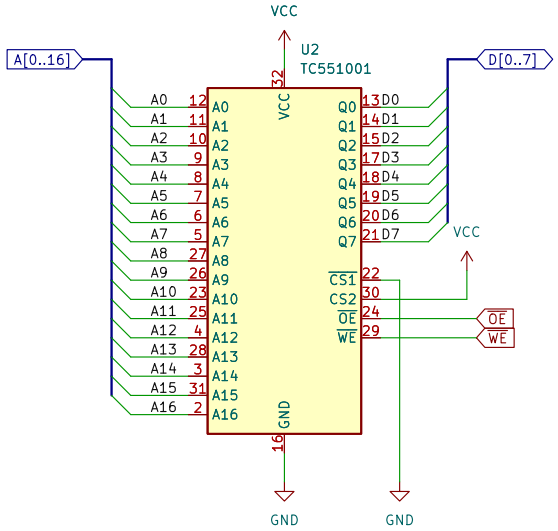

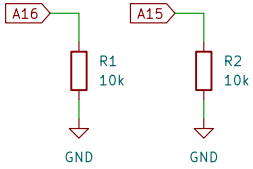

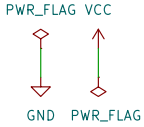

Satoshi Okue

Sheet: /
File: MEZZ180RAM.kicad_sch

Title: MEZZ180RAM Mezzanine board for EMUZ80

Size: A4	Date: 2023-02-08	**Rev: A**
KiCad E.D.A. kicad (6.0.10-0)		Id: 1/1