DSP in VLSI

Homework 4

Coordinate Rotation Digital Computer (CORDIC)

Student ID

M11407439

Name

MING-HONG, LIN

Development Environment

HDL	SystemVerilog
Simulation Tools	Synopsys VCS and Verdi
Synthesis Tool	Synopsys DC Compiler
Process	TSMC 16nm (ADFP)
Verification	Python

Due Date: 2026/04/15

Contents

Step 1 — Realize CORDIC properties

1.1 Result 1 - CORDIC scaling factor

Please draw the figure showing $S(N)$ *versus* N for $N = 1 \ldots 30$. (5%)

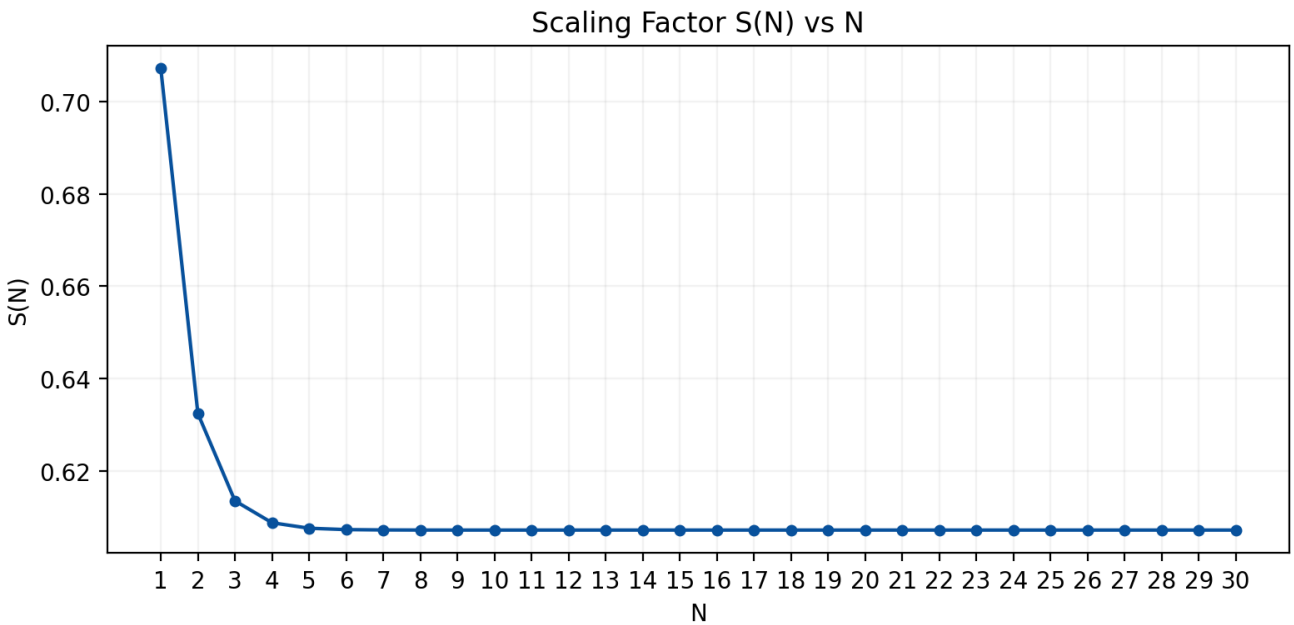

Figure 1.1: Enter Caption

Step 2 — Determine the word-length of fixed-point representation

2.1 Result 2 - Word-length setting

Draw the figure of average absolute error versus fractional wordlength (10%) to show how you determine the setting of word-length of the fractional part. Write down the integer word-length of $X(i)$ and $Y(i)$ that you use all the stages. Please explain it. (5%)

From Figure 1.1, we can observe that after more than 4 micro-rotation iterations, S(N) saturates at approximately 0.6, implying that the scaling factor K(N) accumulated through micro-rotations converges to roughly 1.6. Therefore, in addition to the minimum of 9 fractional bits required as indicated by Figure 2.1, one integer bit and one sign bit must also be included, **bringing the total fixed-point representation to 11 bits.**

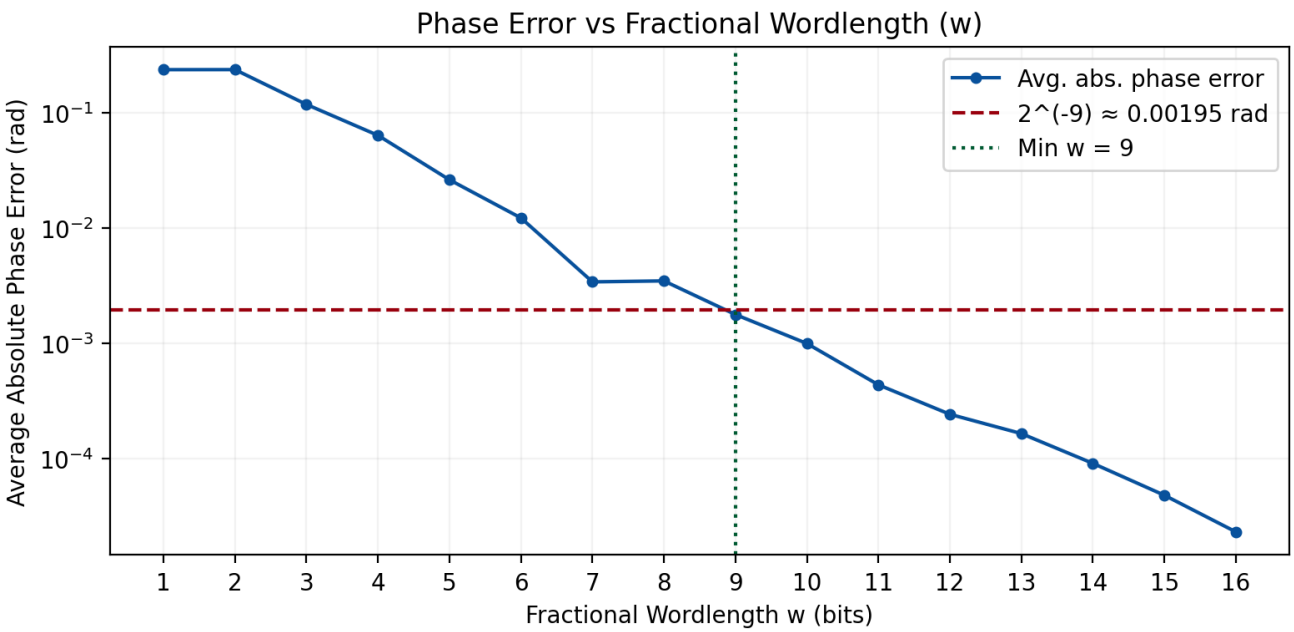

Figure 2.1: Enter Caption

Step 3 — Determine the number of micro rotations for arctangent function

3.1 Result 3 - Micro-rotations and elementary angles

Please draw a figure to denote the average phase errors of 10 quantized input pairs (X, Y) versus different numbers of micro-rotations S (10%) and draw a figure to show the resulted phase errors of 10 quantized input pairs versus the word-length of quantized elementary angles (10%). Explain your selection to satisfy the averaged error criterion of 2^{-9} radian. Also list a table of the elementary angles (both in floating-point representation and binary fixed-point representation). (5%)

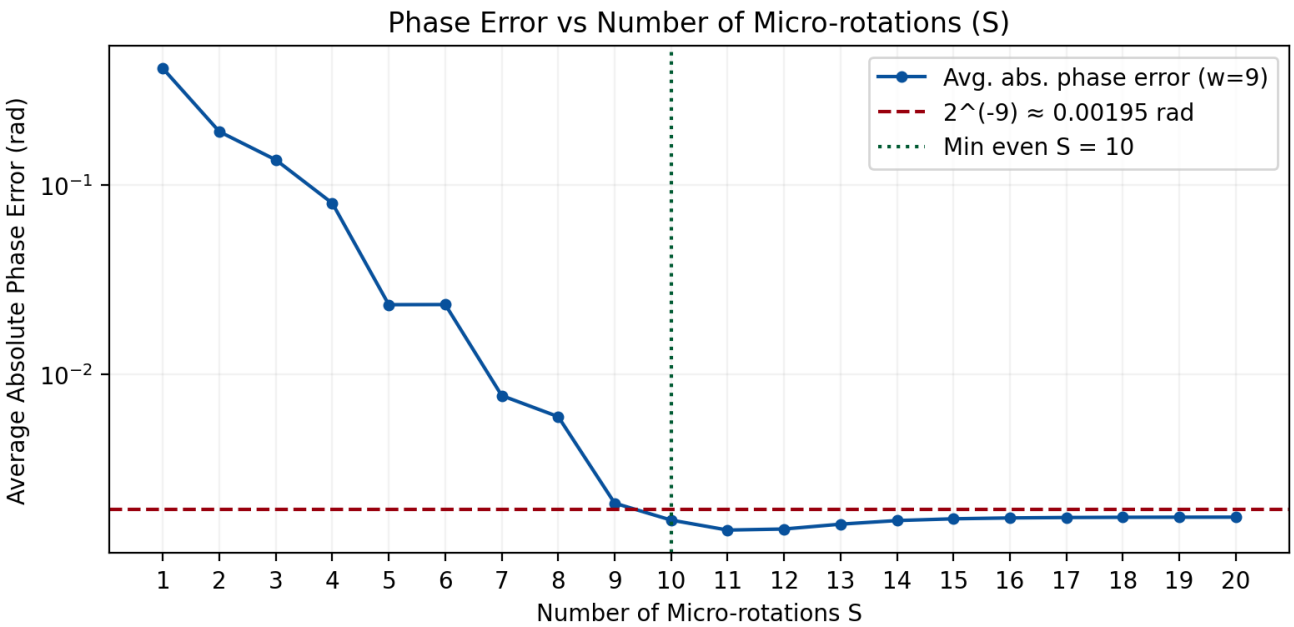

Figure 3.1: Enter Caption

From Figure 3.2, the minimum word length satisfying the error requirement is 8 bits. However, as will be shown in the subsequent analysis, adopting 8-bit representation for the elementary angles implies that the phase accumulator and the initialization compensation value π are also represented in 8 bits, which leads to excessive phase accumulation error that fails to meet the error threshold. **Therefore, a word length of 10 bits is adopted in this work.**

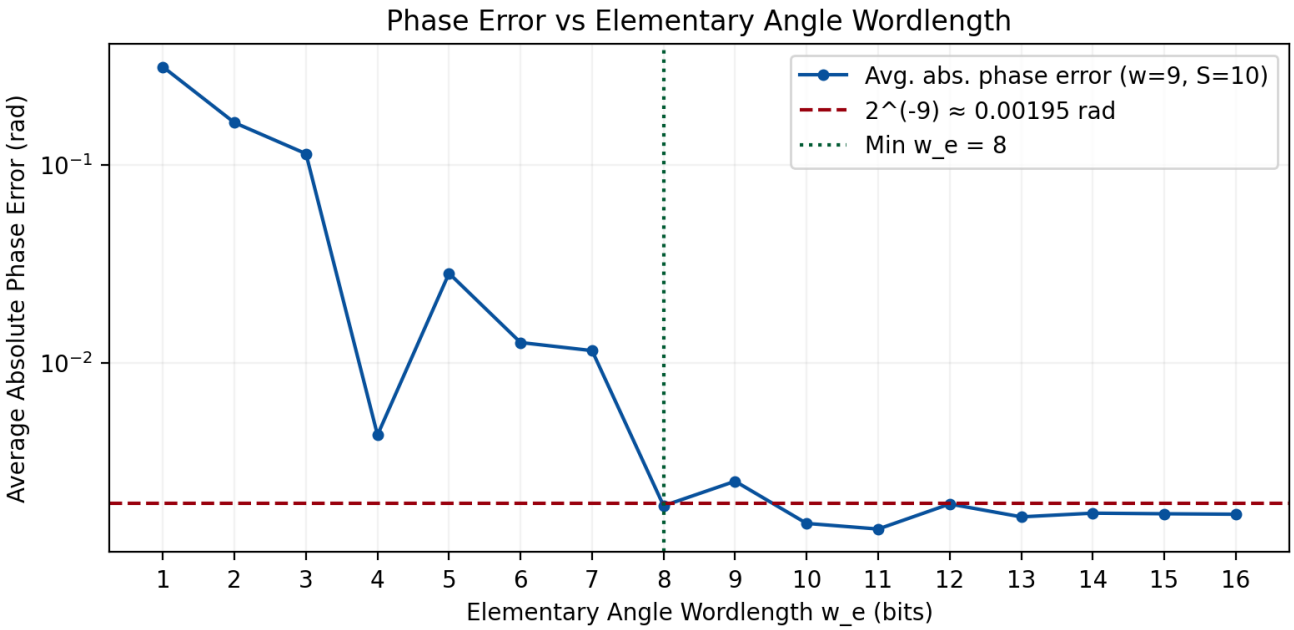

Figure 3.2: Enter Caption

The elementary angles are represented in a fixed-point format of 1S-2I-10F. The reason two integer bits are required is to align with the magnitude of Theta, since Theta ranges from -π to π as determined by the atan2 function, two integer bits are necessary to accommodate this range.

Table 3.1: Elementary Angle LUT

i	Floating-Point	Fixed-Point (Binary)
0	0.7853981634	0 00 1100100100
1	0.4636476090	0 00 0111011011
2	0.2449786631	0 00 0011111011
3	0.1243549945	0 00 0001111111
4	0.0624188100	0 00 0001000000
5	0.0312398334	0 00 0000100000
6	0.0156237286	0 00 0000010000
7	0.0078123411	0 00 0000001000
8	0.0039062301	0 00 0000000100
9	0.0019531225	0 00 0000000010

Step 4 — Determine the number of micro rotations for magnitude function

4.1 Result 4 - Number of micro-rotations for magnitude function

Please show how you decide the number of micro-rotations for the magnitude function with error tolerance of 0.1%. (10%)

Step 5 — Determine the CSD of the scaling factor

5.1 Result 5 - CSD representation and shift-and-add block

Write a program to show the setting of fractional wordlength of CSD versus error. Draw the figure. (10%). Depict your design for the shift-and-add block according to your CSD representation. How many adders do you use? (10%)

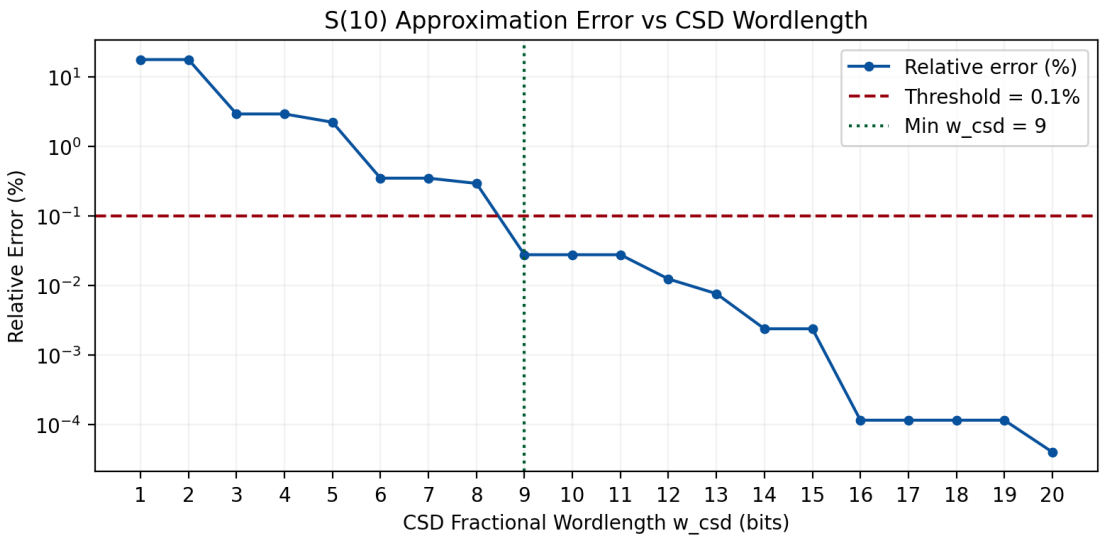

Figure 5.1: Enter Caption

The shift-and-add module needs **three adders.**

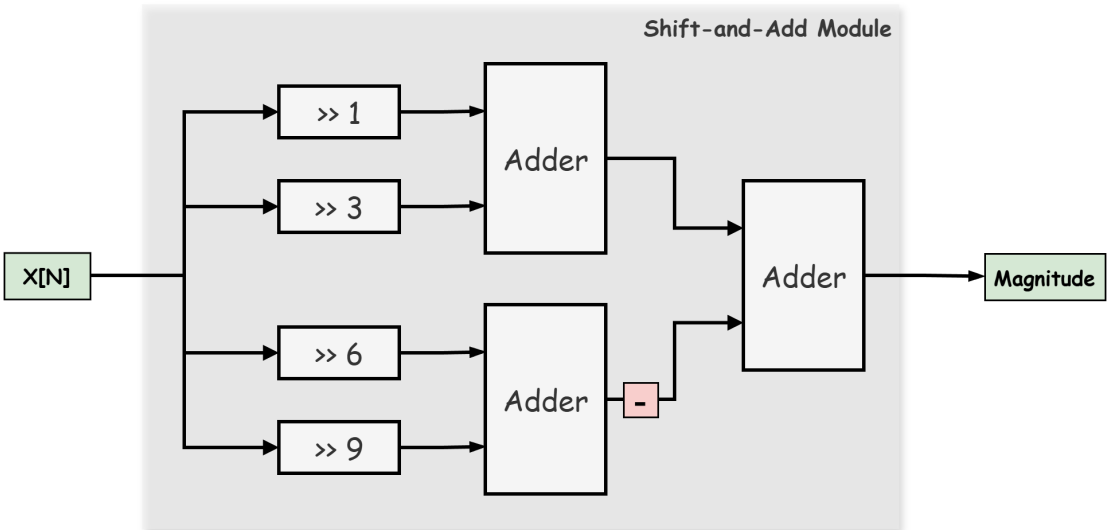

Figure 5.2: Enter Caption

Step 6 — Iterative architecture design

6.1 Result 6.1 - Initial stage design

Depict your design of the initial stage. Mark the word-length in the block diagram. (10%)

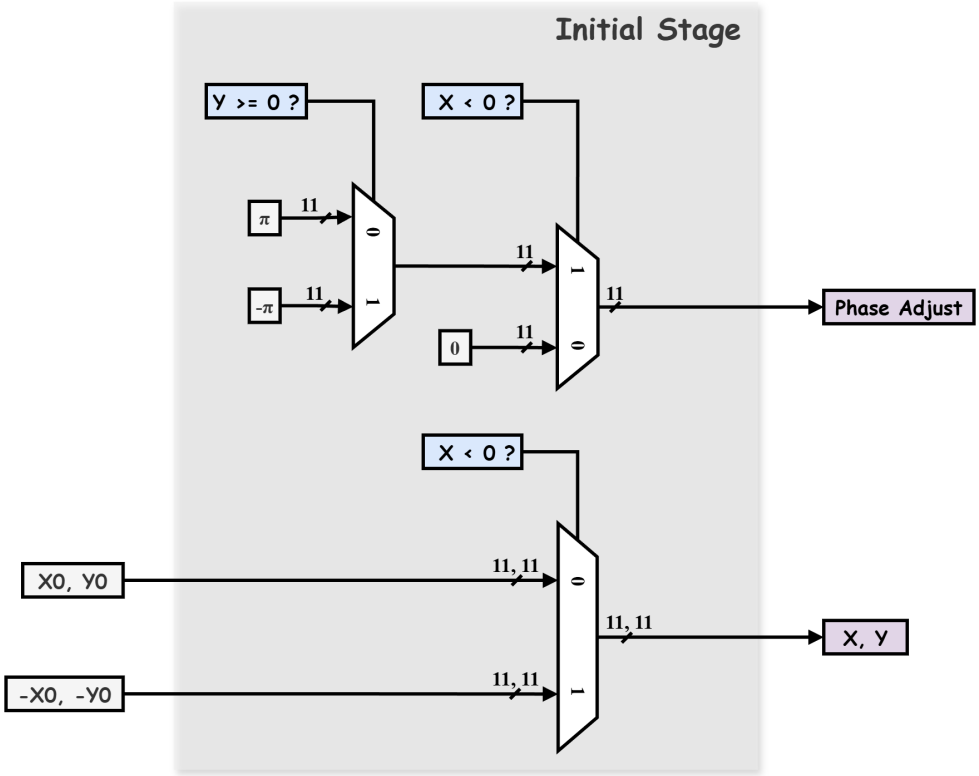

Figure 6.1: Enter Caption

6.2 Result 6.2 - Iterative architecture behavior simulation

Implement your design with only DFFs inserted at the inputs and outputs. Show the timing diagram of behavior simulation for four inputs. (15%) Compare the results with the arctangent function and draw the error versus index m to show that your implementation meets the precision requirements of error less than 2^{-9}. (10%)

Hardware Configuration Summary

The following table summarizes the hardware configuration derived from the analysis above.

Parameter	Bit-Width	Description	Error Analyzed
Input X and Y	1S-1I-9F	11-bit signed fixed-point	✓
Elementary Angle θ_e	1S-2I-8F	11-bit, matches θ range	✓
Accumulated Angle θ	1S-2I-8F	11-bit, matches fraction of θ_e	×
Initial Rotation Angle θ_i	1S-2I-8F	11-bit, matches θ_e and θ format	×
Number of Micro-Rotations	—	10 iterations	✓
Magnitude Output	1S-1I-9F	Matches input format	×

Table 6.1: Hardware Configuration Summary for CORDIC Design

Note that not all parameters listed above have been individually analyzed for error. Therefore, directly applying the hardware configuration above is insufficient to guarantee that the design meets the required error constraints, specifically, that the phase error of θ remains below 2^{-9} radians and that the magnitude error stays within 0.1%.

To address this, all relevant hardware parameters were incorporated into a Python simulation to determine the minimum configuration that satisfies both error thresholds. The resulting parameters are summarized in the table below.

Parameter	Bit-Width	Description
Input X and Y	1S-1I-12F	14-bit signed fixed-point
Elementary Angle	1S-2I-10F	13-bit, extended integer bits to cover angle range
Accumulated Angle θ	1S-2I-10F	Matches elementary angle format
Initial Rotation Angle	1S-2I-10F	Matches elementary angle and θ format
Number of Micro-Rotations	—	12 iterations
Magnitude Output	1S-1I-12F	Matches input format

Table 6.2: Minimum Hardware Configuration to Meet Error Constraints

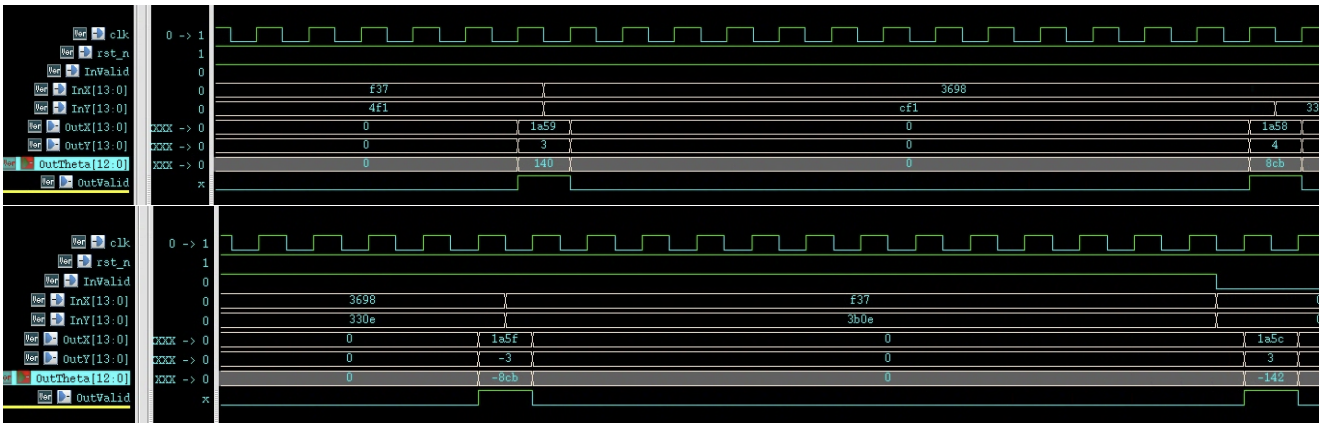

Figure 6.2: Enter Caption

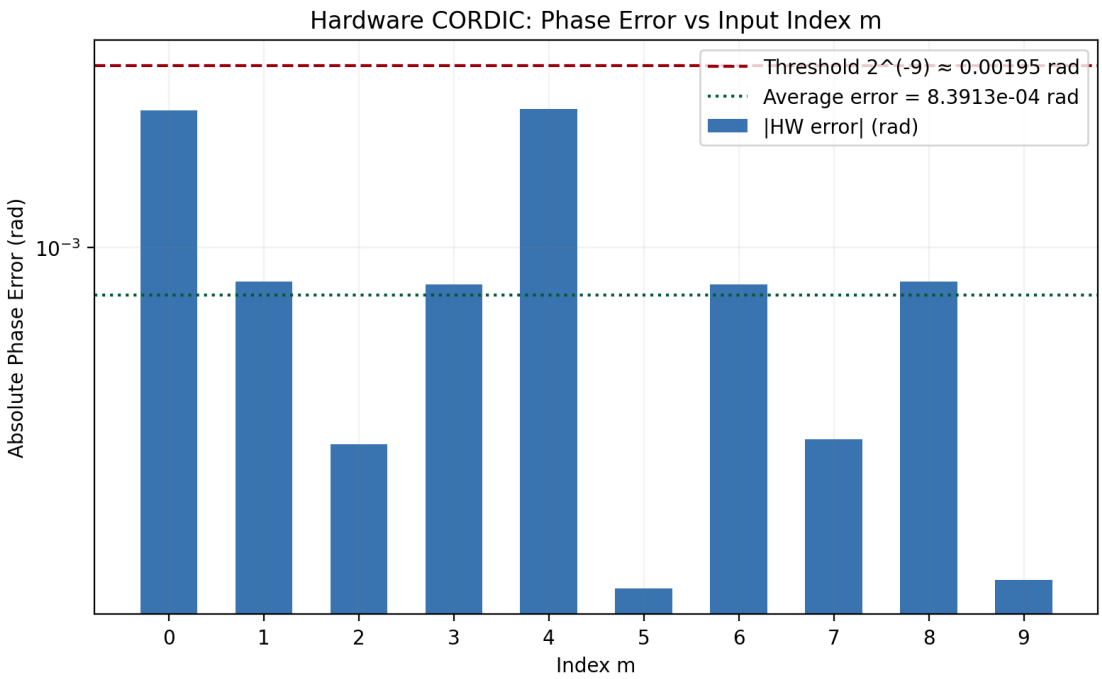

Figure 6.3: Enter Caption

Step 7 — Unfolding architecture design

7.1 Result 7 - Unfolding architecture

Draw the block diagram of your $\frac{S}{2}$-unfolding architecture. (10%). Show the timing diagram of behavior and post-synthesis simulation with correct setting of clock period and 10 inputs. (30%) Verified the error between the post-synthesis results and the floating-point arctangent results. Draw the error versus index m. (10%)

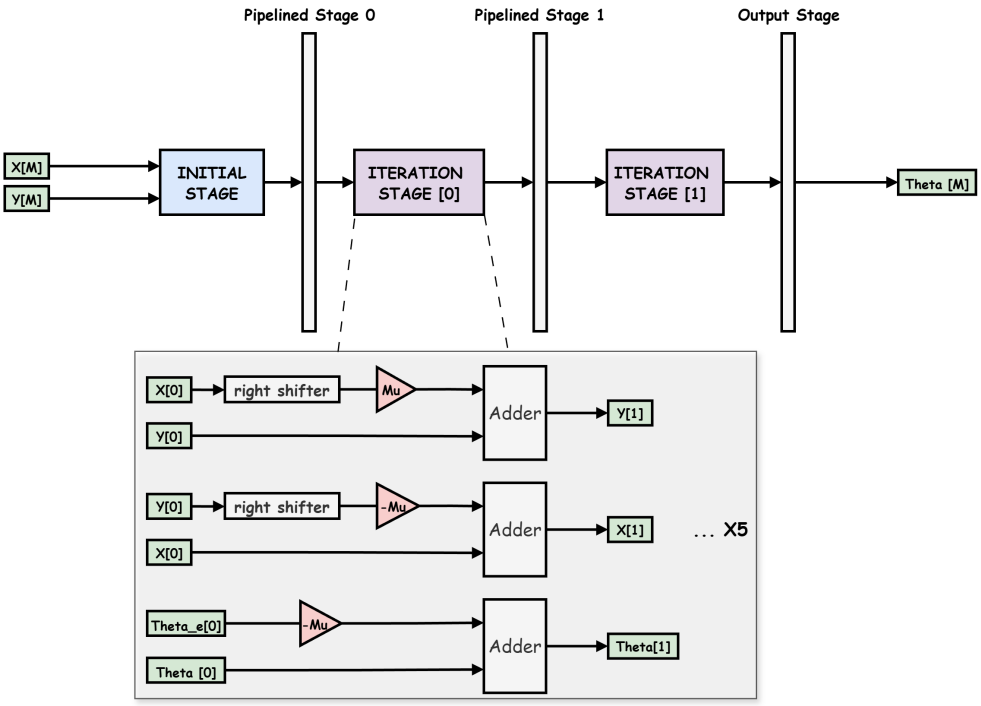

Figure 7.1: Enter Caption

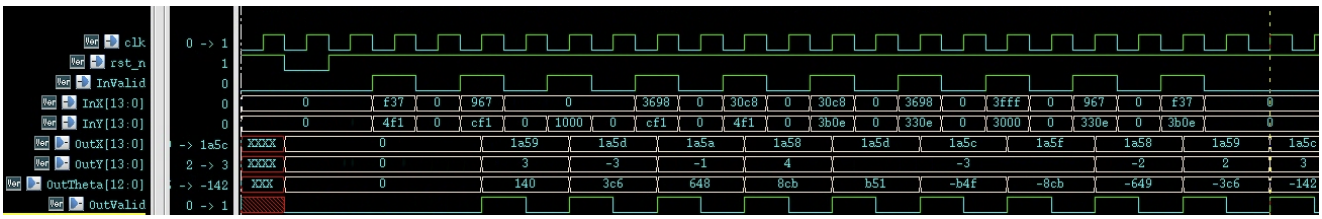

Figure 7.2: Enter Caption

Step 8 — Check area

8.1 Result 8 - Area comparison

Report and compare the area before and after unfolding. (10%)

Step 9 — Hardware architecture design

9.1 Result 9 - Architecture for magnitude function

Draw the shift-and-add module for the scaling factor (5%). Connect the shift-and-add module to your micro-rotation module, and calculate the magnitude function. Show the timing diagram of behavior simulation and post-synthesis simulation with proper setting of clock period. (15%). Verified the error between the post-synthesis results and the floating-point arctangent results. Draw the error versus index m. (10%)

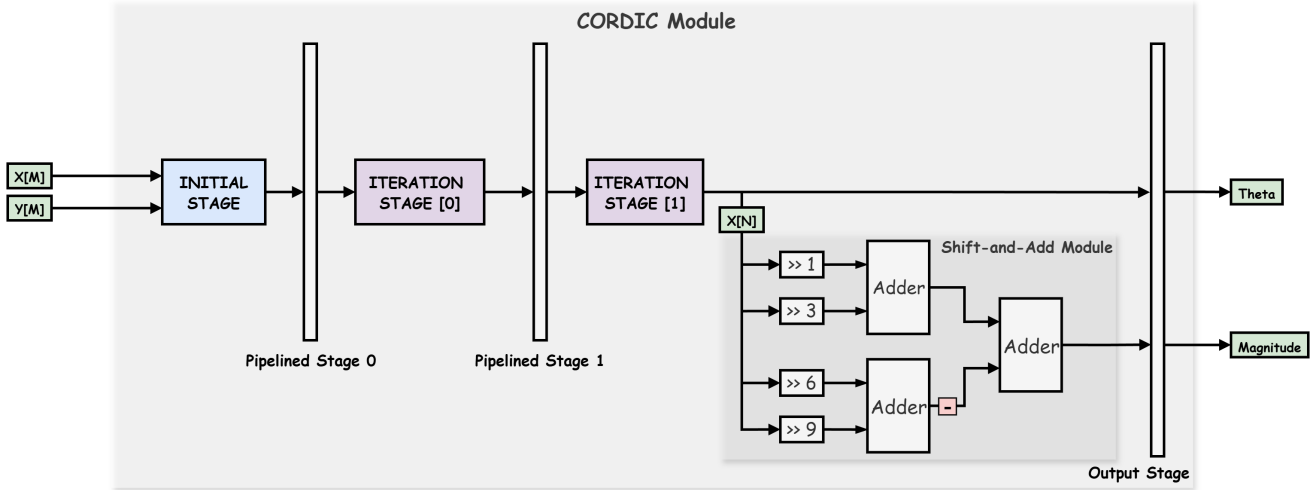

Figure 9.1: Enter Caption