DSP in VLSI

Homework 4

Coordinate Rotation Digital Computer (CORDIC)

Student ID

M11407439

Name

MING-HONG, LIN

Development Environment

HDL	SystemVerilog
Simulation Tools	Synopsys VCS and Verdi
Synthesis Tool	Synopsys DC Compiler
Process	TSMC 16nm (ADFP)
Verification	Python

Due Date: 2026/04/15

Contents

1 Step 1 — Realize CORDIC properties **2**
1.1 Result 1 - CORDIC scaling factor 2

2 Step 2 — Determine the word-length of fixed-point representation **3**
2.1 Result 2 - Word-length setting 3

3 Step 3 — Determine the number of micro rotations for arctangent function **4**
3.1 Result 3 - Micro-rotations and elementary angles 4

4 Step 4 — Determine the number of micro rotations for magnitude function **6**
4.1 Result 4 - Number of micro-rotations for magnitude function 6

5 Step 5 — Determine the CSD of the scaling factor **7**
5.1 Result 5 - CSD representation and shift-and-add block 7

6 Step 6 — Iterative architecture design **8**
6.1 Result 6.1 - Initial stage design 8
6.2 Result 6.2 - Iterative architecture behavior simulation 9

7 Step 7 — Unfolding architecture design **11**
7.1 Result 7 - Unfolding architecture 11

8 Step 8 — Check area **13**
8.1 Result 8 - Area comparison 13

9 Step 9 — Hardware architecture design **14**
9.1 Result 9 - Architecture for magnitude function 14

Step 1 — Realize CORDIC properties

1.1 Result 1 - CORDIC scaling factor

Please draw the figure showing $S(N)$ *versus* N for $N = 1 \ldots 30$. (5%)

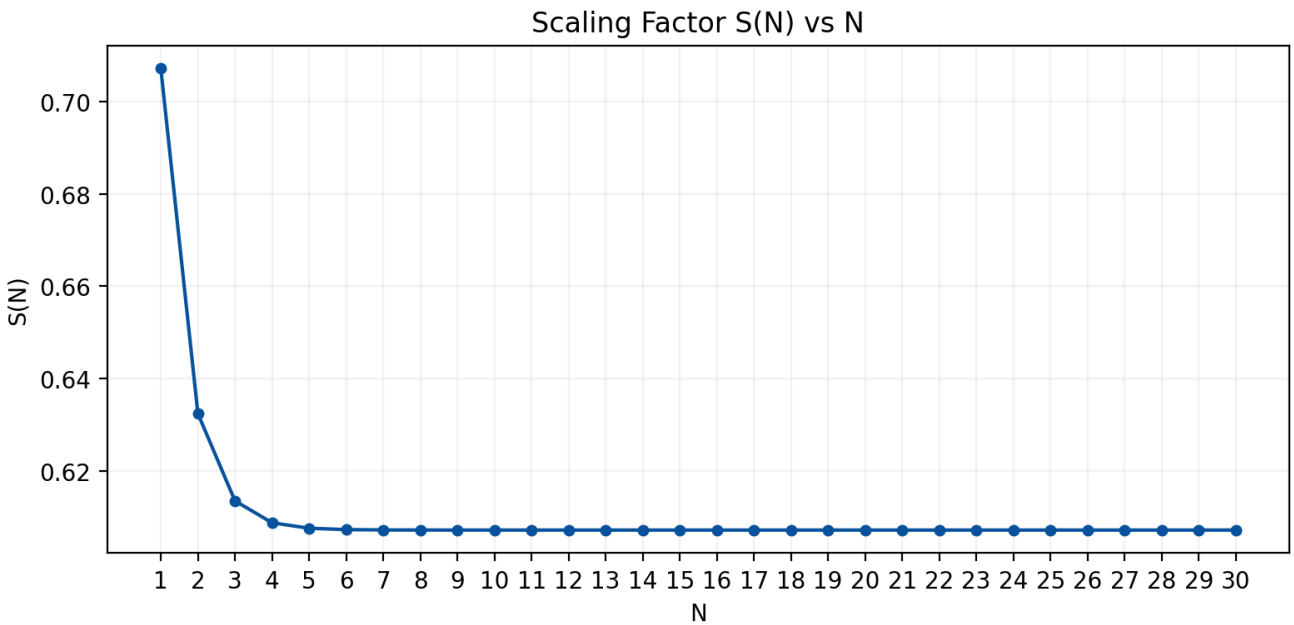

Figure 1.1: Scaling Factor $S(N)$ versus Number of Micro-Rotations N for $N = 1 \ldots 30$

Step 2 — Determine the word-length of fixed-point representation

2.1 Result 2 - Word-length setting

Draw the figure of average absolute error versus fractional wordlength (10%) to show how you determine the setting of word-length of the fractional part. Write down the integer word-length of $X(i)$ and $Y(i)$ that you use all the stages. Please explain it. (5%)

From Figure 1.1, we can observe that after more than 4 micro-rotation iterations, S(N) saturates at approximately 0.6, implying that the scaling factor K(N) accumulated through micro-rotations converges to roughly 1.6. Therefore, in addition to the minimum of 9 fractional bits required as indicated by Figure 2.1, one integer bit and one sign bit must also be included, **bringing the total fixed-point representation to 11 bits.**

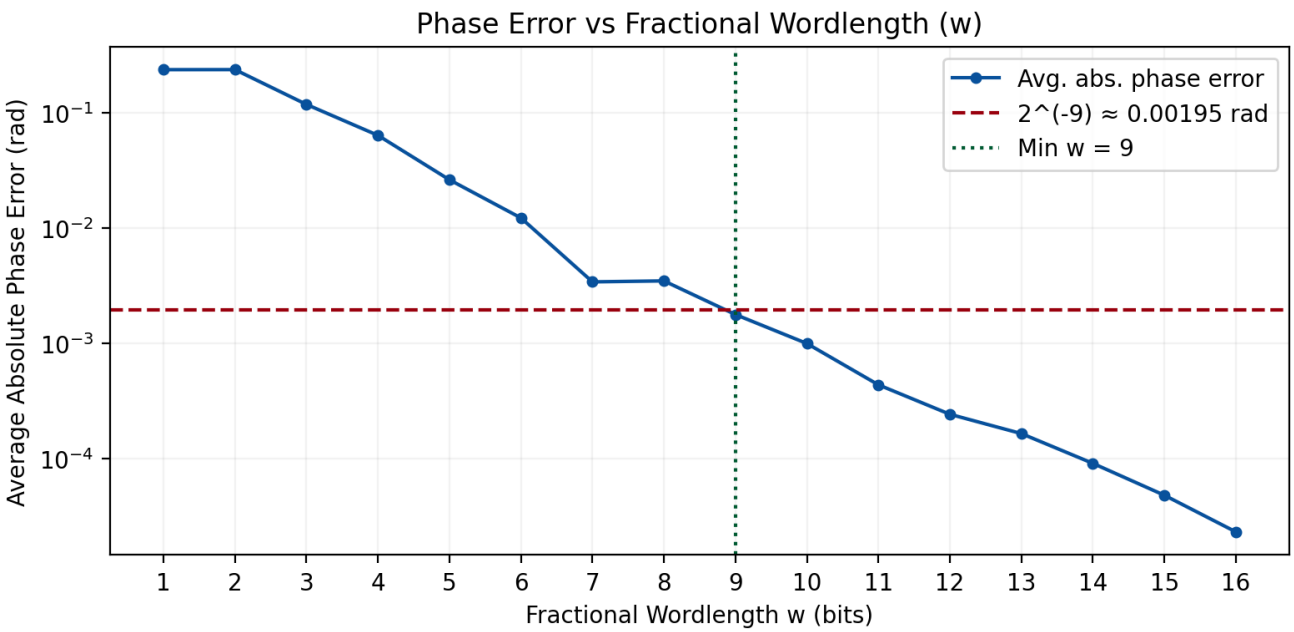

Figure 2.1: Average Absolute Phase Error versus Fractional Wordlength w

Step 3 — Determine the number of micro rotations for arctangent function

3.1 Result 3 - Micro-rotations and elementary angles

Please draw a figure to denote the average phase errors of 10 quantized input pairs (X, Y) versus different numbers of micro-rotations S (10%) and draw a figure to show the resulted phase errors of 10 quantized input pairs versus the word-length of quantized elementary angles (10%). Explain your selection to satisfy the averaged error criterion of 2^{-9} radian. Also list a table of the elementary angles (both in floating-point representation and binary fixed-point representation). (5%)

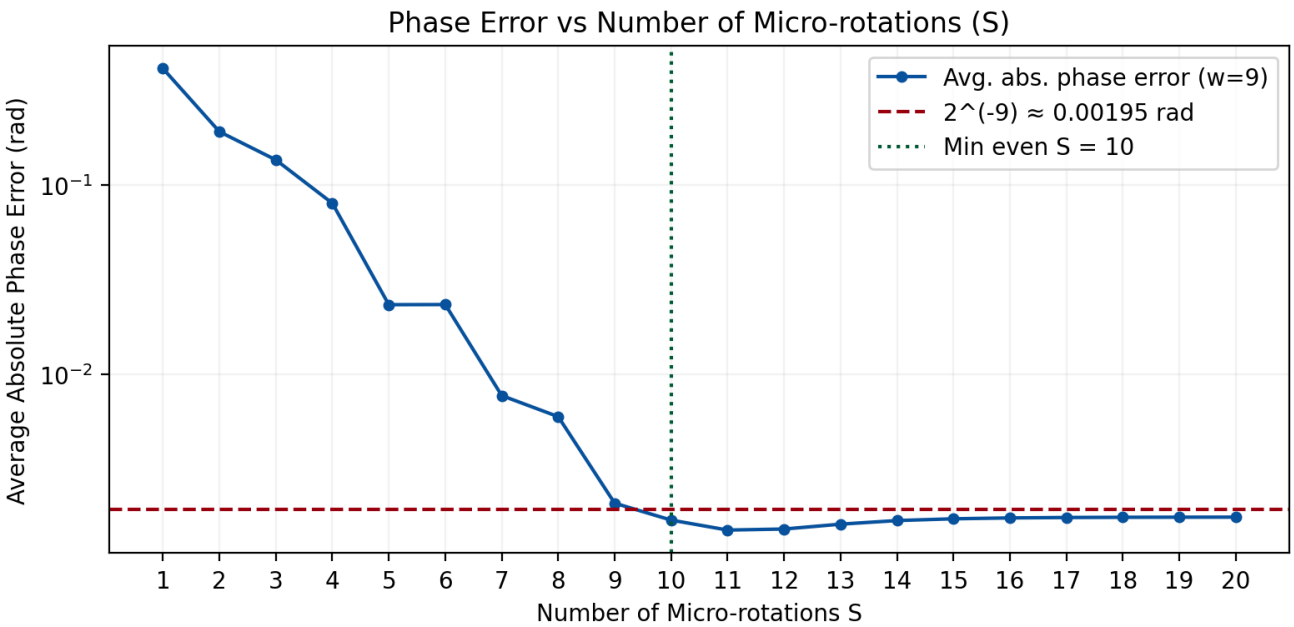

Figure 3.1: Average Phase Error of 10 Quantized Input Pairs versus Number of Micro-Rotations S

From Figure 3.2, the minimum word length satisfying the error requirement is 8 bits. However, as will be shown in the subsequent analysis, adopting 8-bit representation for the elementary angles implies that the phase accumulator and the initialization compensation value π are also represented in 8 bits, which leads to excessive phase accumulation error that fails to meet the error threshold. **Therefore, a word length of 10 bits is adopted in this work.**

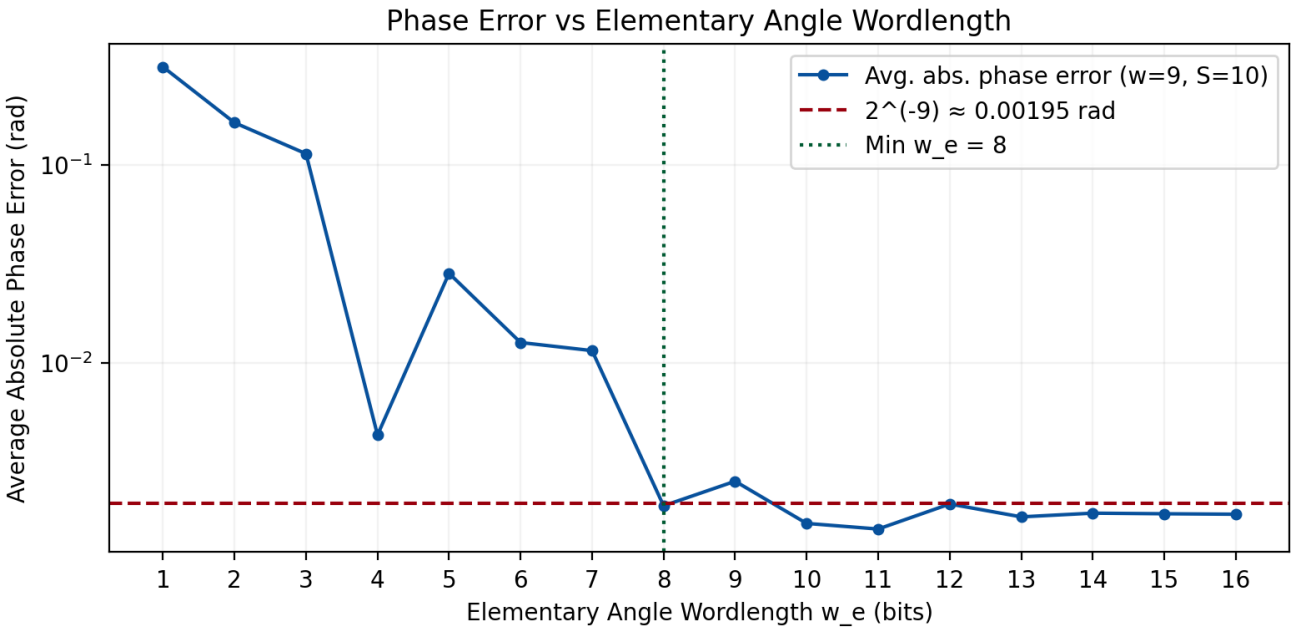

Figure 3.2: Average Phase Error of Quantized Elementary Angles

The elementary angles are represented in a fixed-point format of 1S-2I-10F. The reason two integer bits are required is to align with the magnitude of Theta, since Theta ranges from -π to π as determined by the atan2 function, two integer bits are necessary to accommodate this range.

Table 3.1: Elementary Angle LUT

i	Floating-Point	Fixed-Point (Binary)
0	0.7853981634	0 00 1100100100
1	0.4636476090	0 00 0111011011
2	0.2449786631	0 00 0011111011
3	0.1243549945	0 00 0001111111
4	0.0624188100	0 00 0001000000
5	0.0312398334	0 00 0000100000
6	0.0156237286	0 00 0000010000
7	0.0078123411	0 00 0000001000
8	0.0039062301	0 00 0000000100
9	0.0019531225	0 00 0000000010

Step 4 — Determine the number of micro rotations for magnitude function

4.1 Result 4 - Number of micro-rotations for magnitude function

---

Please show how you decide the number of micro-rotations for the magnitude function with error tolerance of 0.1%. (10%)

From Eq. (11) in the homework specification, the relative error of approximating the magnitude function using N micro-rotations is bounded by

$$\frac{|X + jY| - S(N)\,X(N)}{|X + jY|} = 1 - \cos\big(\theta'(N)\big) \tag{4.1}$$

where $\theta'(N)$ is the residual phase after N micro-rotations. Since $\theta'(N)$ must be smaller than the last elementary angle $\theta_e(N-1) = \tan^{-1}(2^{-(N-1)})$, the error upper bound becomes (Eq. 12):

$$\text{Error} < 1 - \cos\big(\theta_e(N-1)\big) = 1 - \frac{1}{\sqrt{1 + 2^{-2(N-1)}}} \tag{4.2}$$

Imposing the 0.1% ($= 10^{-3}$) tolerance and solving directly for N:

$$\begin{aligned}
1 - \frac{1}{\sqrt{1 + 2^{-2(N-1)}}} &< 10^{-3} \\
\frac{1}{\sqrt{1 + 2^{-2(N-1)}}} &> 1 - 10^{-3} \\
1 + 2^{-2(N-1)} &< \frac{1}{(1 - 10^{-3})^2} \\
2^{-2(N-1)} &< \frac{1}{(0.999)^2} - 1 \approx 2.003 \times 10^{-3} \\
-2(N-1) &< \log_2\big(2.003 \times 10^{-3}\big) \approx -8.96 \\
N - 1 &> 4.48 \\
N &> 5.48
\end{aligned} \tag{4.3}$$

Since N must be a positive integer, $\mathbf{N}_{\text{min}} = \mathbf{6}$. **Therefore, a minimum of 6 micro-rotations is required to meet the 0.1% error tolerance for the magnitude function.**

Step 5 — Determine the CSD of the scaling factor

5.1 Result 5 - CSD representation and shift-and-add block

Write a program to show the setting of fractional wordlength of CSD versus error. Draw the figure. (10%). Depict your design for the shift-and-add block according to your CSD representation. How many adders do you use? (10%)

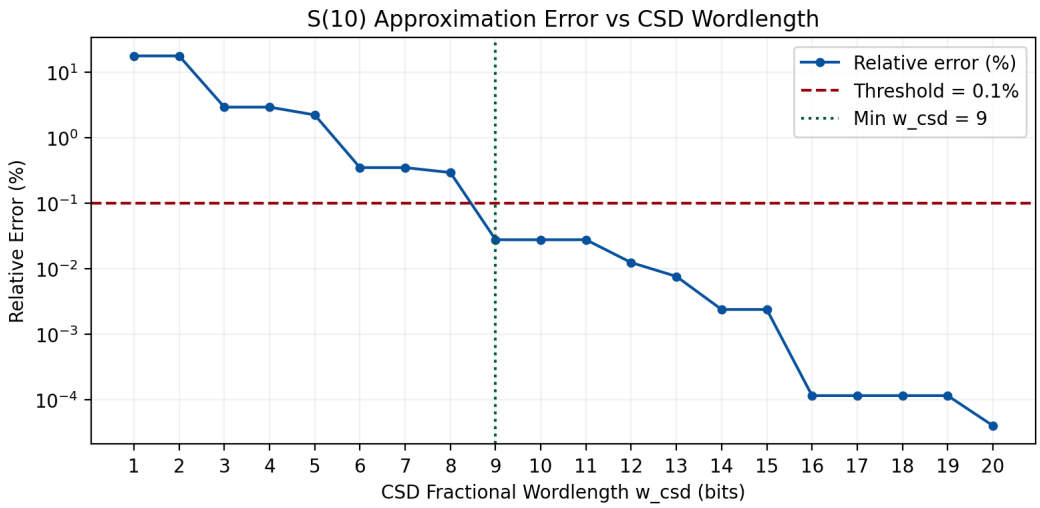

Figure 5.1: Scaling Factor Approximation Error versus Fractional Wordlength of CSD Representation

To satisfy the 0.1% error tolerance, the scaling factor $S(N)$ is converted to the CSD sequence $(0.10100100\bar{1})_{\text{CSD}}$ with a 9-bit fractional wordlength. This corresponds to $2^{-1} + 2^{-3} + 2^{-6} - 2^{-9}$. Since this expression contains 4 non-zero terms, the shift-and-add module requires exactly **3 adders**, matching the architecture in Figure 5.2.

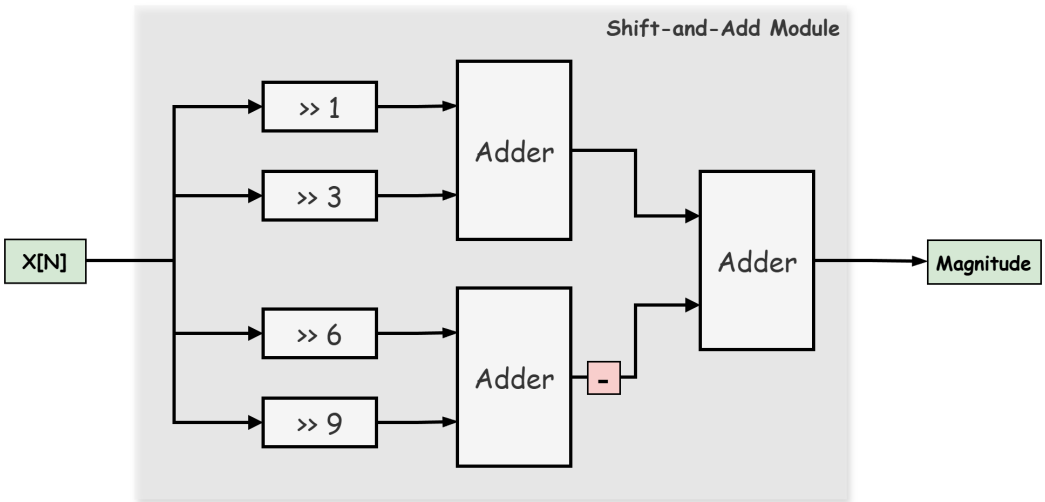

Figure 5.2: Shift-and-Add Block Diagram for Scaling Factor $S(N)$ Using CSD Representation

Step 6 — Iterative architecture design

6.1 Result 6.1 - Initial stage design

Depict your design of the initial stage. Mark the word-length in the block diagram. (10%)

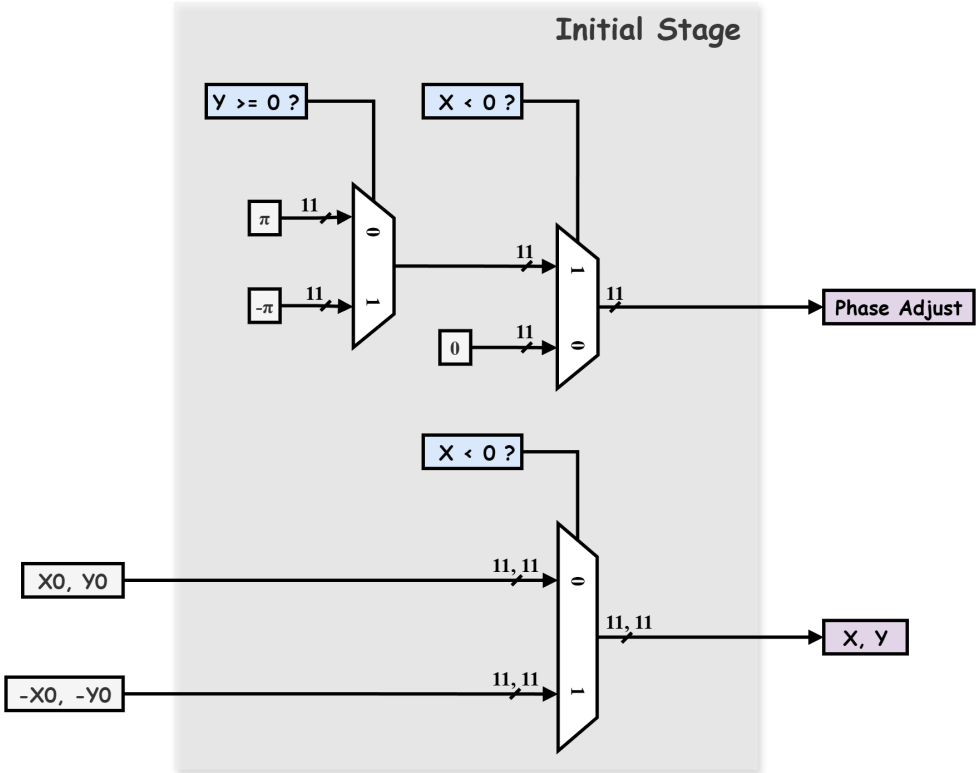

Figure 6.1: Block Diagram of the Initial Stage with Word-Length Annotations

6.2 Result 6.2 - Iterative architecture behavior simulation

Implement your design with only DFFs inserted at the inputs and outputs. Show the timing diagram of behavior simulation for four inputs. (15%) Compare the results with the arctangent function and draw the error versus index m to show that your implementation meets the precision requirements of error less than 2^{-9}. (10%)

Hardware Configuration Summary

The following table summarizes the hardware configuration derived from the analysis above.

Parameter	Bit-Width	Description	Error Analyzed
Input X and Y	1S-1I-9F	11-bit signed fixed-point	✓
Elementary Angle θ_e	1S-2I-8F	11-bit, matches θ range	✓
Accumulated Angle θ	1S-2I-8F	11-bit, matches fraction of θ_e	×
Initial Rotation Angle θ_i	1S-2I-8F	11-bit, matches θ_e and θ format	×
Number of Micro-Rotations	—	10 iterations	✓
Magnitude Output	1S-1I-9F	Matches input format	×

Table 6.1: Hardware Configuration Summary for CORDIC Design

Note that not all parameters listed above have been individually analyzed for error. Therefore, directly applying the hardware configuration above is insufficient to guarantee that the design meets the required error constraints, specifically, that the phase error of θ remains below 2^{-9} radians and that the magnitude error stays within 0.1%.

To address this, all relevant hardware parameters were incorporated into a Python simulation to determine the minimum configuration that satisfies both error thresholds. The resulting parameters are summarized in the table below.

Parameter	Bit-Width	Description
Input X and Y	1S-1I-12F	14-bit signed fixed-point
Elementary Angle	1S-2I-10F	13-bit, extended integer bits to cover angle range
Accumulated Angle θ	1S-2I-10F	Matches elementary angle format
Initial Rotation Angle	1S-2I-10F	Matches elementary angle and θ format
Number of Micro-Rotations	—	12 iterations
Magnitude Output	1S-1I-12F	Matches input format

Table 6.2: Minimum Hardware Configuration to Meet Error Constraints

Therefore, in the following implementation, I will adopt the parameters from Table 6.2 rather than Table 6.1 to ensure **compliance with the error threshold**.

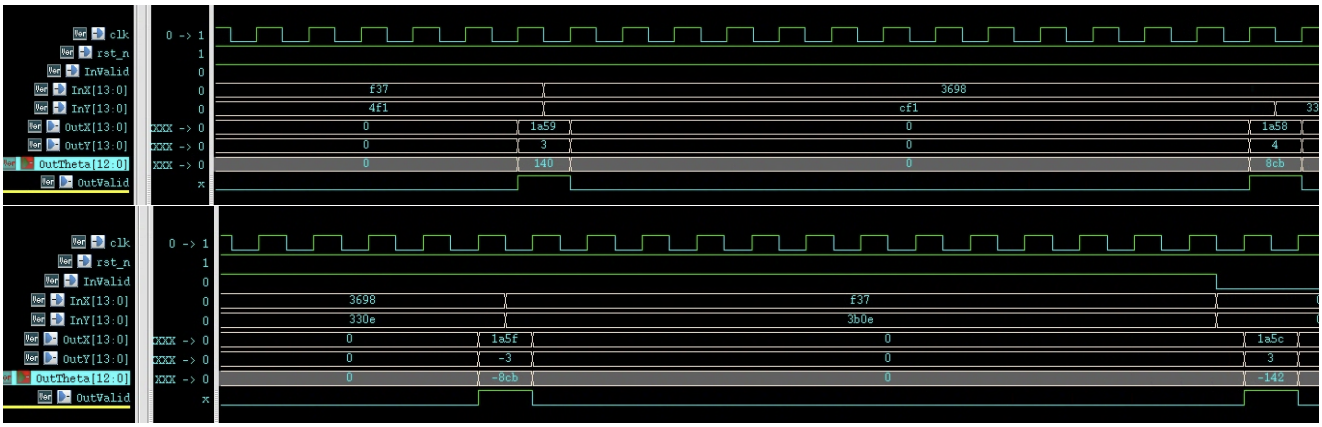

Figure 6.2: Behavior Simulation Timing Diagram of Iterative CORDIC Architecture (Four Inputs)

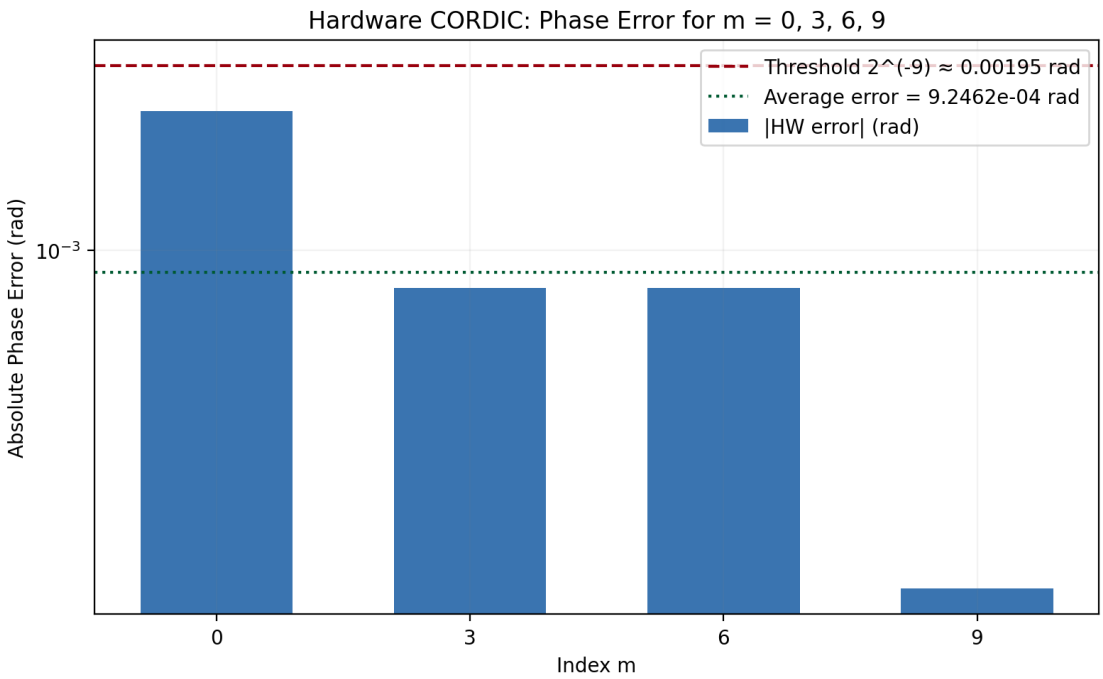

Figure 6.3: Phase Error versus Input Index m — Iterative CORDIC Architecture

Step 7 — Unfolding architecture design

7.1 Result 7 - Unfolding architecture

Draw the block diagram of your $\frac{S}{2}$-unfolding architecture. (10%). Show the timing diagram of behavior and post-synthesis simulation with correct setting of clock period and 10 inputs. (30%) Verified the error between the post-synthesis results and the floating-point arctangent results. Draw the error versus index m. (10%)

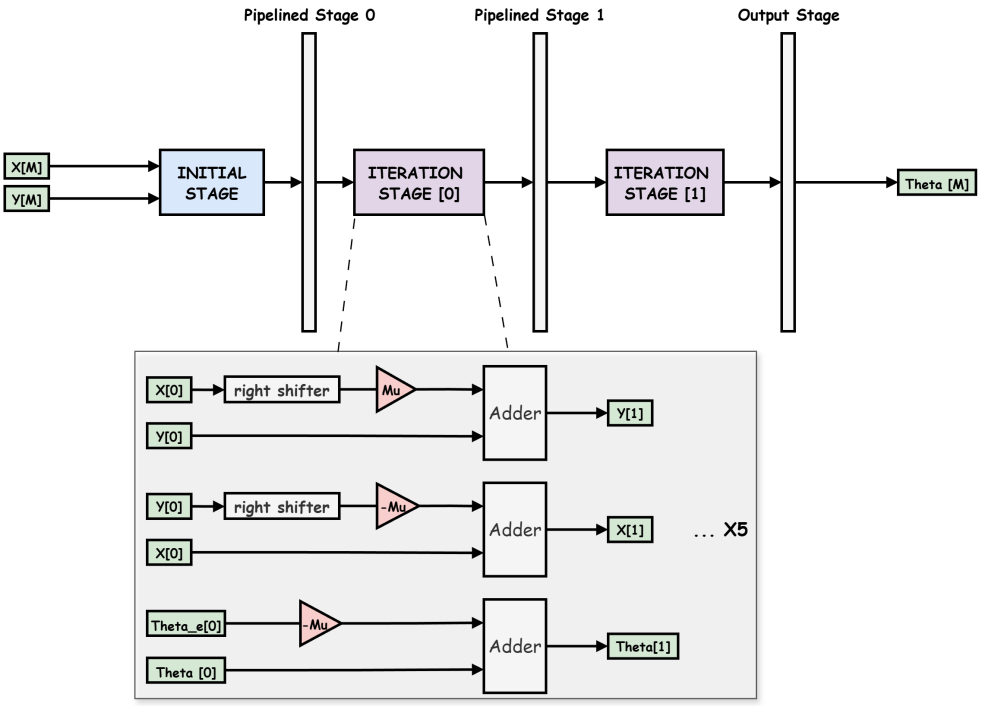

Figure 7.1: Block Diagram of the $\frac{S}{2}$-Unfolding CORDIC Architecture

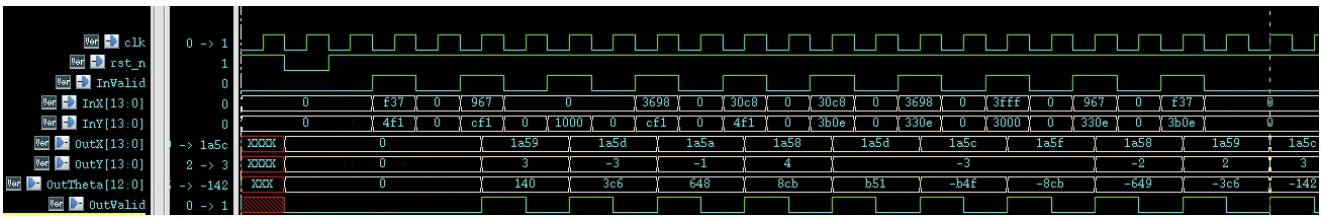

Figure 7.2: Behavior Simulation Timing Diagram of Unfolding CORDIC Architecture (10 Inputs)

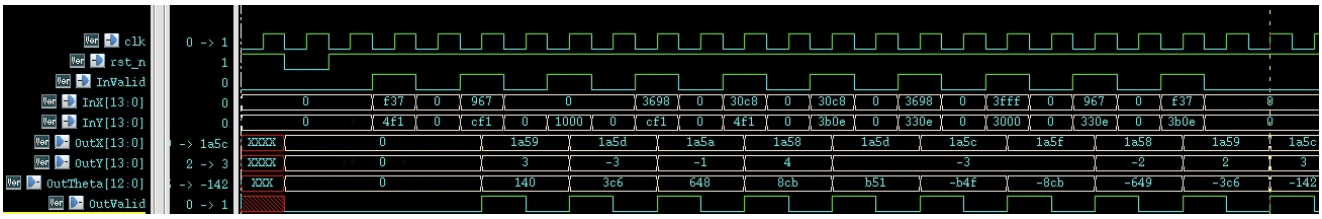

Figure 7.3: Post-Synthesis Simulation Timing Diagram of Unfolding CORDIC Architecture (10 Inputs)

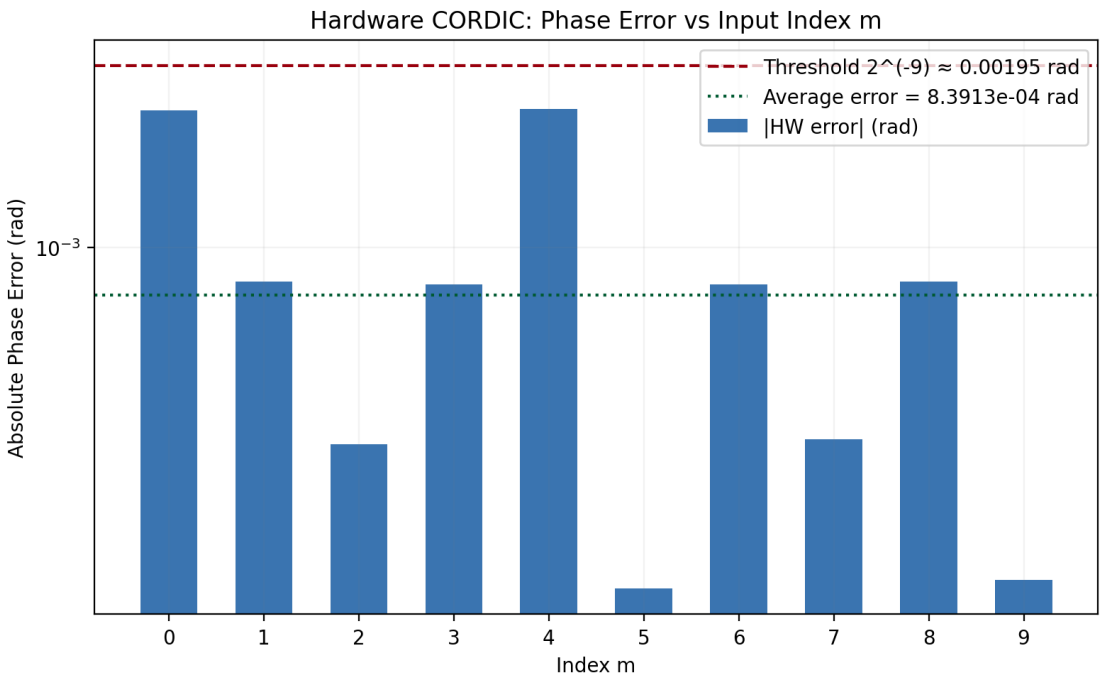

Figure 7.4: Phase Error versus Input Index m — Unfolding Architecture (Post-Synthesis)

Step 8 — Check area

8.1 Result 8 - Area comparison

Report and compare the area before and after unfolding. (10%)

Table 8.1: Area Comparison Before and After Unfolding

Architecture	**Clock Frequency**	**Total Cell Area (μm^2)**
Folding (Iterative)	200 MHz	284.24
Unfolding + Pipeline	200 MHz	763.91
Area Overhead	—	**×2.69**

The unfolding architecture achieves the same clock frequency of 200 MHz but increases the total cell area by approximately 2.69× compared to the folding (iterative) design. This overhead is expected, as unfolding replicates the datapath to process multiple samples per cycle, trading area for higher throughput.

Step 9 — Hardware architecture design

9.1 Result 9 - Architecture for magnitude function

Draw the shift-and-add module for the scaling factor (5%). Connect the shift-and-add module to your micro-rotation module, and calculate the magnitude function. Show the timing diagram of behavior simulation and post-synthesis simulation with proper setting of clock period. (15%). Verified the error between the post-synthesis results and the floating-point arctangent results. Draw the error versus index m. (10%)

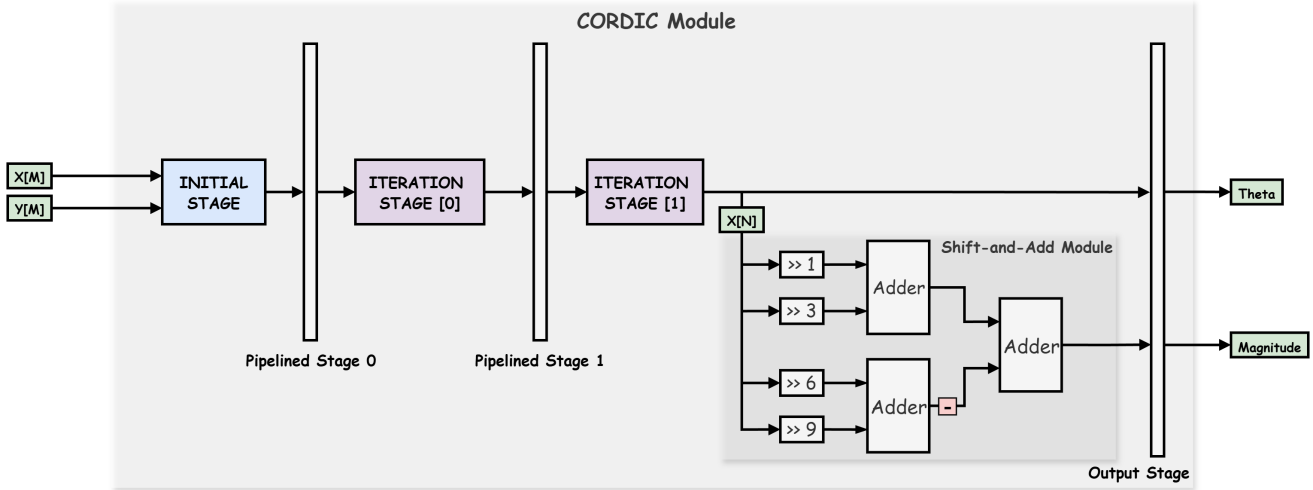

Figure 9.1: Complete CORDIC Architecture Block Diagram Including Initial Stage and Scaling Stage

Table 9.1: Synthesis Timing Constraint Summary (Clock Period = 1.0 ns, 1 GHz)

Constraint	**Value**	**Remark**
Clock Period	1.0 ns	1 GHz target frequency
Clock Latency	0.5 ns	`set_clock_latency`
Setup Uncertainty	0.1 ns	`set_clock_uncertainty -setup`
Hold Uncertainty	0.005 ns	`set_clock_uncertainty -hold`
Input Delay	0.5 ns	50% of clock period
Output Delay	0.5 ns	50% of clock period
Effective Setup Budget	0.9 ns	Period – Setup Uncertainty

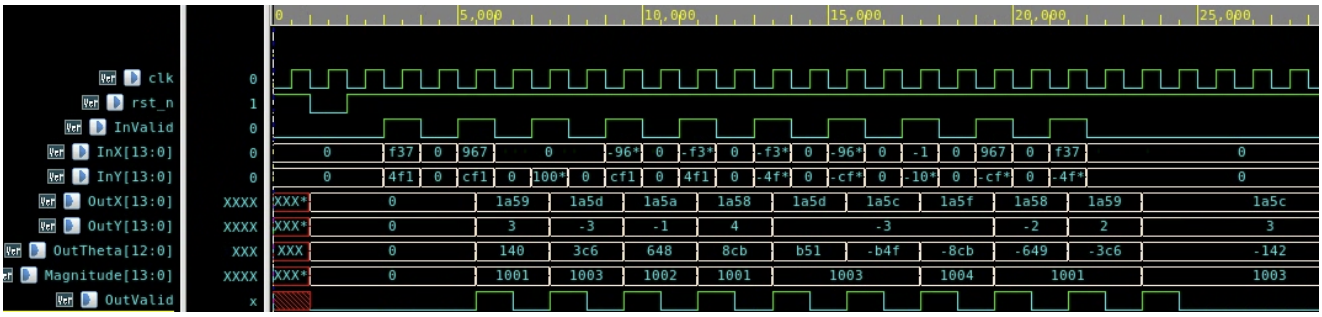

Figure 9.2: Behavior Simulation — Final CORDIC with Magnitude Output

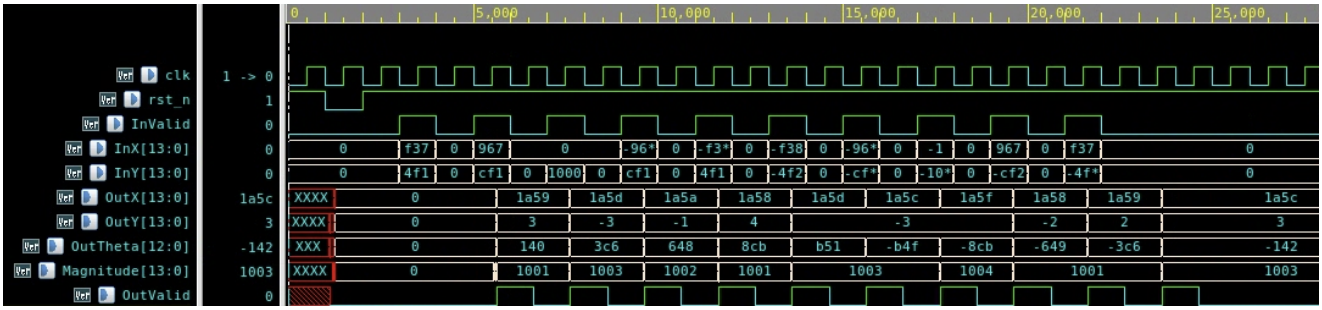

Figure 9.3: Gate-Level (Post-Synthesis) Simulation — Final CORDIC with Magnitude Output

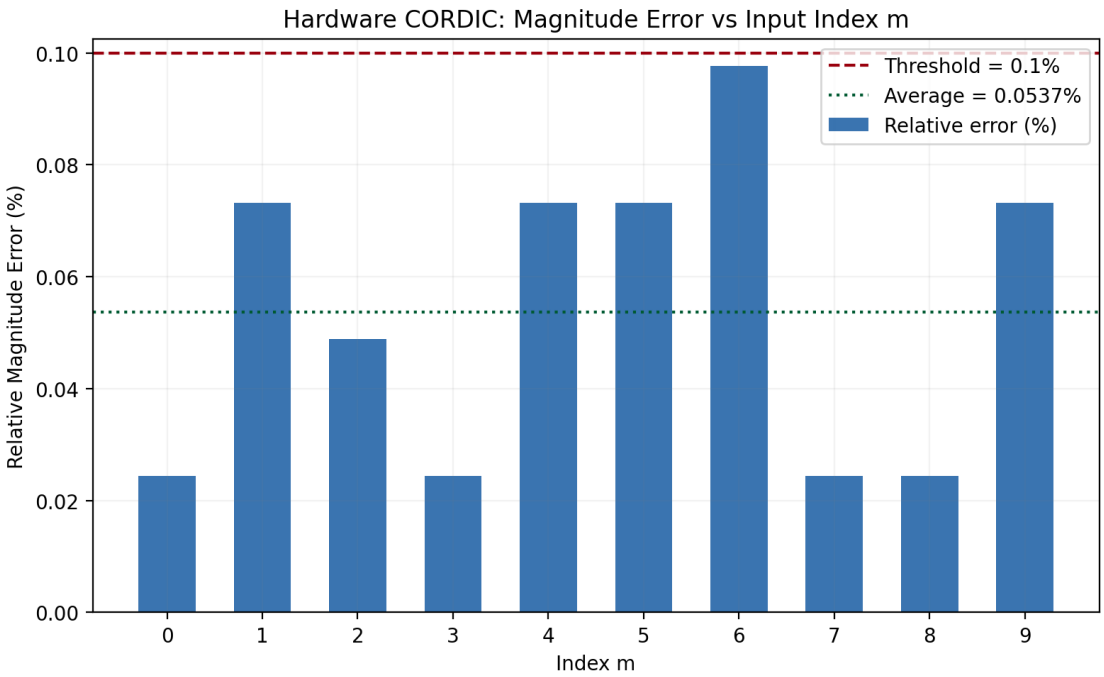

Figure 9.4: MagnitudeError versus Input Index m — Final CORDIC with Magnitude Output (Post-Synthesis)