DSP in VLSI

Homework 1

Sorter

Student ID

M11407439

Name

MING-HONG, LIN

Development Environment

HDL	Verilog HDL
EDA Tool	Vivado
Verification	Python

Due Date: 2026/03/18

Contents

1 Procedure 1 — Testbench Generation **2**
1.1 Testbench Input Generation 2

2 Procedure 2 — Sort8 Implementation **3**

3 Procedure 3 — SelectTopK Implementation **4**
3.1 Block Diagram and Calculation 5
3.2 Timing Diagram and Verification 6

4 Procedure 4 — Full Timing Verification **7**
4.1 Timing Diagram 7

5 Procedure 5 — Python Verification **8**
5.1 Verification Following Procedure 4 8

6 Procedure 6 — Synthesis Report **9**
6.1 Component Count 9

Procedure 1 — Testbench Generation

First, generate several random sequences with 32 elements $[x_1\, x_2\, \ldots\, x_{32}]$ in a block between -256 and 255 as your test inputs and prepare as the testbench. **(10%)**

1.1 Testbench Input Generation

For design and verification convenience, instead of generating random sequences externally via Python or MATLAB, random values in the range of -256 to 255 are generated directly within the testbench using the expression **($random & 9'h1FF) - 256**, and simultaneously written to **Input.dat** for subsequent Python-based sorting result verification.

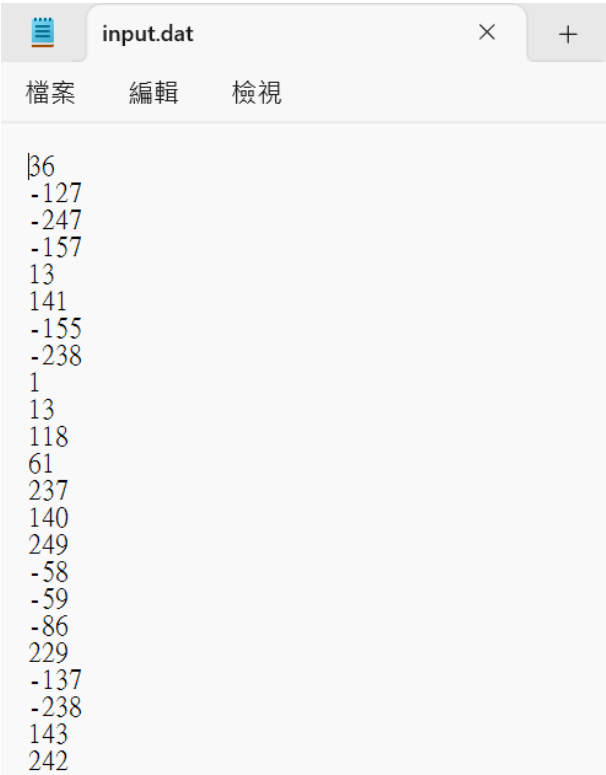

Figure 1.1: Content of Input.dat

Procedure 2 — Sort8 Implementation

Please use Verilog to implement **Sort8** with bitonic sorter revised from Fig. 4. Feed the 8 inputs $[x_1\, x_2\, \ldots\, x_8]$ simultaneously in one clock cycle. Observe the outputs to realize sorting among eight elements in one group. Use $[x_1\, x_2\, \ldots\, x_8]$ as the input and check for the correctness of the function "**Sort8**", which can generate sorted output from maximum to minimum. Indicate this function output in the timing diagram of your behavior simulation results. (If the data value inside the timing diagram can not be clearly seen, it will not be regarded as correct answers.) **(10%)**

Name	Value	0.000 ns	20.000 ns	40.000 ns	60.000 ns	80.000 ns	100.000 ns	120.000 ns
In[0:7][8:0]	-54,-196,242,13	36,-127,-2...	1,13,118,6...	-59,-86,22...	-24,-59,92...	-128,32,17...	107,-43,-2...	-54,-196,2...
[0][8:0]	-54	36	1	-59	-24	-128	107	-54
[1][8:0]	-196	-127	13	-86	-59	32	-43	-196
[2][8:0]	242	-247	118	229	92	170	-254	242
[3][8:0]	138	-157	61	-137	-67	-99	-82	138
[4][8:0]	65	13	237	-238	-211	-106	29	65
[5][8:0]	-40	141	140	143	-155	-237	-49	-40
[6][8:0]	120	-155	249	242	-157	-243	35	120
[7][8:0]	-119	-238	-58	-50	10	-173	10	-119
Out[0:7][8:0]	242,138,120,65	141,36,13,...	249,237,14...	242,229,14...	92,10,-24,...	170,32,-99...	107,35,29,...	242,138,12...
[0][8:0]	242	141	249	242	92	170	107	242
[1][8:0]	138	36	237	229	10	32	35	138
[2][8:0]	120	13	140	143	-24	-99	29	120
[3][8:0]	65	-127	118	-50	-59	-106	10	65
[4][8:0]	-40	-155	61	-59	-67	-128	-43	-40
[5][8:0]	-54	-157	13	-86	-155	-173	-49	-54
[6][8:0]	-119	-238	1	-137	-157	-237	-82	-119
[7][8:0]	-196	-247	-58	-238	-211	-243	-254	-196

Figure 2.1: Timing Diagram of Sort8 Behavior Simulation Results

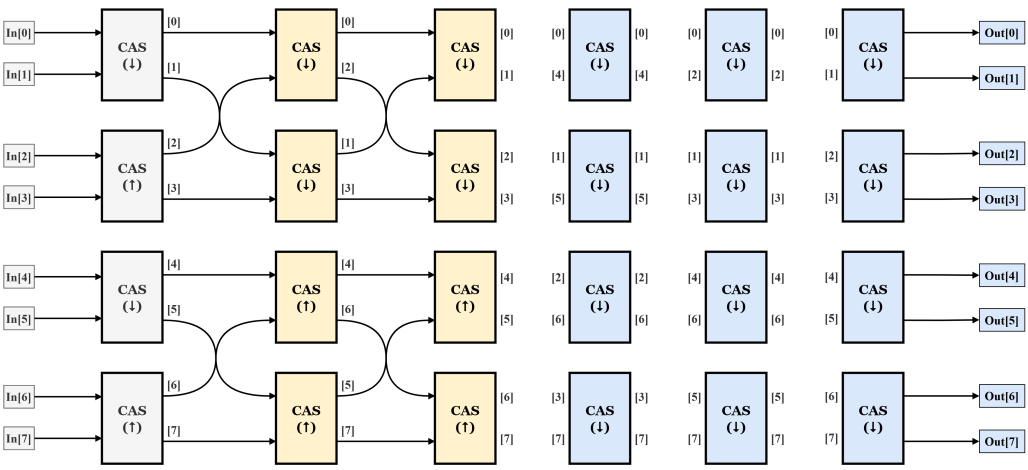

Figure 2.2: Block Diagram of Sort8

Procedure 3 — SelectTopK Implementation

Construct the module (**SelectTopK**) of merger sort to select top 4 among 32 input elements ($[x_1\ x_2\ x_3\ \ldots\ x_{32}]$) under your control. One example is given as in Fig. 5. Use a comparator tree to receive the sorted results from each group and then activate your comparator tree to select top 4 values. Maybe you need two sets of **Reg8** buffers, one for saving the outputs of the next block from Sort8, and the other for sending the contents of the current block to the comparator tree.

- Draw the block diagram of your own implementation and calculate the number of adders/subtractors/comparators in your block diagram. **(20%)**
- Show the timing diagram of your behavior simulation results. **(10%)**
- Show the hardware output is correct by comparing it to your Matlab (Python) results (It means you need to provide the correct answer from the command "sort" by yourself). **(10%)**

3.1 Block Diagram and Calculation

The Sort8 module uses a total of **24** comparators, and the bottom-level comparator stage requires an additional **3**, bringing the overall comparator count to **27**. As for adders, **3** are used : one for the Reg Counter that determines which register group to store the Sort8 output into, one for the Pointer adder, and one for the OutRank adder. No subtractors are required.

Comparators	Adders	Subtractors
27	3	0

Table 3.1: Component Count of SelectTopK Module

In this module, a Ping-Pong Buffer is employed to maintain high throughput. The first three register groups adopt a full Ping-Pong mechanism, while the last group can be written directly to the Pong Buffer without an additional Ping stage, since its data arrival timing naturally aligns with the output timing and no conflict arises. This allows continuous output of data from different blocks without introducing additional latency.

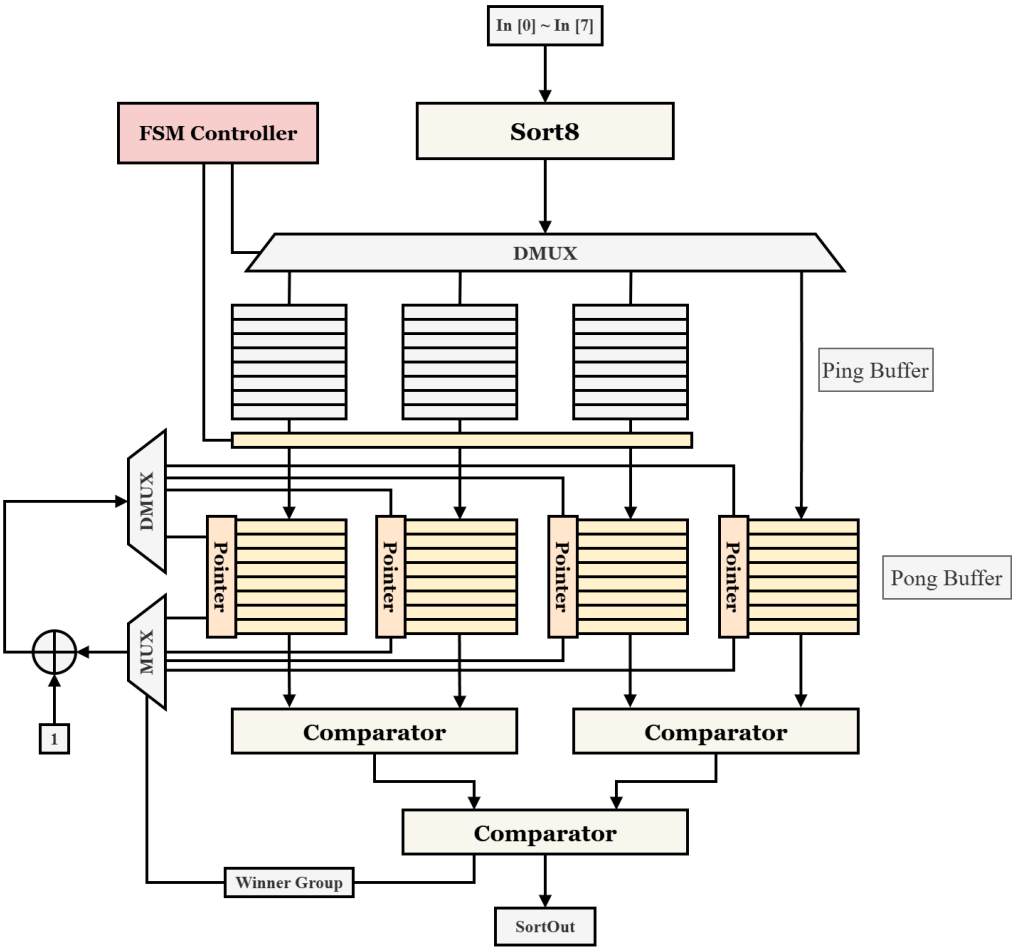

Figure 3.1: Block Diagram of SelectTopK

3.2 Timing Diagram and Verification

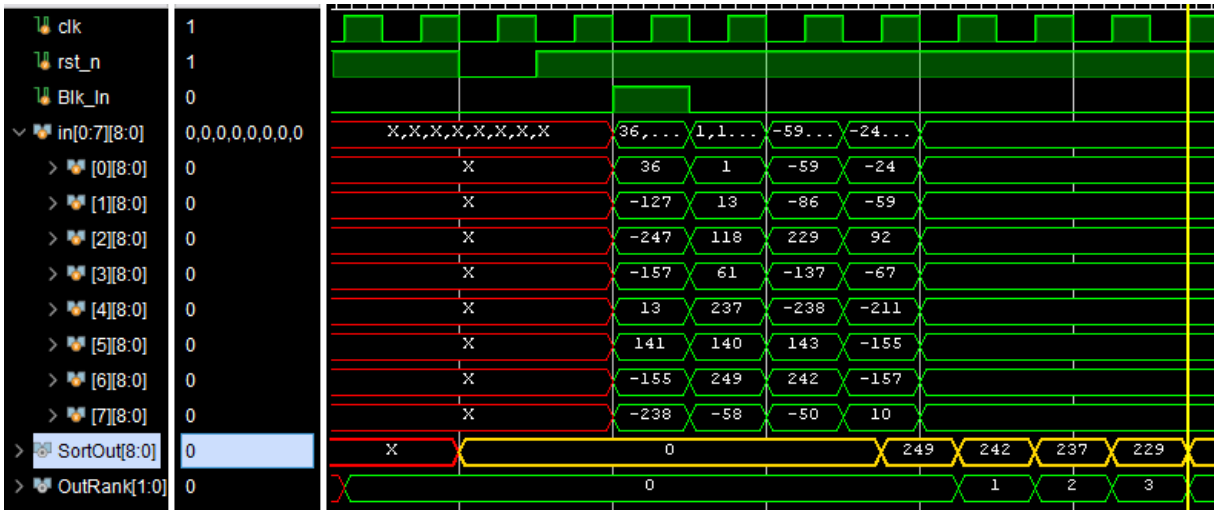

Figure 3.2: Timing Diagram of SelectTopK Behavior Simulation Results

```
PS D:\DSP-In-VLSI\HW1-Sorter> python .\find_top4.py
Group 1: [249, 242, 237, 229]
PS D:\DSP-In-VLSI\HW1-Sorter>
```

Figure 3.3: Sorting Results by Python

Procedure 4 — Full Timing Verification

Show that your design can generate required top-4 output in descending order every 4 clock cycles as indicated in Fig. 3 in the timing diagram with proper input signal "**BlkIn**" and output indicator "**OutRank**". Please feed 4 blocks and check the outputs of four blocks. If it is too long, please cut it down into several segments to make the numerical expressions in the timing diagram clear. If the numerical expressions are hard to distinguish, correct evaluation may not be given. **(30%)**

4.1 Timing Diagram

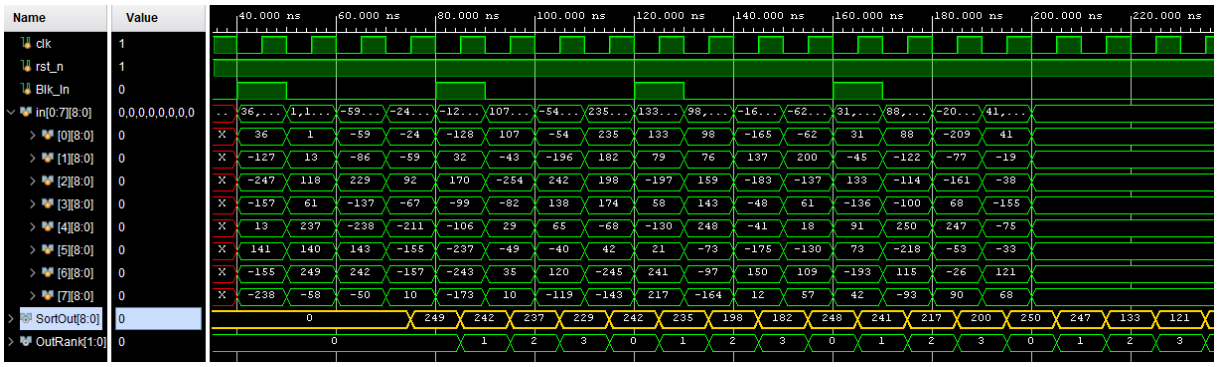

Figure 4.1: Timing Diagram of SelectTopK Behavior Simulation Results

Procedure 5 — Python Verification

Please use Matlab (Python) command "sort" to verify your results of your randomly-generated sequence and compare to the Verilog simulation results. **(10%)**

5.1 Verification Following Procedure 4

The sorting results generated by Python **are identical to** the simulation results from the Verilog simulation in Procedure 4.

```
PS D:\DSP-In-VLSI\HW1-Sorter> python .\find_top4.py
Group 1: [249, 242, 237, 229]
Group 2: [242, 235, 198, 182]
Group 3: [248, 241, 217, 200]
Group 4: [250, 247, 133, 121]
PS D:\DSP-In-VLSI\HW1-Sorter>
```

Figure 5.1: Sorting Results by Python

Procedure 6 — Synthesis Report

Synthesis your design in Procedure 4. Show the number of adders/subtractors/comparators in your design. Sum them up together to see if it matches with your block diagram. **(10%)** (Because you may use counters to control your circuits, we will not ask that the two values should be exactly the same. However, there should not be a large discrepancy.)

6.1 Component Count

The component counts after synthesis are exactly identical to the estimates from Procedure 3.

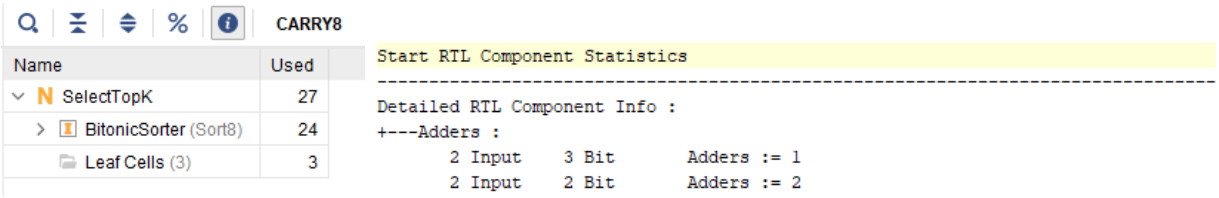

Figure 6.1: Component Counts Report

Comparators	Adders	Subtractors
27	3	0

Table 6.1: Component Count Summary