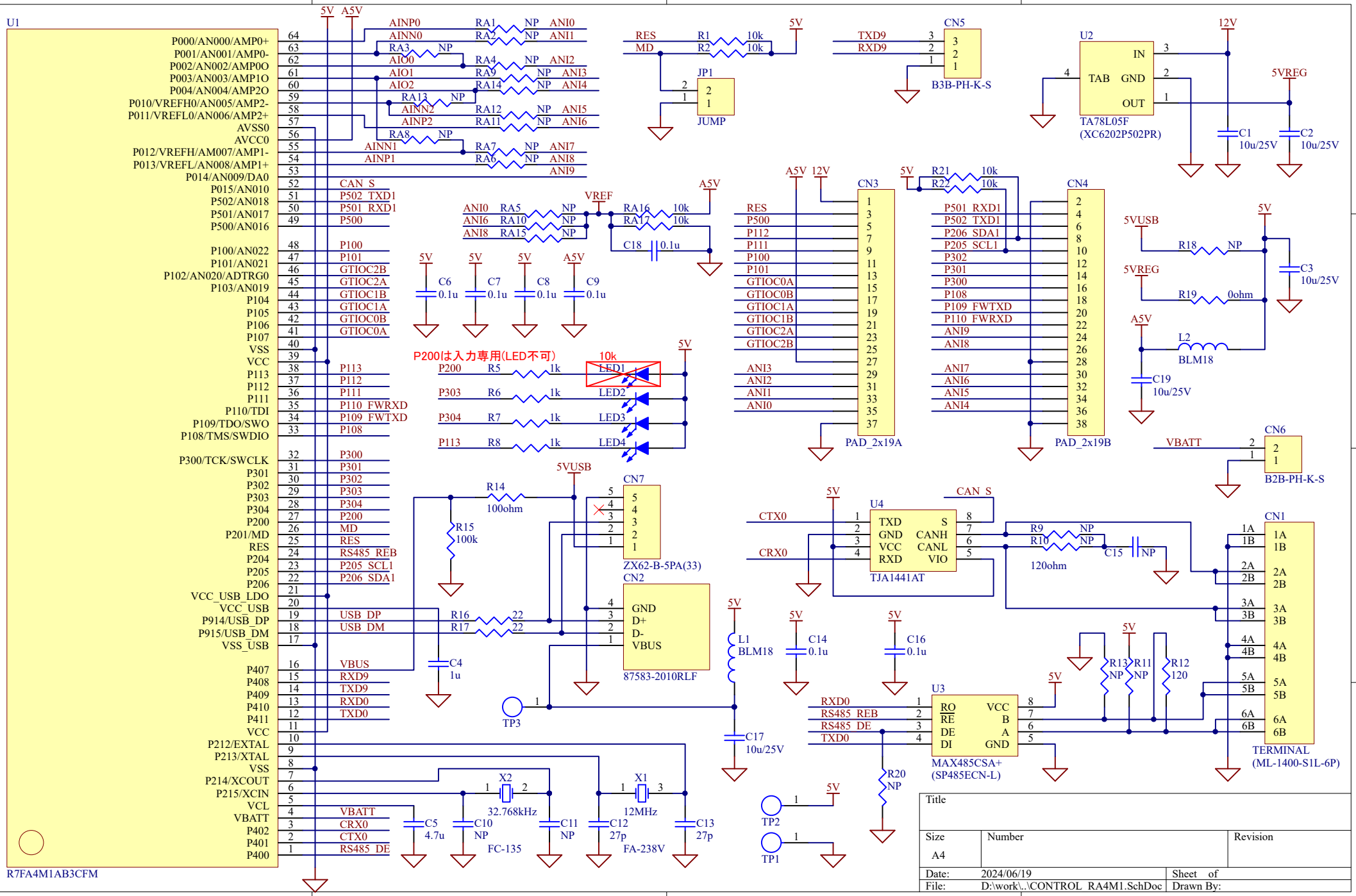
U1
R7FA4M1AB3CFM
P000/AN000/AMP0+
P001/AN001/AMP0-
P002/AN002/AMP0O
P003/AN003/AMP1O
P004/AN004/AMP2O
P010/VREFH0/AN005/AMP2-
P011/VREFL0/AN006/AMP2+
AVSS0
AVCC0
P012/VREFH/AM007/AMP1-
P013/VREFL/AN008/AMP1+
P014/AN009/DA0
P015/AN010
P502/AN018
P501/AN017
P500/AN016
P100/AN022
P101/AN021
P102/AN020/ADTRG0
P103/AN019
P104
P105
P106
P107
VSS
VCC
P113
P112
P111
P110/TDI
P109/TDO/SWO
P108/TMS/SWDIO
P300/TCK/SWCLK
P301
P302
P303
P304
P200
P201/MD
RES
P204
P205
P206
VCC_USB_LDO
VCC_USB
P914/USB_DP
P915/USB_DM
VSS_USB
P407
P408
P409
P410
P411
VCC
P212/EXTAL
P213/XTAL
VSS
P214/XCOUT
P215/XCIN
VCL
VBATT
P402
P401
P400
CAN_S
P502_TXD1
P501_RXD1
P500
P100
P101
GTIOC2B
GTIOC2A
GTIOC1B
GTIOC1A
GTIOC0B
GTIOC0A
P113
P112
P111
P110_FWRXD
P109_FWTXD
P108
P300
P301
P302
P303
P304
P200
MD
RES
RS485_REB
P205_SCL1
P206_SDA1
USB_DP
USB_DM
VBUS
RXD9
TXD9
RXD0
TXD0
VBATT
CRX0
CTX0
RS485_DE
5V
A5V
AINP0
AINN0
AIO0
AIO1
AIO2
AINN2
AINP2
AINN1
AINP1
RA1
RA2
RA3
RA4
RA9
RA14
RA13
RA12
RA11
RA8
RA7
RA6
NP
ANI0
ANI1
ANI2
ANI3
ANI4
ANI5
ANI6
ANI7
ANI8
ANI9
RES
MD
R1
R2
10k
JP1
JUMP
CN5
B3B-PH-K-S
U2
TA78L05F
(XC6202P502PR)
IN
TAB
GND
OUT
12V
5VREG
C1
10u/25V
C2
10u/25V
VREF
RA16
RA17
C18
0.1u
C6
C7
C8
C9
0.1u
CN3
PAD_2x19A
CN4
PAD_2x19B
R21
R22
5VUSB
R18
R19
0ohm
C3
10u/25V
L2
BLM18
C19
10u/25V
CN6
B2B-PH-K-S
P200は入力専用(LED不可)
R5
R6
R7
R8
1k
LED1
LED2
LED3
LED4
CN7
ZX62-B-5PA(33)
R14
100ohm
R15
100k
CN2
GND
D+
D-
VBUS
87583-2010RLF
R16
R17
22
C4
1u
TP3
L1
BLM18
C17
10u/25V
C14
0.1u
C16
0.1u
U4
TJA1441AT
TXD
GND
VCC
RXD
S
CANH
CANL
VIO
CTX0
CRX0
R9
R10
120ohm
C15
U3
MAX485CSA+
(SP485ECN-L)
RO
RE
DE
DI
VCC
B
A
GND
R13
R11
R12
120
R20
TP2
TP1
CN1
TERMINAL
(ML-1400-S1L-6P)
X2
32.768kHz
X1
12MHz
C5
4.7u
C10
NP
FC-135
C11
NP
C12
27p
FA-238V
C13
27p
Title
Size
A4
Number
Revision
Date:
2024/06/19
Sheet of
File:
D:\work\..\CONTROL_RA4M1.SchDoc
Drawn By: