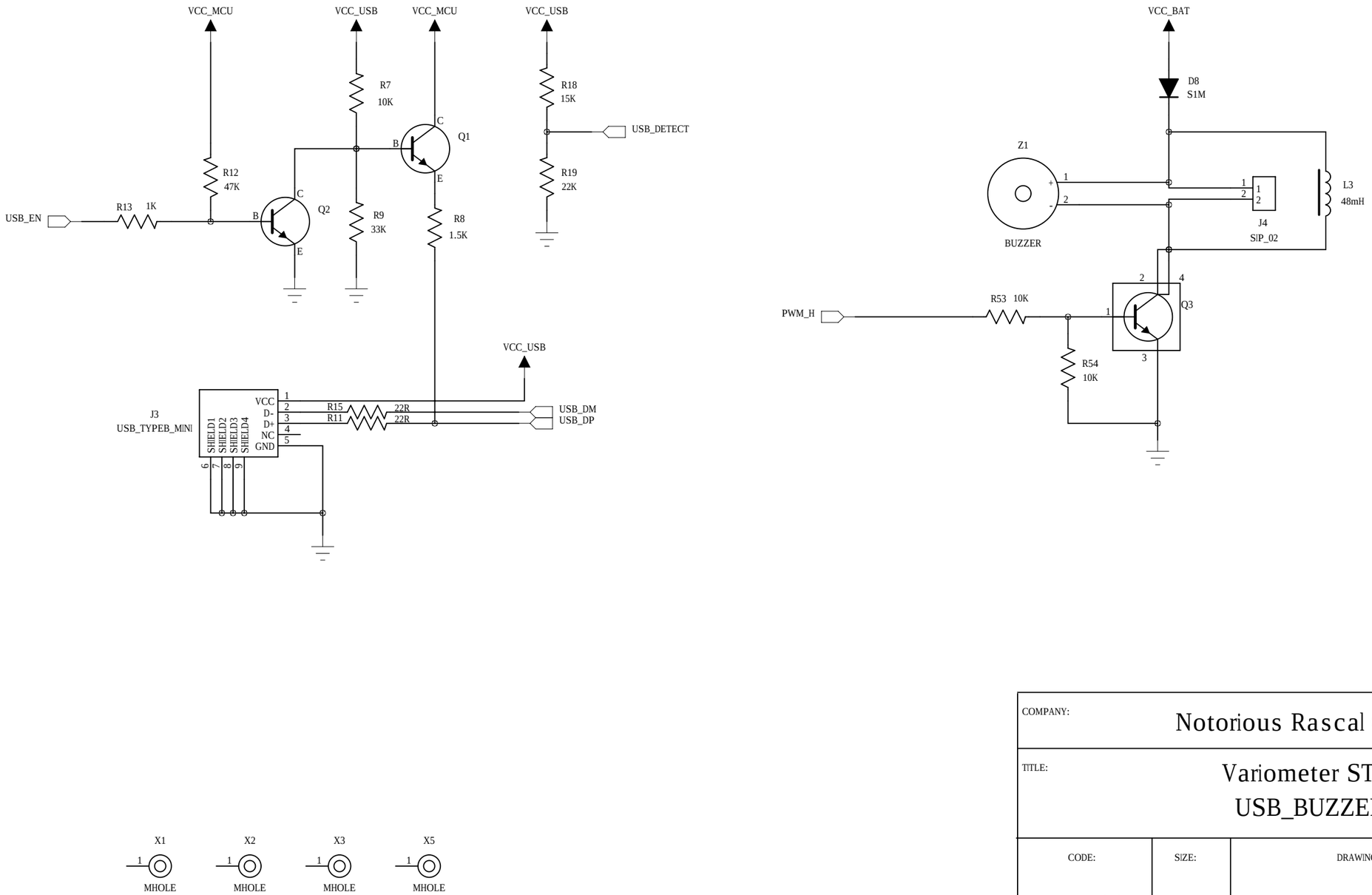

COMPANY: Notorious Rascal Club

TITLE: Variometer STM32 USB_BUZZER

CODE:	SIZE:	DRAWING NO:	REV:
VAR02	B	2	B

SCALE: <Scale>

SHEET: 1 OF 5

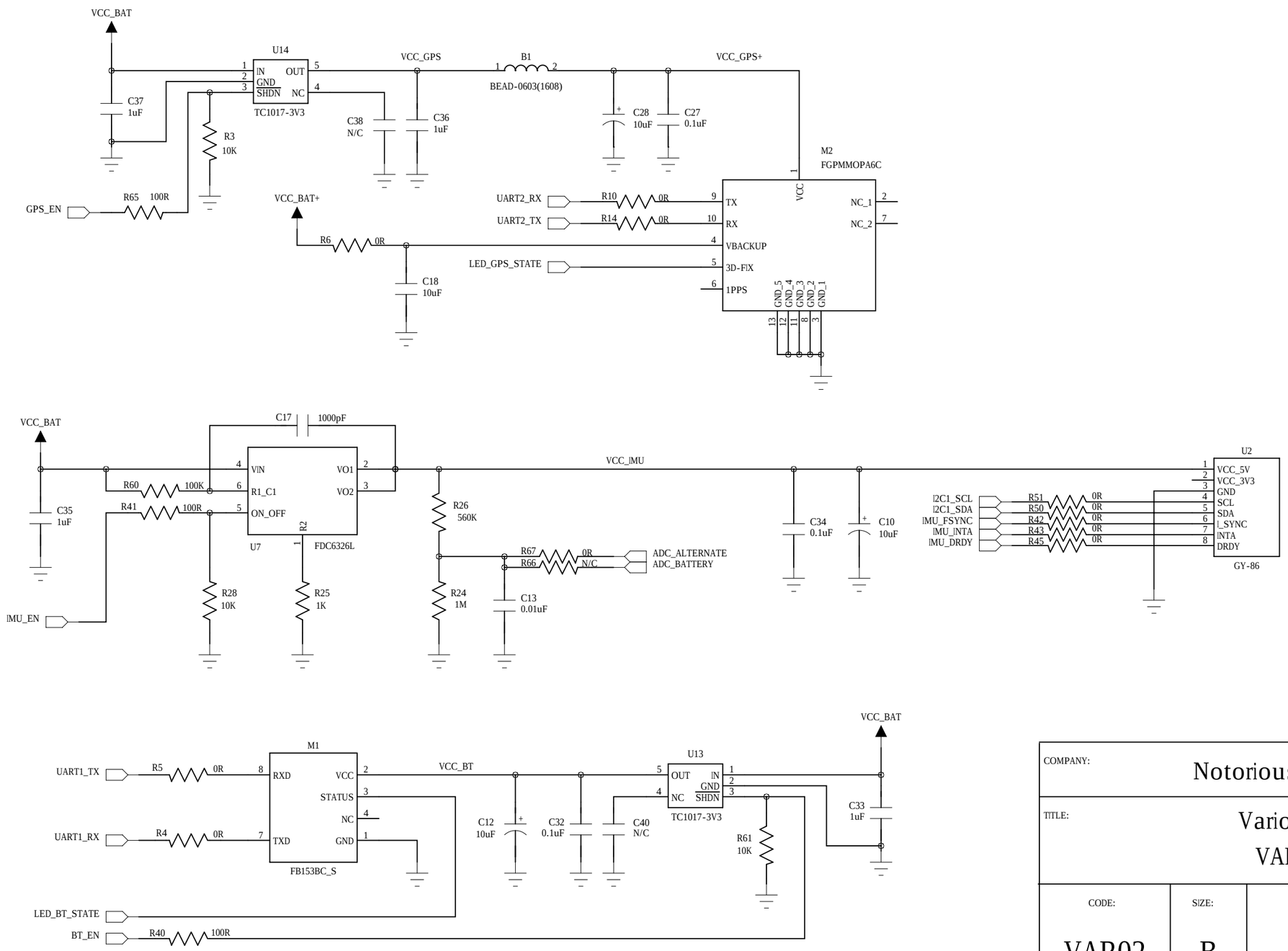

COMPANY:	Notorious Rascal Club		
TITLE:	Variometer STM32 VARIOMENTER		
CODE: VAR02	SIZE: B	DRAWING NO: 2	REV: B
SCALE: <Scale>		SHEET: 2 OF 5	

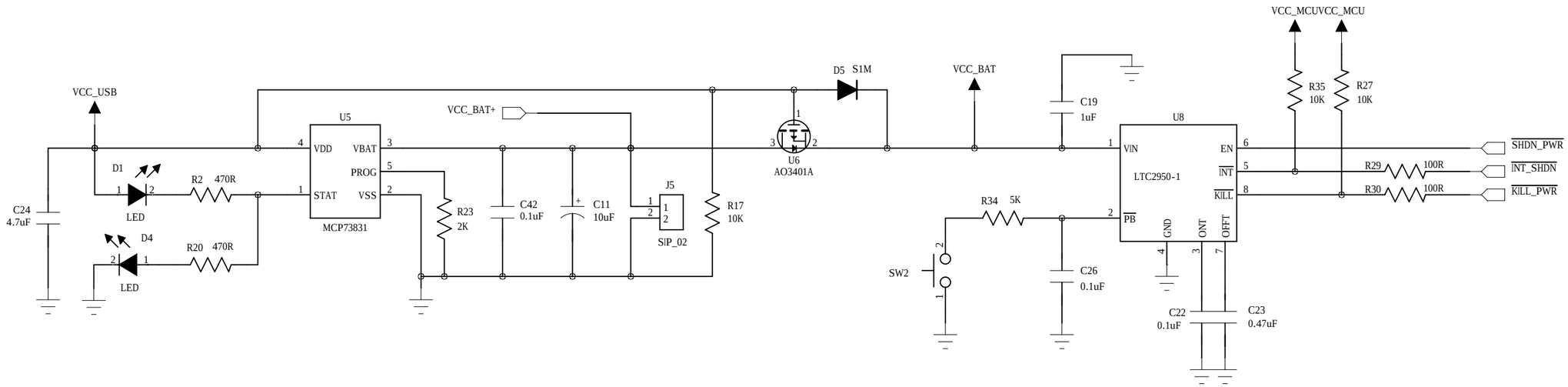

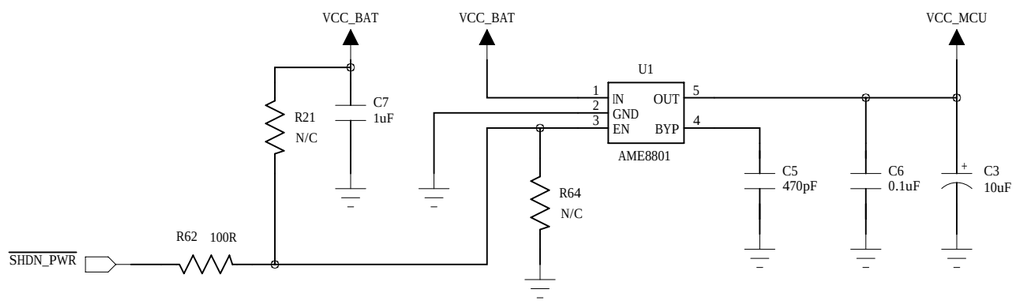

COMPANY:	Notorious Rascal Club		
TITLE:	Variometer STM32 POWER		
CODE: VAR02	SIZE: B	DRAWING NO: 2	REV: B
SCALE: <Scale>		SHEET: 3 OF 5	

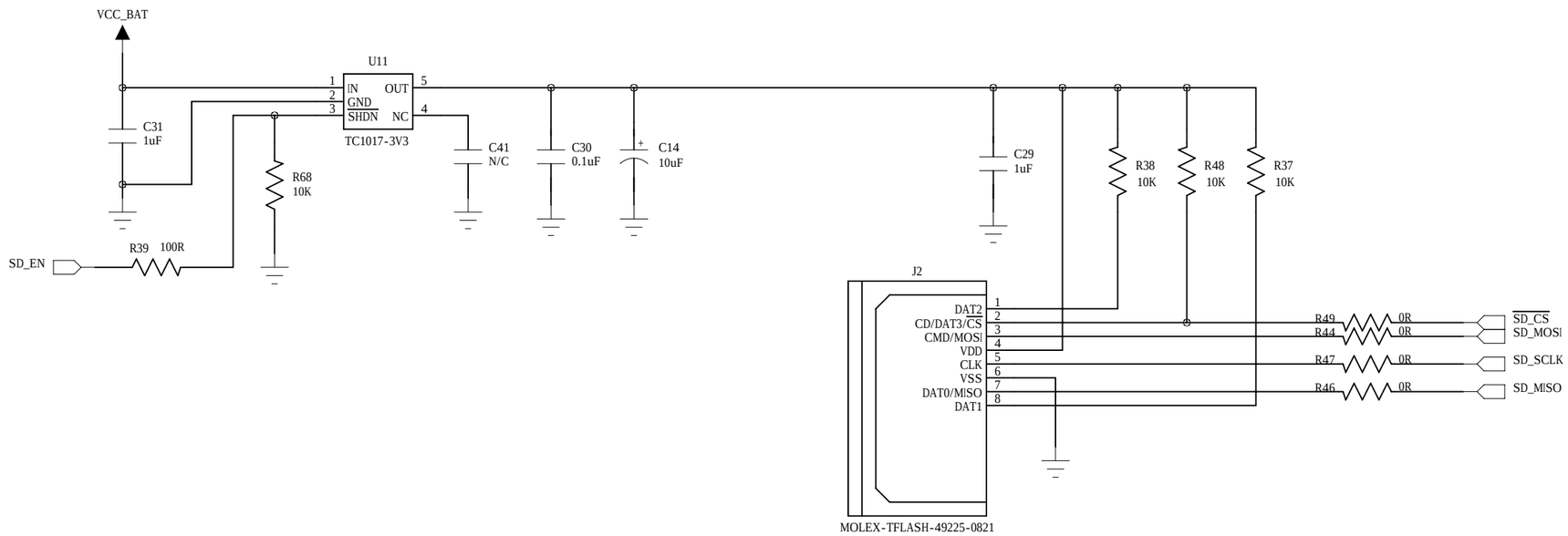

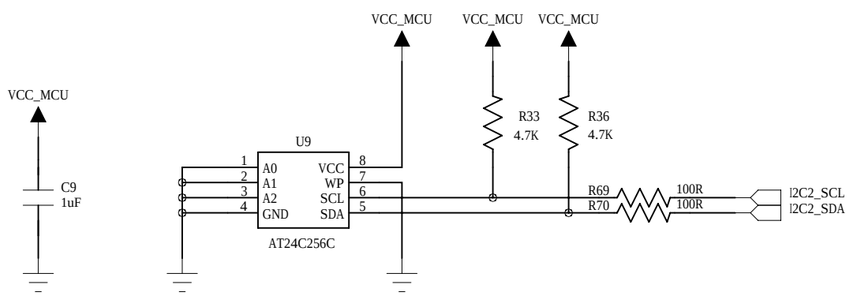

COMPANY: Notorious Rascal Club			
TITLE: Variometer STM32 SD_DEBUG			
CODE: VAR02	SIZE: B	DRAWING NO: 2	REV: B
SCALE: <Scale>		SHEET: 4 OF 5	

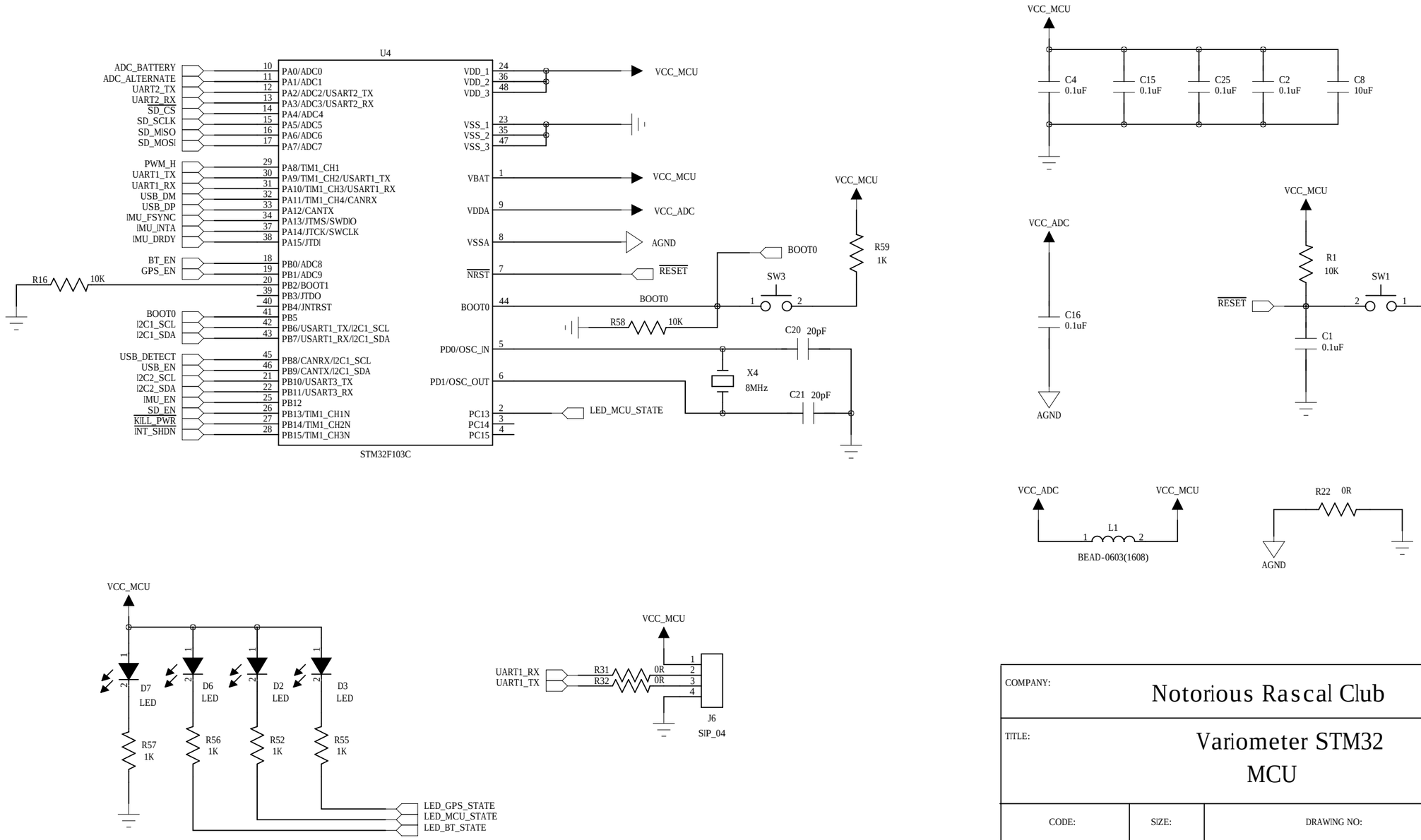

COMPANY:	Notorious Rascal Club
TITLE:	Variometer STM32 MCU

CODE:	SIZE:	DRAWING NO:	REV:
VAR02	B	2	B

SCALE: <Scale>

SHEET: 5 OF 5