ECE Lab #7: Operational Amplifiers: Part 2

Department of Electrical and Computer Engineering
Spring 2025[1]

Overview

The purpose of Lab 7 is to:

- Implement and Experiment with Op-Amp Circuits:
  - Perform experiments involving basic operational amplifier (op-amp) circuits using negative feedback.
  - Become familiar with non-inverting amplifiers and inverting amplifiers.
- Understand the Characteristics of Op-Amps:
  - Learn about the defining properties of op-amps, including high input resistance, low output resistance, and large differential gain.
  - Understand how these characteristics make op-amps nearly ideal amplifiers and versatile building blocks in circuit applications.

0.1 Reflective AI Exercise: Op-Amp Amplifier Configurations

Objective: Demonstrate understanding of how the same two Golden Rules produce two different amplifier configurations, and when each configuration is the right choice.

Part 1: Exploration

Example prompts are provided below. You may use them, adapt them, or write your own at the same level of specificity.

Focus Area 1: Two Configurations, Two Golden Rules

> *"I am an electrical engineering student preparing for a lab on op-amp amplifier circuits. Without deriving any formulas, can you explain what the two Golden Rules of an ideal op-amp force the circuit to do in an inverting amplifier configuration? Focus on what is happening physically at the inverting input terminal."*

Follow up with:

> *"Now apply the same Golden Rules to the non-inverting configuration. What is physically different at the input compared to the inverting case? Given that both configurations follow from identical rules, what accounts for the difference in how each one is used in practice?"*

Focus Area 2: Gain-Bandwidth Product

[1] Acknowledgment: The lab was derived from **Simple Op Amps, For ADALM2000 by Doug Mercer**

> *"I am using a real op-amp with a gain-bandwidth product of 1 MHz. Can you explain in physical terms what gain-bandwidth product means and why it exists as a constraint? If I configure this op-amp for a closed-loop gain of 10, what is the highest frequency at which it will still behave as expected?"*

Follow up with:

> *"If I increase the closed-loop gain to 100 using the same op-amp, what happens to the usable bandwidth? Describe what I would see on an oscilloscope if I drove this amplifier with a signal at a frequency above that limit."*

After completing both focus areas, connect them: the inverting and non-inverting configurations both have a closed-loop gain set by external resistors. Does the gain-bandwidth product constrain both configurations equally, or does the choice of configuration affect how that limit is encountered in practice?

Part 2: The Self-Test

Open Gemini and write your own quiz prompt targeting these two concepts. Your questions must involve explaining in physical terms — using the Golden Rules — why the two amplifier configurations behave differently, and predicting what happens to a real amplifier's output when the signal frequency or gain pushes against the gain-bandwidth product. Your prompt must explicitly instruct the AI not to ask questions that require algebraic derivations.

Apply the meta-prompt from *A Mind Worth Questioning* to evaluate and strengthen your draft, then run the quiz. Submit your original draft, the AI's critique, your revised prompt, and the full quiz transcript to Gradescope.

Part 3: Formal Reflection (150–250 words)

Your written synthesis must address all three of the following points:

The Link How the same two Golden Rules produce two configurations with different input behavior, and what that difference means for how each is used in practice.

The Technical "Why" Correct use of terms such as virtual ground, virtual short, closed-loop gain, or gain-bandwidth product.

The Lab Application A specific Lab 7 measurement — either a gain deviation at high frequency or an output saturation event — that you can now explain using one of the real-device limits you explored.

Prelab Deliverable #1

Submit your Part 2 prompt-craft artifact and your Part 3 reflection (150–250 words) to Gradescope.

1 Experiment #4: Non-Inverting Amplifier

1.1 Background

The non-inverting amplifier configuration is shown in Figure 1. Like the unity-gain buffer (which is a special type of non-inverting amplifier, the feedback resistor is 0 Ohms), this circuit has the (usually) desirable property of high input resistance, so it is useful for buffering non-ideal sources:

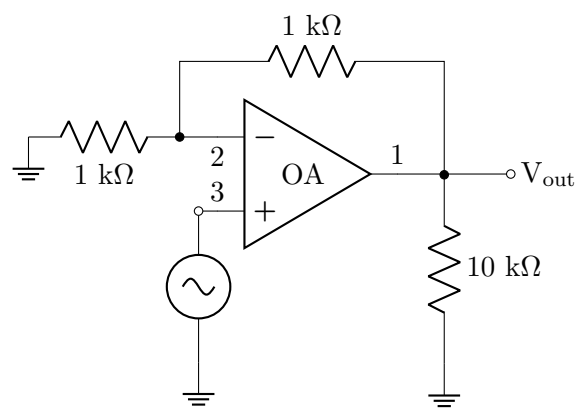

Figure 1: Non-inverting amplifier with gain of 2. The 1 kΩ feedback and 1 kΩ ground resistors set the closed-loop gain to $1 + R_f/R_1 = 2$. The 10 kΩ resistor is the output load.

Materials

- 2 1 kΩ resistor
- 1 10 kΩ resistors
- 1 LM6134 quad op-amp
- 2 0.1 μF capacitors

1.2 Hardware Setup

- Use the same +5 and -5 Volt connections to power as in Lab #6.
- With the power turned off, modify your unity gain amplifier circuit of Lab #6 as shown in Figure 1. Start with a feedback resistor of R = 1kΩ.

> IMPORTANT
>
> **Leave the power supplies off. Get your setup checked off by TA or lab assistant before proceeding to the next step**.

- Turn on the power supplies and observe the current draw to be sure there are no accidental shorts.

1.3 Procedure

- Apply a 2 volt amplitude peak-to-peak, 1 kHz sine wave at the input, and display both input and output on the scope. Measure the voltage gain of this circuit, and compare to the theory discussed in class. Export a plot of the waveforms and include it in your lab report. A plot example is presented in Figure 2.

Lab Deliverable #4a

Include the exported plot of the non-inverting amplifier with $R_2 = 1$ kΩ.

Lab Deliverable #4b

Report the measured gain and compare it to the theoretical value.

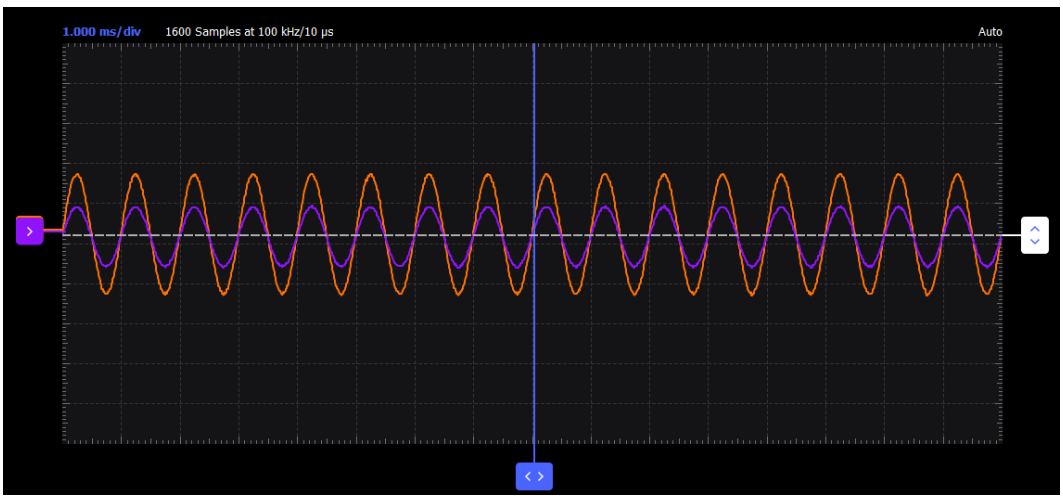

Figure 2: Example oscilloscope waveforms for the non-inverting amplifier. The orange Channel 1 output has twice the amplitude of the purple Channel 2 input with no phase shift, confirming a closed-loop gain of 2.

- Increase the feedback resistor from 1 kΩ to about 5 kΩ. What is the measured gain now?

Lab Deliverable #4c

For a 5 kΩ feedback resistor, report the measured gain and compare it to the theoretical value.

- Increase the feedback resistance further until the onset of clipping, that is, until the peaks of the output signal begin to be flattened due to output saturation. Record the value of resistance where this happens.

Lab Deliverable #4d

Record the feedback resistance at which the output begins to saturate.

- Now increase the feedback resistance to 100 kΩ.

Lab Deliverable #4e

For a feedback resistance to 100 kΩ, describe and draw waveforms in your notebook. What is the theoretical gain at this point? How small would the input signal have to be in order to keep the output level to less than 5V given this gain? Try to adjust the waveform generator to this value. Describe the output achieved.

The last step underscores an important consideration for high-gain amplifiers. High-gain necessarily implies a large output for a small input level. Sometimes this can lead to inadvertent saturation due to the amplification of some low-level noise or interference, for example the amplification of stray 60Hz signals from power-lines that can sometimes be picked up. Amplifiers will amplify any signals at the input terminals, whether you want it or not.

2 Experiment #5: Inverting Amplifier

2.1 Background

Figure 3 shows the conventional inverting amplifier configuration with a 10 kΩ "load" resistor at the output.

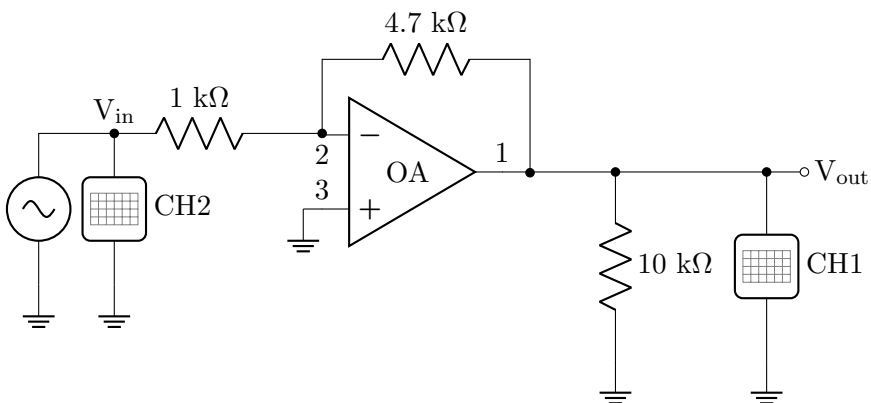

Figure 3: Inverting amplifier configuration with gain of $-R_f/R_{\text{in}} = -4.7\ \text{k}\Omega/1\ \text{k}\Omega = -4.7$. The 10 kΩ resistor is the output load.

2.2 Hardware Setup

- **Shut off the power supply before assembling a new circuit.**
- Assemble the inverting amplifier circuit shown in Figure 3 using 4.7kΩ feedback resistor.
- Cut and bend the resistor leads as needed to keep them flat against the board surface, and use the shortest jumper wires for each connection. Remember, the breadboard gives you a lot of flexibility.

IMPORTANT

Leave the power supplies off. Get your setup checked off by TA or lab assistant before proceeding to the next step.

- After check-off, turn on the power supplies and observe the current draw to be sure there are no accidental shorts.

2.3 Procedure

- Adjust the waveform generator to produce a 2 volt amplitude peak-to-peak, 1 kHz sine wave at the input (V_{in}), and display both the input and output voltages on the oscilloscope.

Lab Deliverable #5a

Export a plot of the input/output waveforms and insert in your lab report. A plot example is presented in Figure 4.

Lab Deliverable #5b

Measure and record the voltage gain of this circuit, and compare to the theory that was discussed in class.

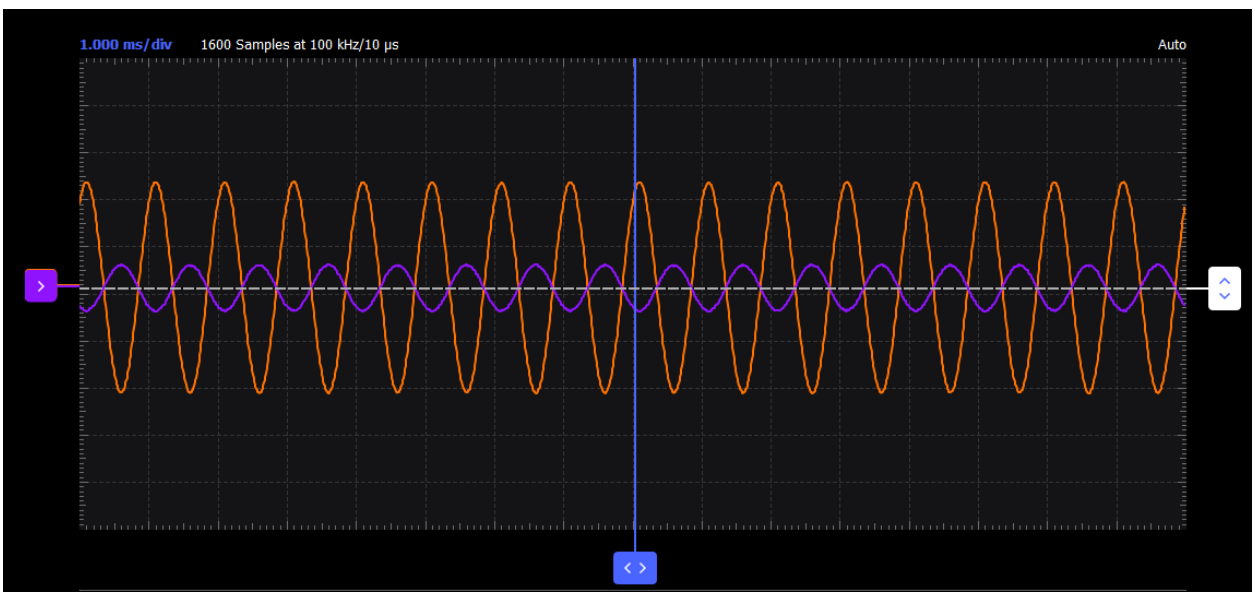

Figure 4: Example oscilloscope waveforms for the inverting amplifier. The orange Channel 1 output is approximately 4.7 times larger in amplitude than the purple Channel 2 input and is inverted by 180°, confirming the expected gain of −4.7.

2.4 Output Saturation

2.4.1 Procedure

- Now change the feedback resistor in Figure 3 from 4.7 kΩ to 10 kΩ. You do not have to switch off the power supply.
- Measure the gain now.

Lab Deliverable #5c

Report measured gain with 10 kΩ feedback resistor and compare it to the theoretical value.

- Slowly increase the amplitude of the input signal towards 2 volts until the output saturates.

Lab Deliverable #5d

Export the input and output waveforms. The output voltage of any op amp is ultimately limited by the supply voltages, and in many cases the actual limits are much smaller than the supply voltages due to internal voltage drops in the circuitry. Quantify the internal voltage drops in the LM6134 based on your measurements above.

3 Experiment #6: Summing Inverting Amplifier

The circuit of Figure 5 is a basic inverting amplifier with an additional input, called a "summing" amplifier. Using superposition we can show that V_{out} is a linear sum of V_{in1} and V_{in2} , each with their own unique gain or scale factor. In this experiment you will add two signals. One is a sinusoidal signal ($W1$) with no DC offset, and the second is a DC value (W_2). The output signal should be the result of the input signal $W1$ and the DC offset (W_2).

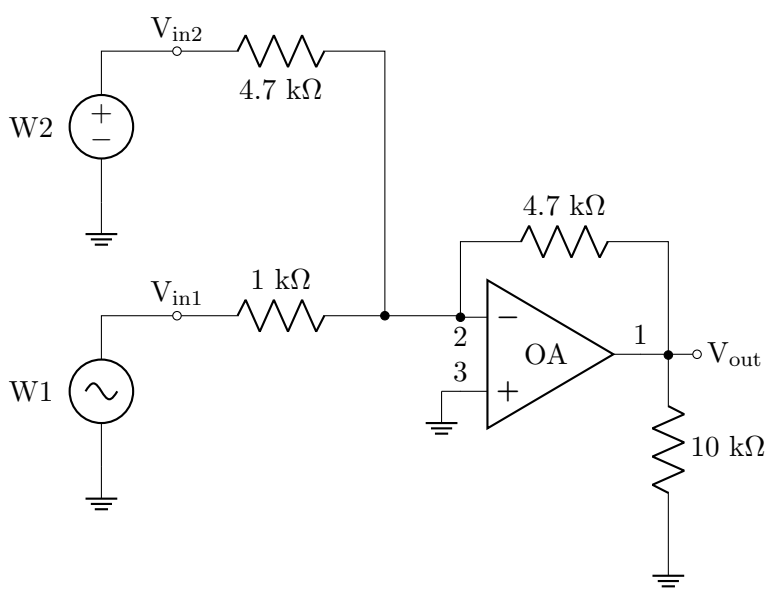

Figure 5: Inverting summing amplifier configuration. Signal W1 is amplified by $-R_f/R_1 = -4.7$ and signal W2 by $-R_f/R_2 = -1$, giving $V_{out} = -4.7\,V_{in1} - V_{in2}$. The 10 kΩ resistor is the output load.

3.0.1 Hardware Setup

- With the power turned off, modify your inverting amplifier circuit as shown in Figure 5. Check your connection to make sure it is connected correctly.

- Turn on the power supplies and observe the current draw to be sure there are no accidental shorts.

3.0.2 Procedure

- Use the first waveform generator (W1) to apply a sine wave V_{in1}, and the second waveform generator (W2) for V_{in2} to apply a DC voltage.
- Apply a 1 volt amplitude peak-to-peak sine wave with no DC offset for V_{in1} and 1 volt DC for V_{in2}.
- Observe and record the input/output waveforms on the oscilloscope screen. When used in this way, such a circuit could be called a level shifter.

Lab Deliverable #6a

Export the input and output waveforms of the level shifter.

- Adjust the DC offset of waveform generator W1 (V_{in1}) until V_{out} has zero DC component.

Lab Deliverable #6b

Estimate the required DC offset **on W1** by observing the input waveform on the scope (note: it is not V_{in2}). Explain what you observe and why it makes sense.

- Reset the offset of waveform generator W1 to zero and apply a 2 volt amplitude peak-to-peak sine wave for V_{in1}. Increase the offset voltage of waveform generator W2, V_{in2} slowly to 4V.

Lab Deliverable #6c

What happens to V_{out}? Record the DC voltage of the output.Explain what you observe.

Submission Instructions

IMPORTANT

Submit your completed lab reports in Gradescope. All plots, images, data tables, and calculations must be clearly labeled and referenced in your report text.