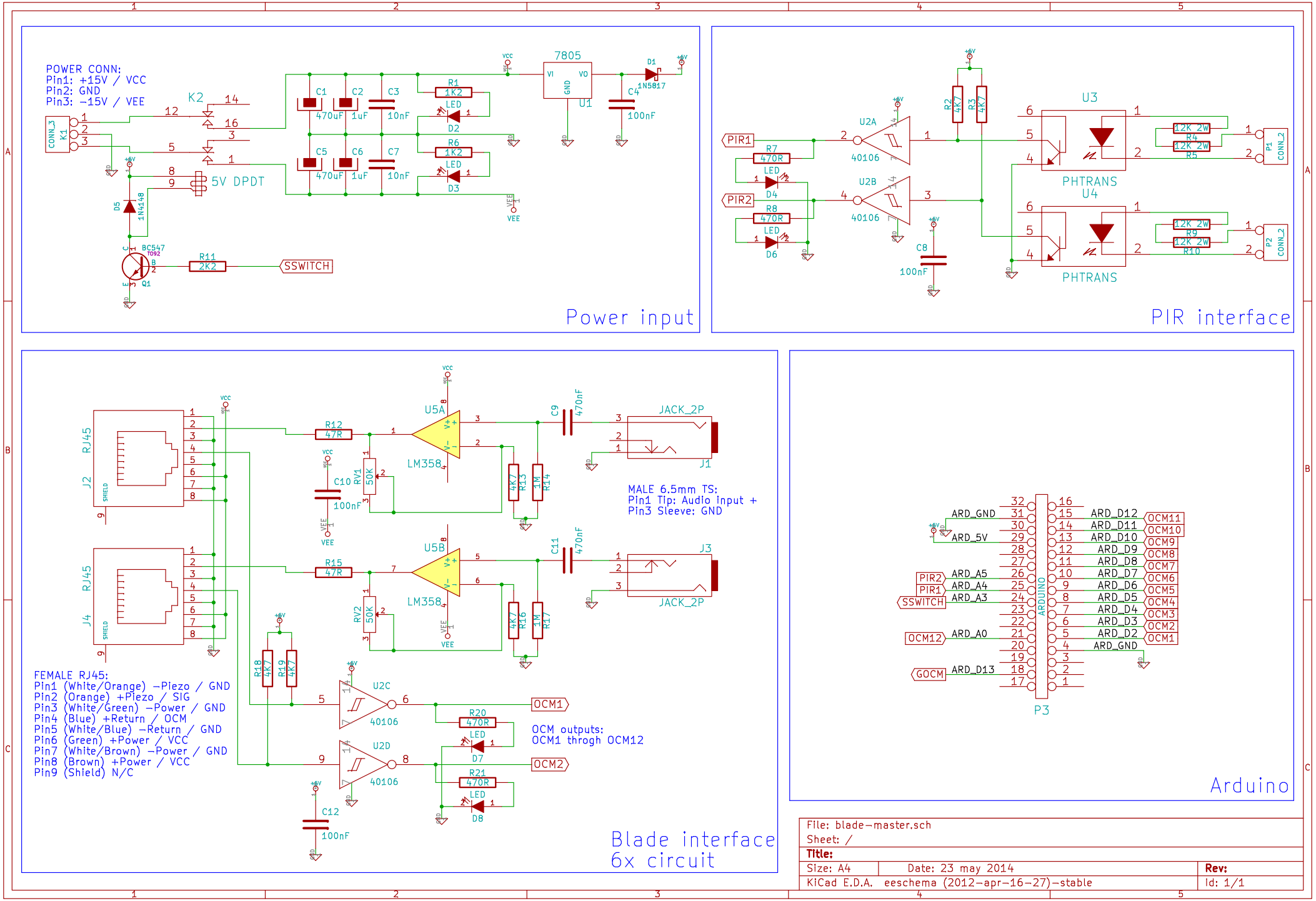
POWER CONN:
Pin1: +15V / VCC
Pin2: GND
Pin3: -15V / VEE
CONN_3
K1
K2
5V DPDT
D5
1N4148
BC547
TO92
Q1
R11
2K2
SSWITCH
C1
C2
C3
C5
C6
C7
470uF
1uF
10nF
R1
R6
1K2
LED
D2
D3
VCC
VEE
7805
VI
VO
GND
U1
D1
1N5817
C4
100nF
Power input
PIR1
PIR2
R7
R8
470R
D4
D6
U2A
U2B
40106
R2
R3
4K7
C8
100nF
U3
U4
PHTRANS
R4
R5
R9
R10
1.2K 2W
P1
P2
CONN_2
Power input
PIR interface
RJ45
J2
J4
SHIELD
FEMALE RJ45:
Pin1 (White/Orange) -Piezo / GND
Pin2 (Orange) +Piezo / SIG
Pin3 (White/Green) -Power / GND
Pin4 (Blue) +Return / OCM
Pin5 (White/Blue) -Return / GND
Pin6 (Green) +Power / VCC
Pin7 (White/Brown) -Power / GND
Pin8 (Brown) +Power / VCC
Pin9 (Shield) N/C
R12
R15
47R
U5A
U5B
LM358
C10
C11
C12
100nF
RV1
RV2
50K
R13
R14
R16
R17
1M
C9
470nF
JACK_2P
J1
J3
MALE 6.5mm TS:
Pin1 Tip: Audio input +
Pin3 Sleeve: GND
R18
R19
U2C
U2D
OCM1
OCM2
R20
R21
D7
D8
OCM outputs:
OCM1 throgh OCM12
Blade interface
6x circuit
ARDUINO
P3
ARD_GND
ARD_5V
ARD_A5
ARD_A4
ARD_A3
ARD_A0
ARD_D13
ARD_D12
ARD_D11
ARD_D10
ARD_D9
ARD_D8
ARD_D7
ARD_D6
ARD_D5
ARD_D4
ARD_D3
ARD_D2
ARD_GND
PIR2
PIR1
SSWITCH
OCM12
GOCM
OCM11
OCM10
OCM9
OCM8
OCM7
OCM6
OCM5
OCM4
OCM3
OCM2
OCM1
Arduino
File: blade-master.sch
Sheet: /
Title:
Size: A4
Date: 23 may 2014
Rev:
KiCad E.D.A. eeschema (2012-apr-16-27)-stable
Id: 1/1