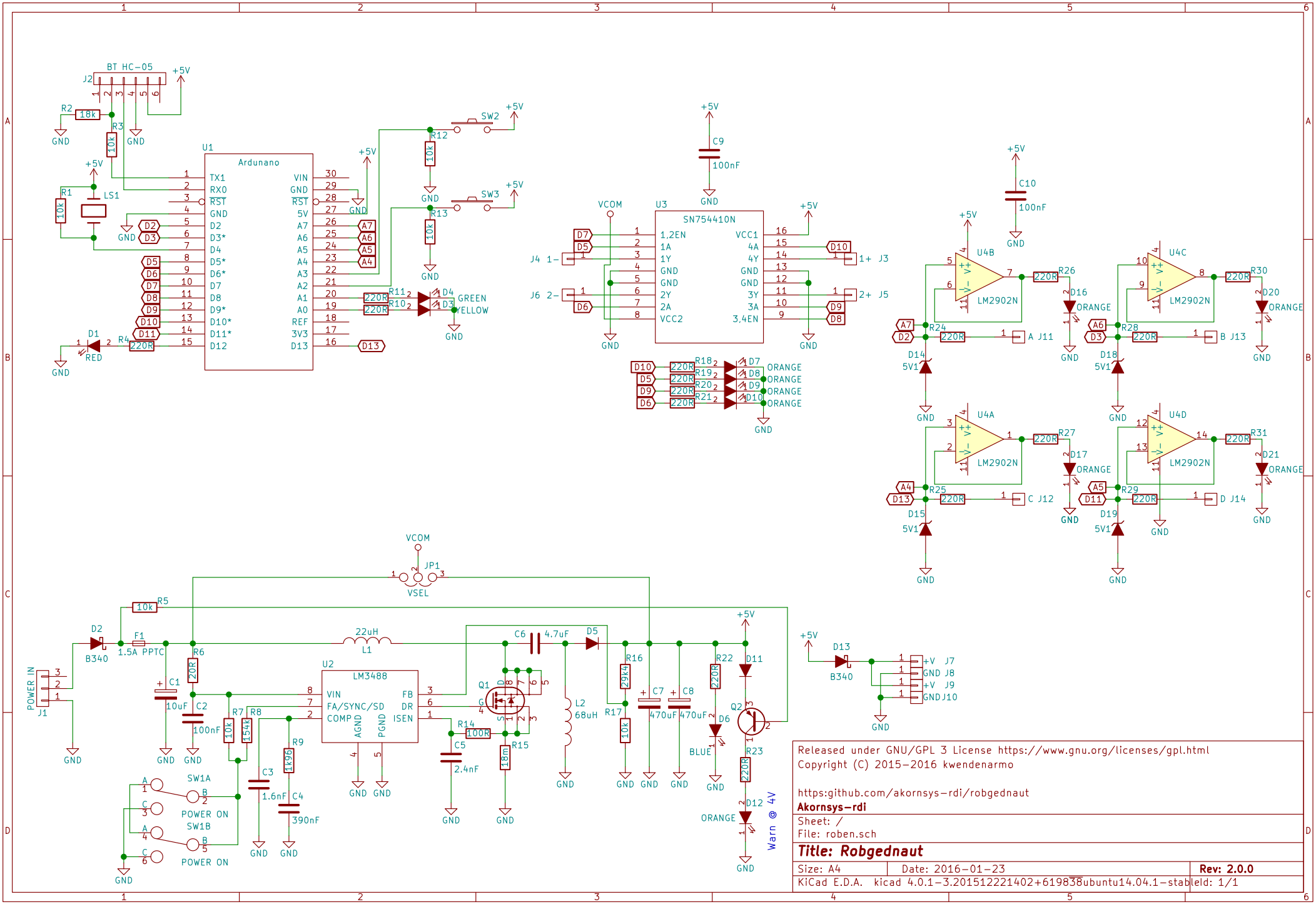

Released under GNU/GPL 3 License https://www.gnu.org/licenses/gpl.html
Copyright (C) 2015−2016 kwendenarmo

https:github.com/akornsys−rdi/robgednaut

Akornsys−rdi

Sheet: /
File: roben.sch

Title: Robgednaut

Size: A4	Date: 2016−01−23	Rev: 2.0.0
KiCad E.D.A. kicad 4.0.1−3.201512221402+619838ubuntu14.04.1−stable	Id: 1/1	