CHAPTER-5

ALC-2-41-1.5: INTRODUCTION TO AIRBORNE RADAR SYSTEM

Background

1. The original concept of radar was demonstrated by laboratory experiments carried out by Heinrich Hertz in the 1880s. The term RADAR stands for Radio Aid to Detection and Ranging. Hertz demonstrated that radio waves had the same properties as light (apart from the difference in frequency). He also showed that the radio waves could be reflected from a metal object and could be refracted by a dielectric prism mimicking the behavior of light. The concept of radar was known and was being investigated in the 1930s by a number of nations, and the British introduced a ground based early warning system called Chain Home. In the late 1930s, as part of the world's first integrated air defence, this system has been credited with the winning of the Battle of Britain in 1940. ***The invention of the magnetron in 1940 gave the ability to produce power at higher frequencies and allowed radar to be adopted for airborne use***. The first application was to airborne interception (AI) radars fitted to fighter aircraft to improve the air defence of Great Britain when used in conjunction with the Chain Home system. By the end of WWII, rudimentary ground mapping radars had also been introduced under the dubious name of H_2S. Since that time, radar has evolved to become the primary sensor on military aircraft and is widely used in civil aviation as weather radar able to warn the flight crew of impending heavy precipitation or turbulence. Since that time, enormous advances have been made in airborne radars. Fighter aircraft carry multimode radars with advanced pulse Doppler (PD), track-while scan (TWS) and synthetic aperture (SA) modes that impart an awesome capability. Larger aircraft with an airborne early warning (AEW), such as the E-3, carry large surveillance radars aloft with aerial dishes. At the other end of the scale, attack helicopters such as the AH-64 C/D Longbow Apache deploy near-millimetric radars.

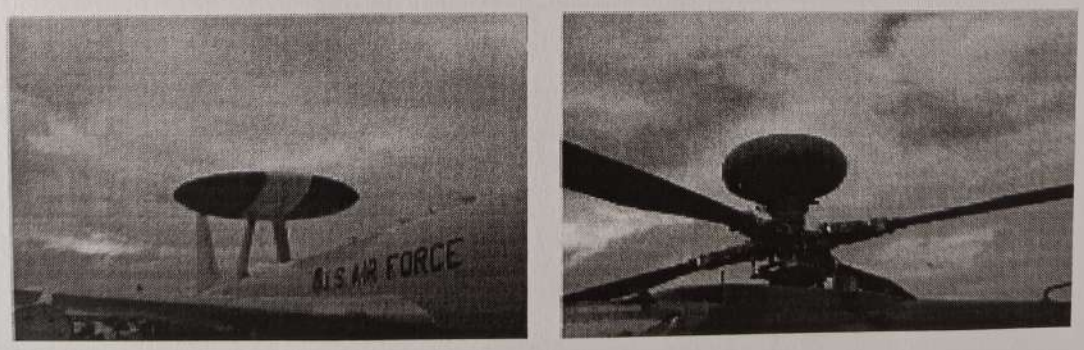

Fig 5.1 Contrasting Airborne Radar Application.

(° - °) Papa's photos (• - •)

2. **Applications.** The performance and application of radar is highly dependent upon the frequency of operation. **Fig 5.2** shows the range of electromagnetic (em) applications used in modern military avionics systems. Airborne radar cover the frequency range from ***400 MHz to 94 GHz.*** **Fig 5.3** illustrates some of the major areas of the spectrum as used by airborne platforms. In ascending order of frequency, typical applications are:

(a) E-2C Hawkeye US Navy surveillance radar operating at 400 MHz; US Air Force E-3 airborne warning aircraft command system (AWACS) employing a surveillance radar operating at 3 GHz.

(b) ***Radar altimeters*** operating at 4 GHz, commonly used on civil and military aircraft.

(c) ***Fighter aircraft*** operating in the ***10–18 GHz*** range.

(d) US Army AH-64 C/D Apache attack helicopter with Longbow radar (AH-64 D variant) operating at 35 GHz.

(e) Active radar-guided, air-launched or ground-launched anti-armour missiles: either Hellfire or Brimstone operating at 94 GHz.

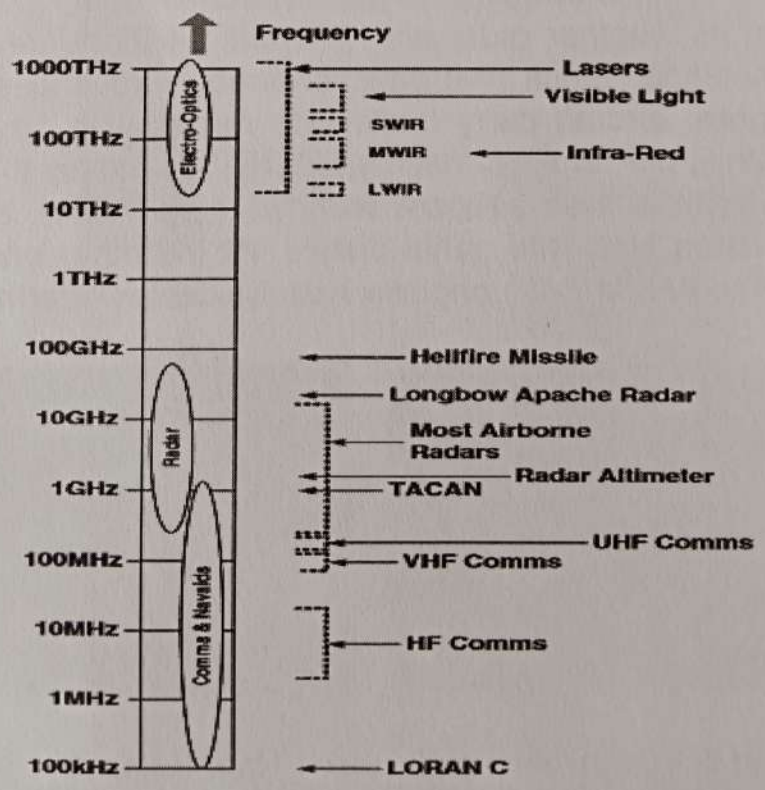

Fig 5.2 EM applications in military avionics

(° - °) Papa's photos (° - °)

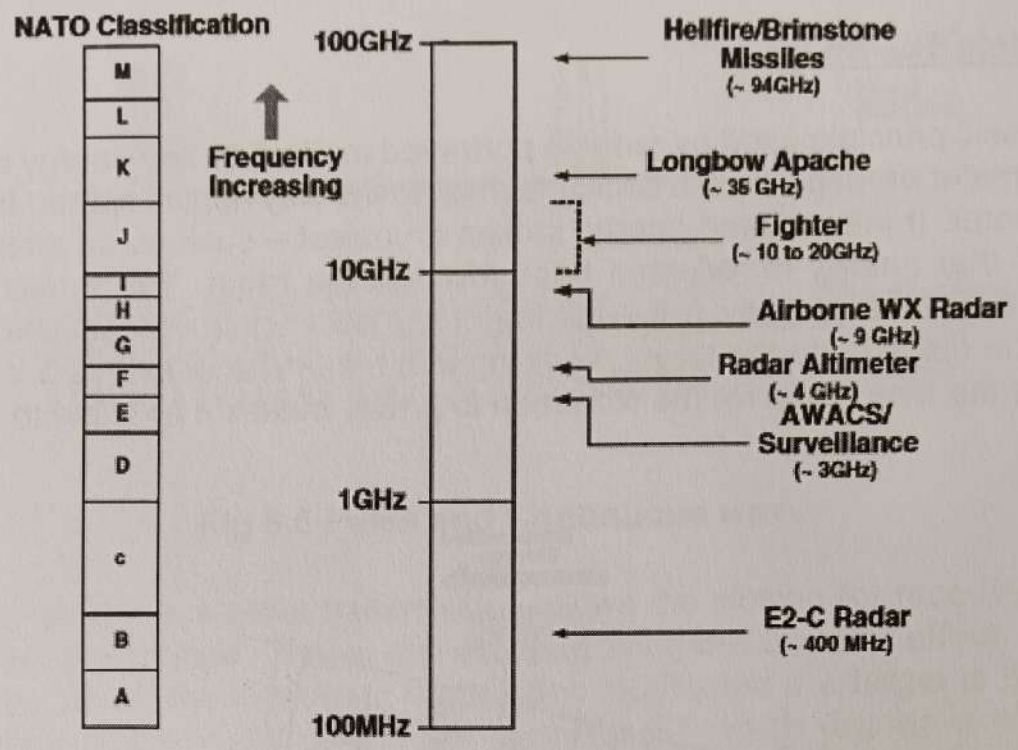

Fig 5.3 Airborne radar frequency coverage

3. The entire frequency range used by radar and other radio applications is categorised by the letter identification scheme shown in Table 5.4. However, only those frequencies assigned by the International Telecommunications Union (ITU) are available for use.

Band designator[a]	Nominal frequency range	ITU assignment
HF	3–30 MHz	
VHF	30–300 MHz	138–144 MHz
		216–225 MHz
UHF	300–1000 MHz	420–450 MHz
		850–942 MHz
L	1–2 GHz	1215–1400 MHz
S	2–4 GHz	2300–2500 MHz
		2700–3700 MHz
C	4–8 GHz	5250–5925 MHz
X	8–12 GHz	8500–10 680 MHz
Ku	12–18 GHz	13.4–14.0 GHz
		15.7–17.7 GHz
K	18–27 GHz	24.05–24.25 GHz
Ka	27–40 GHz	33.4–36 GHz
V	40–75 GHz	59–64 GHz
W	75–110 GHz	76–81 GHz
		92–100 GHz
mm	110–300 GHz	126–142 GHz
		144–149 GHz
		231–235 GHz
		238–248 GHz

Table 5.4 Designation of radar bands

(° - °) Papa's photos (• - •)

Basic Principle of a Radar

4. The basic principle used by radar is portrayed in **Fig 5.5**. The energy radiating from a radar transmitter propagates in a similar fashion to the way ripples spread from an object dropped in water. If the radiated energy strikes an object – such as an aircraft – a small proportion of that energy is reflected back towards the radar. The transmitted energy effectively has a double journey: out to the target and back again. Radar uses this principle to measure the distance to the target; knowing that the speed of light is 3 x 10^8 m/s, and by measuring the time taken for the reflection to arrive, makes it possible to calculate the target range:

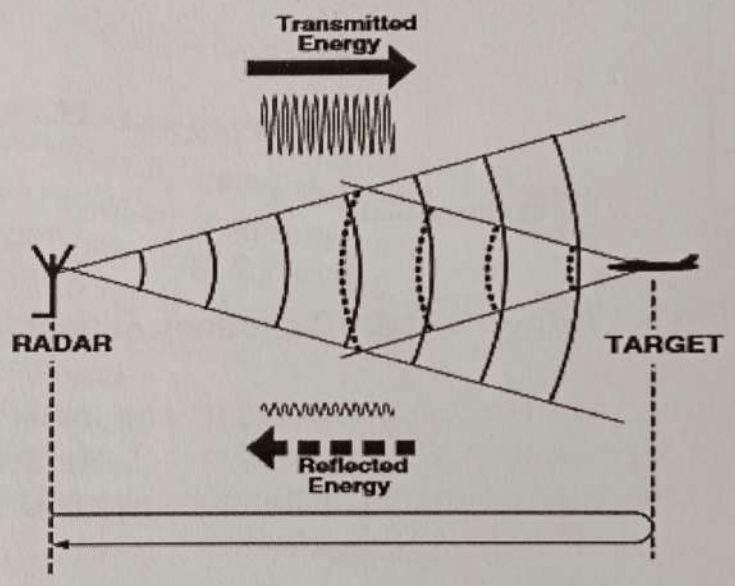

Fig 5.5 Basic Principles of Radar

$$R = \frac{c \times \Delta t}{2}$$

Where; R is the range of the target, c is the speed of light 3 x 10^8 m/s and Δt is the time taken for the radar energy to perform the round trip.

5. **Radar Transmission** Radar energy may also be transmitted in a number of ways. **Fig 5.6** shows two situations; one where the RF energy is sent in pulses and the other where RF energy is radiated continuously – also known as a continuous wave. Pulsed radar transmission is useful when information is required regarding the range of a target. Clearly, by transmitting a pulse of radar energy it is easy to measure when the reflected pulse returns and hence determines the target range using the formula given above.

(° - °) Papa's photos (• - •)

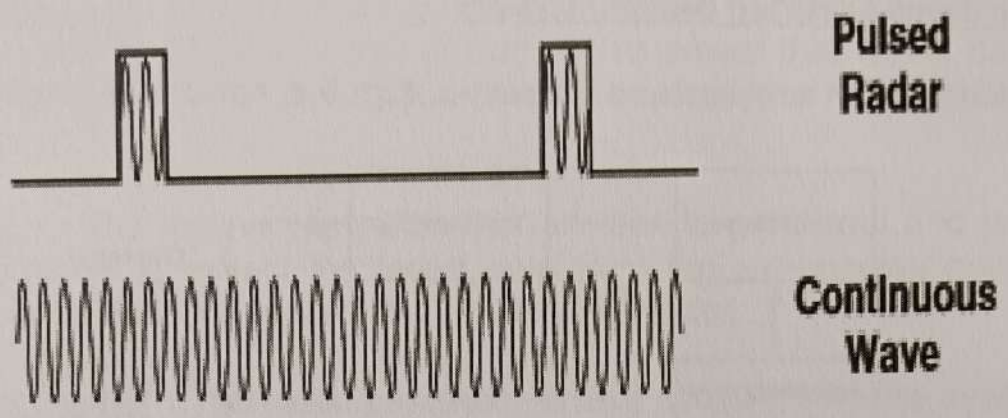

Fig 5.6 Pulse and Continuous wave

6. Using a continuous wave transmission allows the closing (or receding) velocity of the target to be determined. This is achieved by using the Doppler effect. The Doppler effect is one by which the frequency of radiation is affected if a target is moving in the radial direction between radar and target (see **Fig 5.7** which depicts a point radiating source travelling with a velocity from left to right). If a radiating (or reflecting) target is receding from an observer, the frequency will appear to reduce as far as the observer is concerned. Conversely, if the target is approaching then the frequency will appear to increase. The classic illustration is of a train approaching, passing and receding from a stationary observer: as the train approaches, the sound pitch will be higher than when it recedes. The Doppler effect is a very useful property that is extensively used in various radar applications.

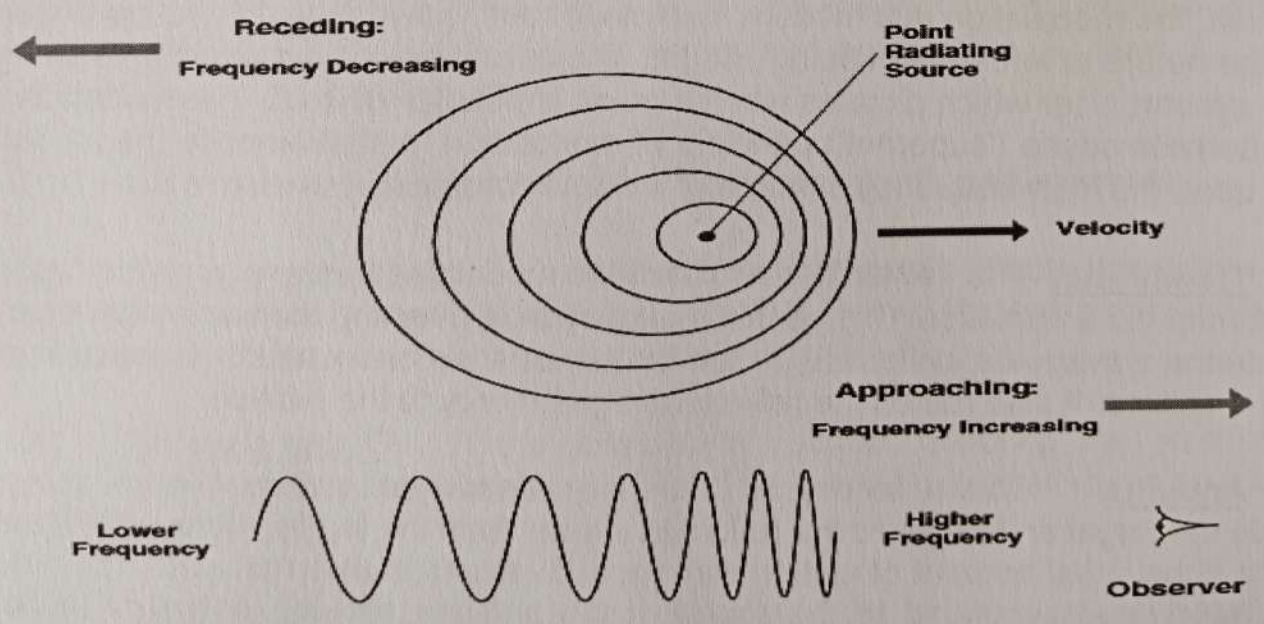

Fig 5.7 Doppler effect due to motion

(° - °) Papa's photos (• - •)

Basic Radar Block Diagram (Pulsed Radar)

7. A Pulsed radar architecture shown in **Fig 5.8** comprises of following major elements:

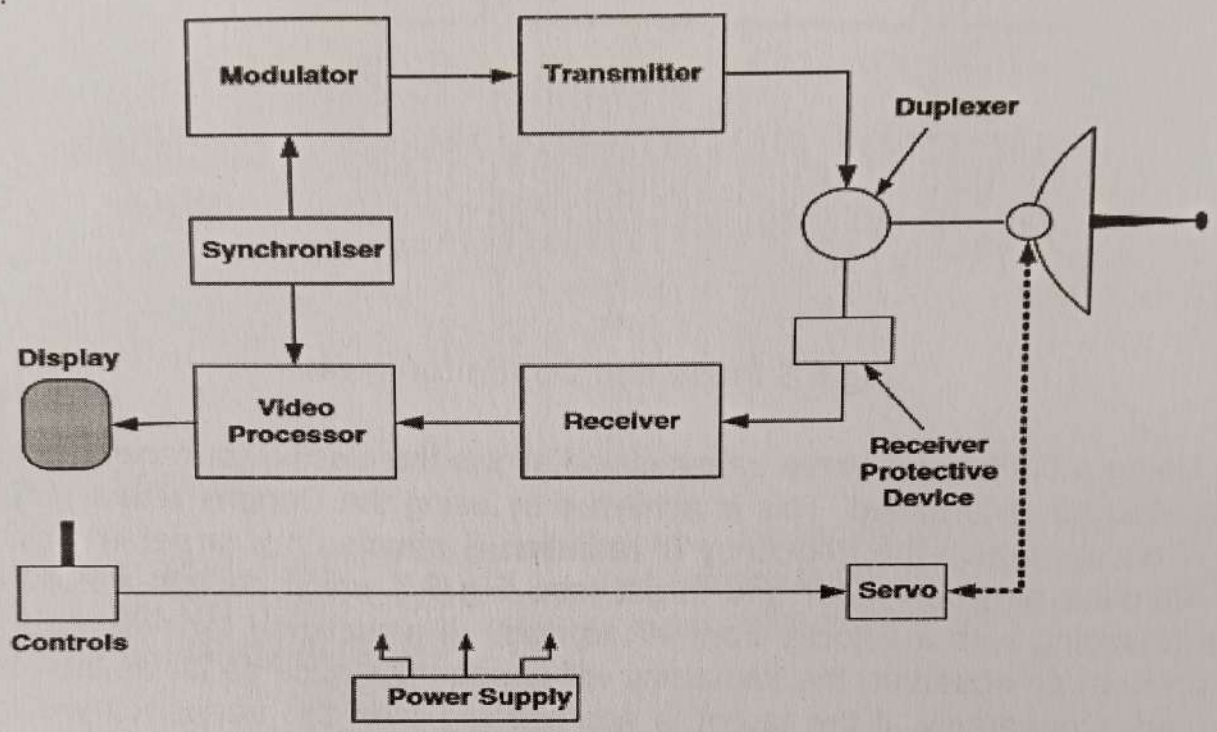

Fig 5.8 Pulse Radar Architecture

8. **Modulator** The modulator determines the pulse shape and the nature of the radar modulation. Although pulsed transmission is the most elementary form of radar operation, the modulation in a modern multimode radar may take many forms depending upon the nature of information being sought. The operation of the modulator is controlled by the synchroniser which dictates when a pulse should be initiated. The modulator uses the superheterodyne ('superhet') principle of modulation to superimpose the modulating signal upon the high-frequency carrier to provide a composite waveform.

9. **Transmitter** The transmitter amplifies the modulated carrier signal and feeds it to the antenna via a duplexer. This serves the function of directing the transmitter energy to the antenna waveguide system to be fed by the antenna elements for transmission into the atmosphere. It also routes the reflected target energy to the receiver.

10. **Antenna** The antenna, as has been described, directs the radar energy towards the target and receives the reflected energy from the target. Along with the target echo, a substantial amount of clutter from ground returns is also received. The antenna beam is focused according to the shape of the antenna and the nature of the beam required. Unwanted radar energy enters through the antenna side lobes as well as the main beam. The antenna also receives noise from a variety of external sources that can

(° - °) Papa's photos (• - •)

help mask the true target signal Returning energy is passed through a receiver protective device which blocks the large amounts of transmitted power that would cause severe damage to the receiver, but also at the appropriate time allows the reflected target energy to pass through.

11. **Receiver** The receiver amplifies the reflected target signal and performs the demodulation process to extract the target data from the surrounding noise, and the resulting target video data are passed to the video processor.

12. **Video Processor** The video processor is also controlled by the synchroniser in order that transmitted pulse and target return pulses are coordinated and that a range measurement may be made. The resulting data are coordinated and displayed on the radar display

Radar Range Equation

13. The radar range equation takes many forms depending upon those factors that need to be taken into account and the type of transmission being considered. In the simplest form, the maximum range for a single radar pulse is determined by the following equation:

$$R = \sqrt[4]{\frac{P_{\text{peak}} \times G \times \sigma \times \tau}{(4\pi)^2 \times S_{\text{min}}}}$$

Where R is the radar range (m), P_{peak} is the peak power (W), G is the antenna gain (m^2) (this may also be expressed in decibels for ease of calculation, as explained earlier), σ is the target cross-sectional area (m^2), τ is the transmitted pulse width (s), and S_{min} is the minimum detectable signal energy (W-s).

14. There are some interesting observations to make regarding this formula:

(a) **Peak power Ppeak**. As the peak power only affects the radar range by the inverse fourth power, doubling the peak power of the radar only increases the range by the inverse fourth power of $2 \approx 1.19$ or 19%.

(b) **Antenna gain G**. If the antenna is circular, doubling the size of the antenna will increase the gain of the antenna by 4, and the overall range by a factor 1/2 or by about 71%.

(c) **Target cross-sectional area(σ).** Reducing the target cross-sectional area by a factor of 60 dB by using extensive low observability (LO) techniques reduces the range.

(° - °) Papa's photos (• - •)

(d) **Pulse width(τ).** Maintaining mean power but decreasing the pulse width increases the peak power but also increases the receiver bandwidth, allowing more noise into the receiver.

(e) **Minimum detectable signal Smin**. Decreasing the minimum detectable signal increases, the radar range, but the risk of false alarms may increase.

Airborne Intercept (AI) Radar

15. **Why we need AI Radars?** Surveillance and target acquisition (STA) are fundamental to the prosecution of war in all dimensions. Capability of STA has a powerful impact on characteristic and conduct of operations. Surveillance may be defined as continuous systematic watch over the battlefield area to provide timely information for combat intelligence. Target acquisition is detection, recognition, identification and location of a target in sufficient detail to permit effective deployment of weapons. Various techniques are used for STA where system could be **ground based** or placed on **airborne platform**. The most widely used technique for detecting targets are those that exploit electromagnetic (EM) energy or radiation. Therefore, **Radars are used as an electronic system for the detection and location of objects and their movement.** Military aircraft fitted with airborne radars forms the most versatile platform performing the role of STA as interceptor, fighter and ground attack. Such radars are called **Airborne Intercept (AI) Radar**.

16. **Mission** Aircraft capable of STA perform two types of mission namely **Air to Air** and **Air to Ground.** The **Air to Air mission** can be classified into following:

17. **Air Superiority Mission**. The air superiority mission aims to destroy all types of enemy aircraft. It is mainly performed at medium and low altitudes. It is an offensive mission that involves the location and engagement of an enemy aircraft in order to destroy it while in flight. It takes place over friendly territory or enemy territory.

18. **Interception** Using target designation supplied by ground-based or airborne equipment (AEW), the interception mission requires aircraft, either on ground or in flight, to engage and destroy one or several planes that enter a friendly zone at any altitude. This mission requires a weapons system with highly effective components (platform: high climb rate, radar: long capability detection range, weapons: medium-range missiles with large differential height, etc.).

19. **Combat** Combat, which can be the final phase of the two previously described missions, takes place at short range (< 10 NM). It may begin face-to face (front attack), but one of its aims is to take up position behind the enemy (tail attack) to reduce relative speed and cross speed and to ensure its own safety. Weapons used are very high-speed

(° - °) Papa's photos (• - •)

short-range passive (IR) or active (EM) missiles, or possibly a gun, which requires the attacking aircraft to come into line with the enemy aircraft. Both the platform and the missiles for this type of mission must be highly adaptive. The radar must be able to detect and track the target in a wide angular domain, with high cross speed and rotation velocities.

20. **Escort** The escort mission that usually occurs at medium altitude involves the protection of a friendly ground-attack airborne formation.

21. **Functions of AI Radar**. The role of an airborne intercept radar in these missions is to: -

(a) Search, either autonomously or using target designation by a ground radar, in given angular and range domains.

(b) Detect targets in all weather (with a very low false-alarm probability), regardless of platform and target altitude.

(c) Track one or several targets simultaneously.

(d) Identify the parameters of the tracked target: radial velocity, acceleration, velocity vector, etc.

(e) Transmit these parameters to the weapon system so as to

(i) Establish the degree of threat posed by the targets.
(ii) Identify the target to be attacked.
(iii) Select the most suitable available weapon.
(iv) Continuously compute the firing envelope of the chosen weapon.
(v) Trigger firing once the target is inside the firing envelope.
(vi) Determine the disengagement order (pull off the attack).

22. **Salient Features of AI Radar** Airborne Radars for military applications operate in X band (8-12 GHz) for performing the roles of interceptor, fighter and attack (of ground targets). Radars at X band are generally of a convenient size and are therefore of interest for applications where mobility and light weight are important and very long range is not a major requirement. Relatively wide range of frequencies available at X band and the ability to obtain narrow beam width with relatively small antennae in this band are important consideration for high resolution application. Because of high frequency of X band rain can be a serious factor in reducing the performance of X band system.

23. **Purpose** The principle purposes of an airborne intercept (AI) radar are to detect and identify, low, medium, and high flying targets -including those below the horizon

(° - °) Papa's photos (• - •)

- to enable the timely use of appropriate tactics and weapons. It should be capable of tracking, measuring the flight parameters, and predicting the flight path of multiple targets simultaneously, so as to provide the crew with an overall air picture. The radar will also be required to provide the necessary cueing and guidance signals for air launched weapons such as radar guided missiles. At closer range, the radar should provide accurate steering and range information so that a visual identification of a target can be accomplished. In close combat the radar may be required to provide range and angle rate data for gun aiming, and range cueing for infra-red homing missiles. Radar angle data may also be used to slave IR missile heads onto a target to facilitate IR lock before missile launch. Such diverse requirements cannot be met with one type of radar transmission, and modern AI radars are able to operate in a number of modes, the most appropriate being selected for any particular situation. The capabilities of these various modes can only be realized with the aid of an airborne computer capable of processing the signals and of providing the necessary inputs to a synthetic display.

24. **AI Radar Modes**. To perform its intended function an AI radar operates in various modes The main modes are as follows:

(a) Air-to-air search

(b) Air-to-air tracking

(c) Air-to-air track-while-scan (TWS)

(d) Ground mapping.

25. **Air-to-Air Search** One of the functions of a fighter aircraft is to be able to search large volumes of air space to detect targets. Many scan patterns are able to accomplish this function, but perhaps the most common is the four-bar scan shown in **Fig 5.9** This scan comprises four bars stacked in elevation, and the radar mechanically scans from side to side in azimuth while following the four-bar pattern. The pattern shown begins in the top left-hand corner and finishes in the bottom left-hand corner before recommencing another cycle. The scan might typically cover $\pm 30^0$ in azimuth centred about the aircraft centre-line and about $10\text{-}12^0$ in elevation. The beamwidth in the air-to-air search mode will probably be 3^0, and the scan bars will usually to be positioned one beamwidth or 3 dB apart to ensure that no target falls between bars. The search pattern is organised such that a target may be illuminated several times during each pass, as indicated by the overlapping antenna coverage shown in the figure. This allows the target to be detected with certainty and avoids nuisance detections or false alarms. More importantly, integration techniques (summing the return from several successive pulses) allow the signal return to be enhanced and therefore the ability to detect the target in noise or clutter to be significantly improved. For similar reasons, integration techniques can enhance the range at which the target is initially detected. In earlier-generation radars, all the targets

(° - °) Papa's photos (• - •)

detected would be shown on the radar display and could lead to a confusing picture, particularly when trying to separate friend from foe. More modern radars with digital processors are able to

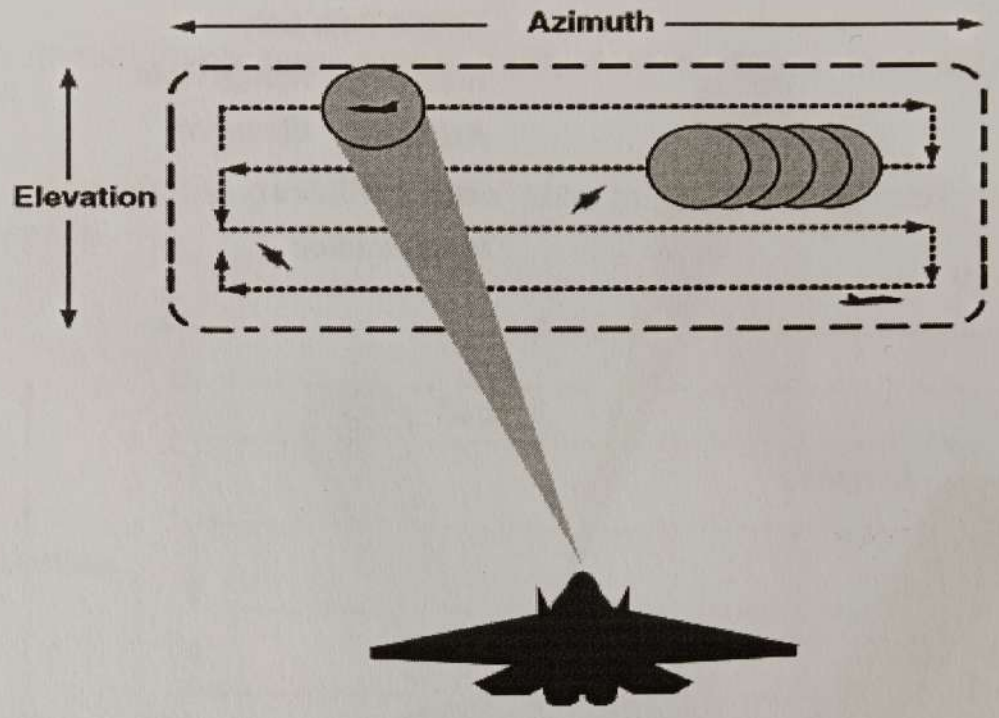

Fig 5.9 Typical Air to Air Search pattern

categorise multiple targets more easily, thereby simplifying the engagement procedure. It should be recognised that, when the radar is operating in this air-to-air search mode, enemy targets fitted with a radar warning receiver (RWR) or other detection equipment will know that they are being illuminated or 'painted' by the searching radar. Furthermore, by categorising radar signal parameters such as radiated frequency, pulse width and PRF, the enemy target will be able to identify what type of radar and what aircraft type is being encountered. The RWR will also give a bearing to the illuminating radar, and the 'blip/scan' ratio will indicate whereabouts in the radar scan pattern it is located. It will also be obvious that the radar energy only has to travel a single path to reach the potential target, whereas the energy has to travel out and back to the radar to produce a return. This means that the target aircraft will be receiving a much stronger signal than the radar. Therefore, while air-to-air search is a useful mode, radar operators should also be aware that at the same time they are also giving potentially useful information to their adversary.

26. **Air-to-Air Tracking** On occasions the radar may need to obtain more pertinent data regarding the target, perhaps in order to prepare to launch an air-to-air missile. To attain this more specific target information, the radar needs to 'lock on' to the target. When this occurs the scan pattern changes and the radar antenna tracks the target in azimuth and elevation. The target is also locked in terms of range using a range gate. The radar is

(° - °) Papa's photos (• - •)

now able to track the precise movements of the target. In some tracking modes the PRF may be switched to higher frequency to increase the target data update rate (**Fig 5.10**).

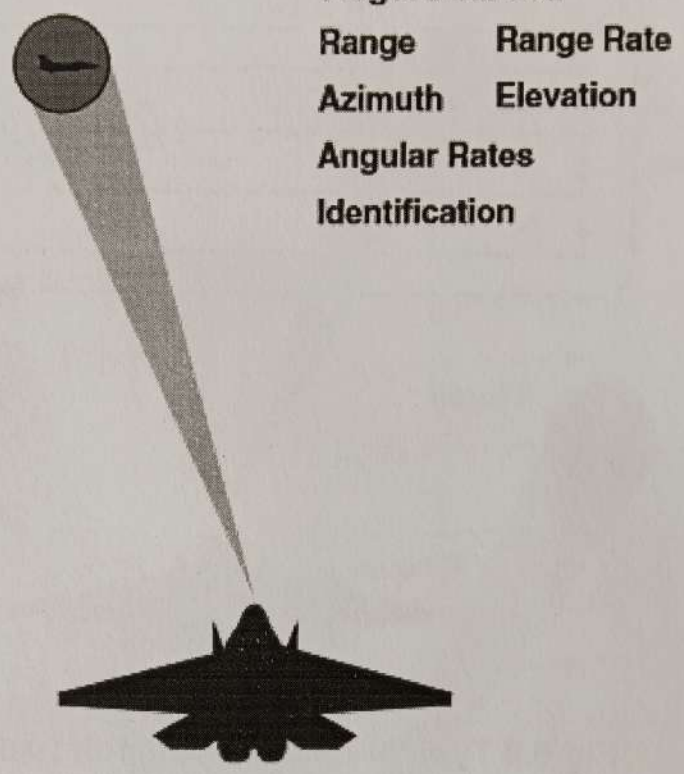

Fig 5.10 Air to air tracking

27. The accompanying changes in the radar characteristics detected by the potential target following lock-on is a warning that the engagement is becoming more serious. At this point the target may attempt evasive tactics – deploy countermeasures or chaff or jam the target radar. The means by which the radar achieves target angle tracking and target range is described later in the chapter.

28. **Air-to-Air Track-While-Scan** The disadvantage of locking on to the target and thereby signifying engagement intentions has already been described, but the advent of digital signal/data processing has enabled an elegant solution to be developed. Track-while-scan automates the process of deciding which target to engage **(Fig 5.11)** As TWS is under way, the radar processor progressively builds up a history of the flight path of targets within the scan. If successive measurements disagree, then the track is rejected; if the data agree, then the track is maintained. Gates are initiated that assign angular information, range and range rate to each track and predict where the target will be at the time of the next observation. If the track is stable, then the forecast gates will become more accurate and statistical filters will establish that the predicted fit is good. Techniques are used to arbitrate when gates overlap or where more than one target appears in the same gate perimeter. The advantages of TWS are as follows:

(° - °) Papa's photos (• - •)

29. Accurate digitised tracking data are established on each track within the antenna scan pattern without alerting potential targets that they are being tracked.

30. The automation process allows many targets to be tracked accurately and independently.

31. A typical radar using TWS will be able to track 20 or more targets in three dimensional space.

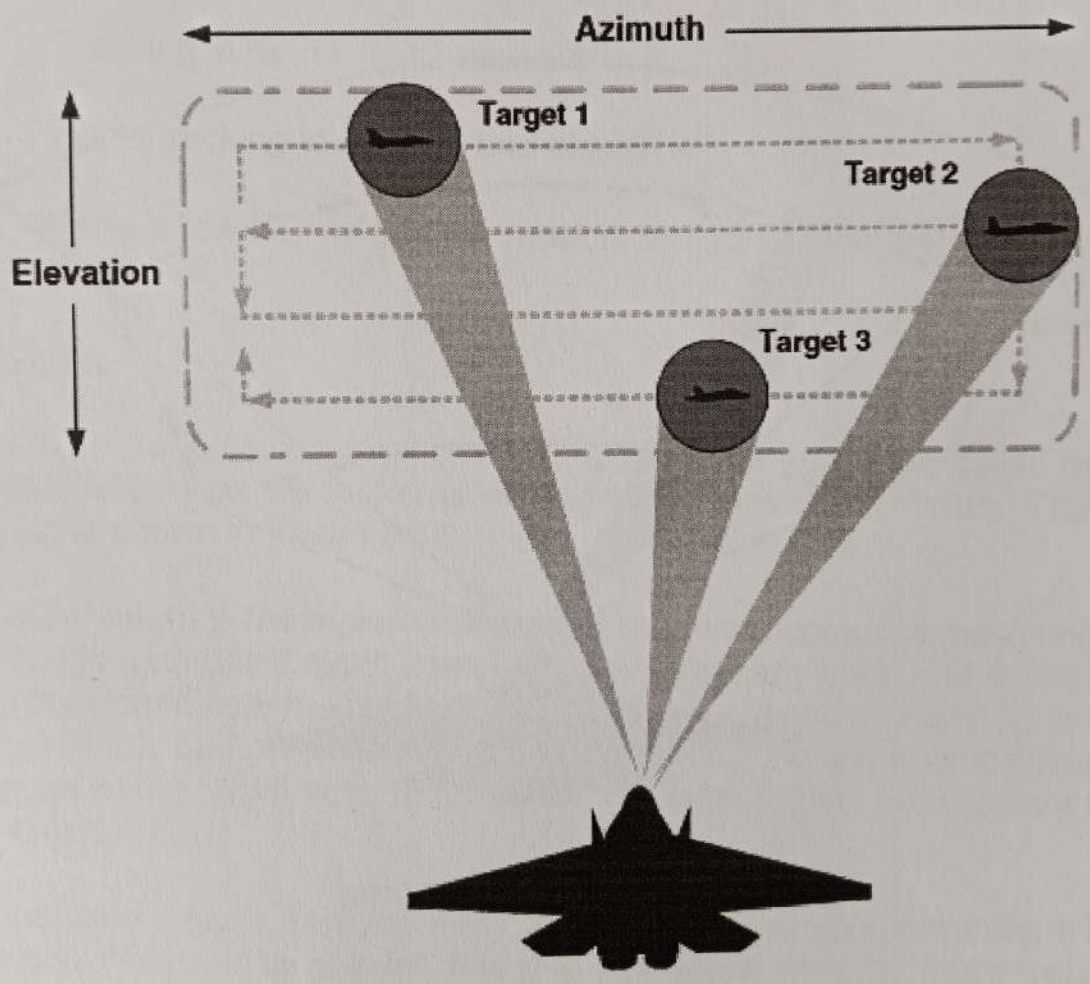

Fig 5.11 Air to air track while scan

32. **Ground Mapping.** From the early days of radar, it was known that the radar could be used to map the terrain ahead of the aircraft. Using the different reflective characteristics of land, water, buildings, etc., it was possible to paint a representative map of the terrain ahead of the aircraft where major features could be identified. With the application of digital processing and advanced signal processing techniques, the ability to resolve smaller features increased and high resolution mapping became possible. While using the ground-mapping mode, the antenna sweeps from side to side as shown in **Fig**

(° - °) Papa's photos (• - •)

5.12. The area illuminated by the mapping beam equates to the dotted boundary shown in the figure. Whereas the air-to-air modes use a narrow pencil beam, a fan beam is used for ground mapping. That is, a beam where one dimension is narrow (2- 3 deg) while the other is relatively broad, say 10 to 15 deg. The figure shows that the ground-mapping beam is narrow in azimuth and wide in elevation; this represents the optimum shape for the mapping function. This describes the operation of a basic ground-mapping mode. In the past 20 years, improved capability and flexibility have been achieved by the use of digital computing in the radar data processor (RDP) and pre signal processor (PSP). By the use of Fast Fourier transform (FFT) for signal processing and aircraft motion compensation, increasingly sophisticated radar modes have been developed.

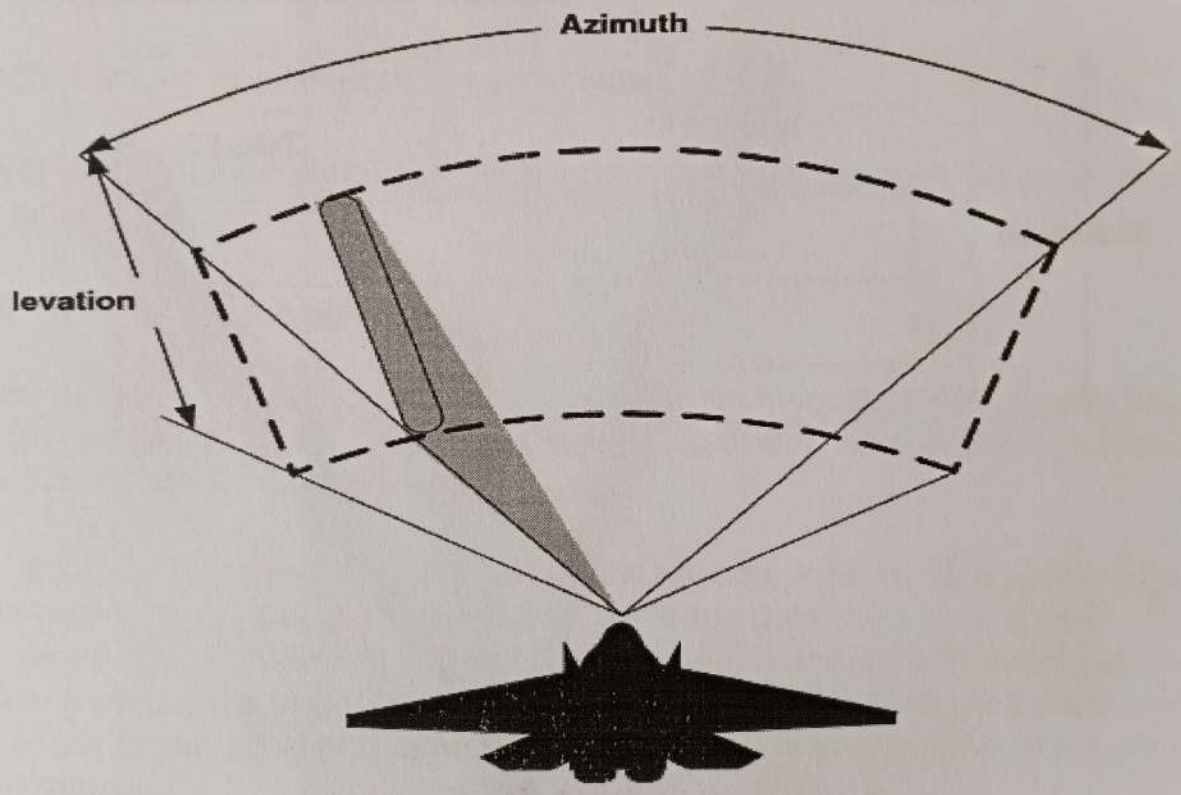

Fig 5.12 Ground mapping

Tracking

33. Tracking is the mode of operation of radar that provides the track or trajectory of a target. The purpose of tracking is to improve the estimates of target position and velocity relative to those that can be provided in the search mode. The purpose of directing a radar beam on to a target is usually to measure some parameter of that target such as ***range, velocity or angle***. Once measured a further requirement may be to monitor automatically the relevant parameters for that target on a continuous basis. This automatic monitoring function is known as tracking and radars that perform in this way are called tracking radars. There are two types of tracking radar:

( ) Papa's photos ( )

34. **Single target tracking (STT).** Such tracking radar observes only one target at a time which stares continuously at the target and gives unbroken target data.

35. **Multiple target tracking (MTT).** Radars with capability to keep an eye on a number of targets and feed parameters of any required target to an appropriate missile system. These systems are also called **Track while scan** radars.

36. During the pulsed radar tracking mode when the radar is locked on, it follows and automatically maintains key data with respect to the target:

(a) Tracking in range

(b) Angle tracking in azimuth and elevation.

(c) Tracking is maintained and the radar is said to have 'target lock' when all these loops are closed.

Range Tracking

37. Tracking in range is usually accomplished using a technique called range gating which automatically tracks the target as its range increases or decreases. The concept of the range gate is shown in Figure 5.13.

38. The radar return in the region of the target return will comprise noise and the target return. The range gating technique uses two gates, an 'early gate' and a 'late gate'. The early gate is positioned near the leading edge of the target echo and detects and captures energy from the early part of the target return. Conversely, the late gate is positioned near the trailing edge of the target echo and detects and captures the energy from the trailing edge of the target return.

39. The detected signals from the early and late gate are compared and the result is used to position the tracking gate so that it is coincident with the target return. In the example shown, both the early and late gates are positioned early (to the left) of the target return and the tracking gate is also incorrectly positioned. Consequently, the early gate detects less energy than the late gate. Identifying this discrepancy will cause the energy from early and late gates to be equalised and the tracking gate to be moved to the right (down range) so that it correctly coincides with the target echo. While the radar maintains target lock this process will be continued, maintaining the tracking gate at the same range as the target echo.

(° - °) Papa's photos (• - •)

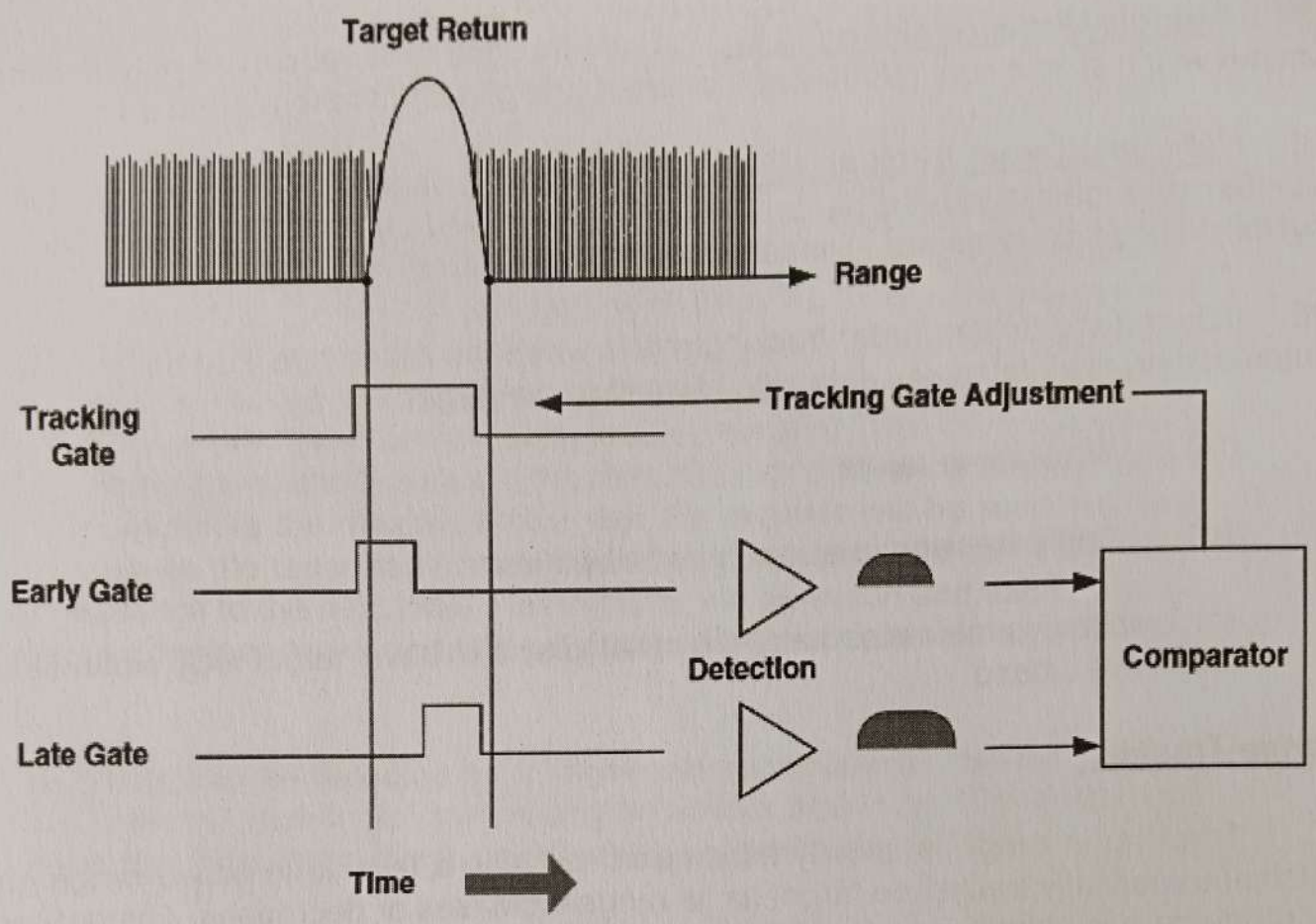

Fig 5.13 Range Gate Tracking

40. **Angle Tracking** During the radar tracking mode the radar tracks the angle to the target in azimuth and elevation. There are three main methods of angle tracking that are commonly used, these are:

(a) Sequential Lobing

(b) Conical Scan

(c) Monopulse

Sequential Lobing

41. One of the first tracking radar principles adopted was sequential lobing, which in its earliest form was used in a US Army angle tracking radar air defence radar. The principle of operation of sequential lobing is shown in Figures 5.14a and 5.14b.

42. To track a target in one axis, two lobes are required; each lobe squints off the radar boresight. The centre point of where the two lobes overlap represents the boresight of the

(° - °) Papa's photos (• - •)

antenna and this is the LOS that the radar antenna is trying to maintain. It can be seen that, when the signal return from the target is the same in both beams, the LOS to the target has been achieved. As the target moves, continual error signals will be sensed and the antenna servo system responds by nulling the error and maintaining LOS to the target. If four lobes, A and B and C and D, are positioned as shown in Figure 5.14a, then lobes A and B provide tracking in elevation and lobes C and D provide tracking in azimuth. The reflected signal from the target received in each of the four lobes is routed via a channel switching assembly sequentially switched into the receiver. In this way, each of the four lobe returns is measured and error signals are derived to drive the antenna elevation and azimuth drive servomotors. Figure 5.15 illustrates how each of the four lobes is switched in turn into the receiver. In practice, the waveguide switching arrangement is cumbersome and prone to losses; therefore, radar performance is compromised. The other significant disadvantage suffered by this method relates to the time taken for the sequencing to occur. The radar PRF will determine the maximum time that the receiver will be switched to a particular lobe. Only when the radar has completed the range sweep for a particular PRF can the receiver sequence to the next lobe. Furthermore, the elevation and azimuth error can only be updated once per cycle, and this adversely affects update rate and tracking error.

43. Sequential lobing can be detected by a target and transmissions can be devised that will cause the radar to break lock. Transmitting on all four beams and receiving only on one may counter this. This technique is called lobe on receive only (LORO).

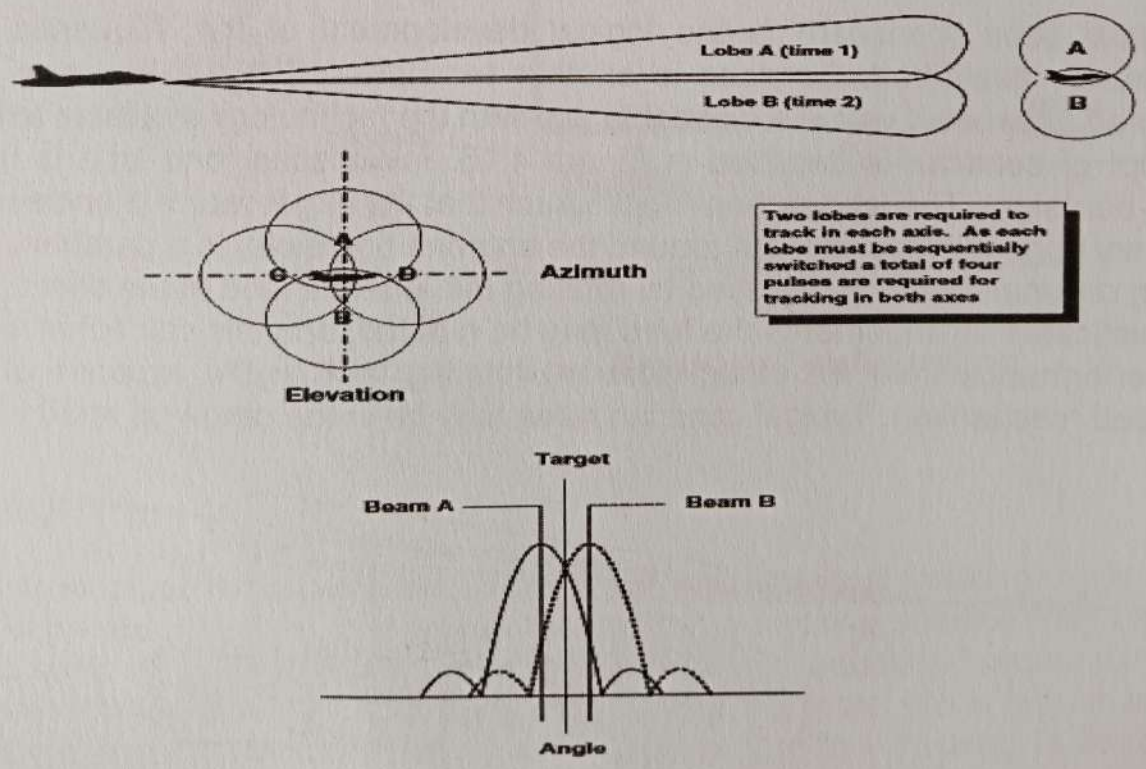

Fig 5.14 Sequential Lobing Technique

(° - °) Papa's photos (• - •)

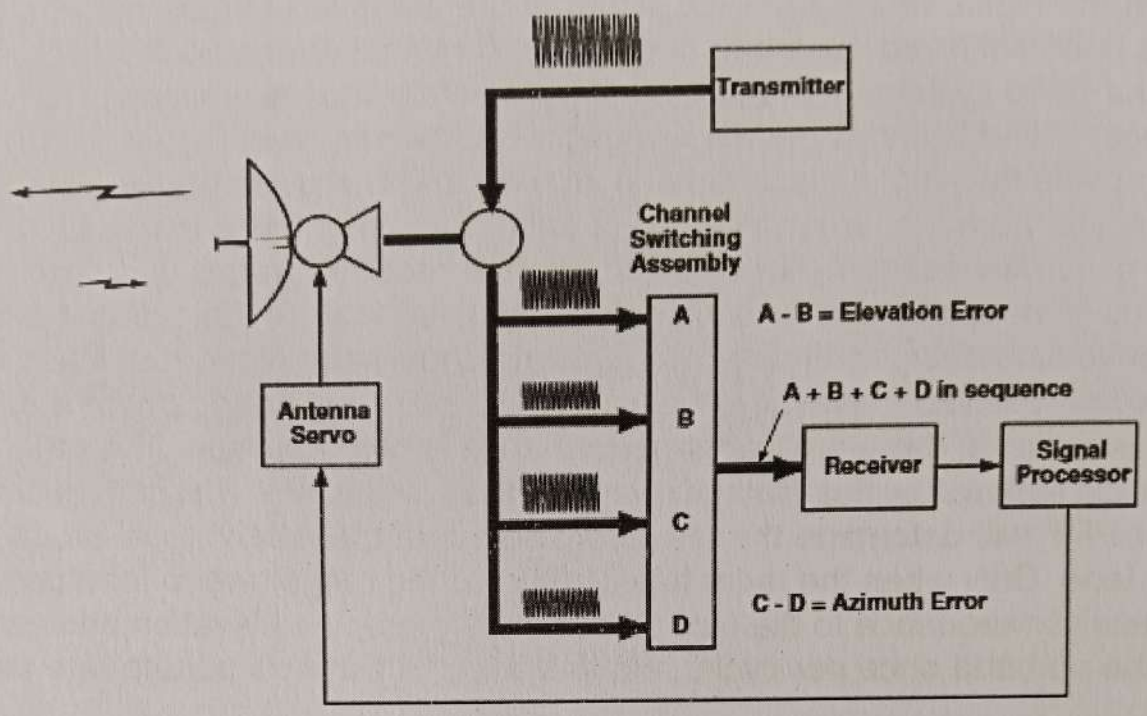

Fig 5.15 Sequential Lobing: Tracking Configuration

Conical Scan

44. Conical scan (conscan) is the logical development of the sequential lobbing scheme already described. Conscan is another example of the earliest form of angle tracking–used because it was the easiest to use with the technology available at the time. The concept of conscan is depicted in Figure 4.16. In conscan, one lobe is used that squints off-boresight. The lobe is then rotated such that the target return is enclosed within the imaginary cone that is swept out around the antenna boresight. In a parabolic antenna the rotating conscan beam is achieved by rotating the antenna feed at the desired rate. In more sophisticated arrangements the feed may be nutated, and this can achieve a better tracking performance than the straightforward rotating feed at the expense of a more complex feed mechanism. Typical conscan rates may be in the range up to 50 Hz.

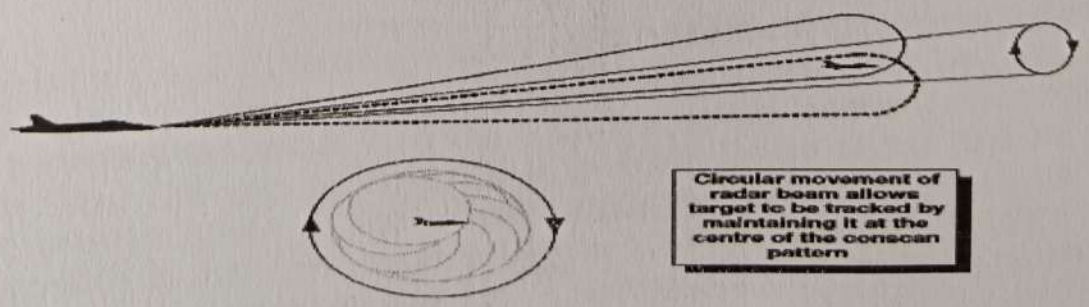

Fig 5.16 Conical Scan-principle of operation

(° - °) Papa's photos (° - °)

45. If the target is located off-boresight, the receiver will receive an amplitude-modulated signal at the conscan frequency. By detecting the signal and resolving the error components, drive signals are fed to the azimuth and elevation servo motors to move the antenna such thatthe target is back on boresight. The architecture of a conscan tracker is shown in Figure 5.17. As for the sequential lobing technique, there is only one receiver, but this is continuously fed with the conscan signal and the sequencing delays experienced with sequential lobing are avoided. Conscan does offer these performance advantages over the sequential lobe technique but does itself suffer from a major disadvantage. Potential foes can identify the conscan frequency and can radiate a signal modulated with the conscan frequency that can cause the radar to break lock. Conscan is therefore susceptible to electronic countermeasures. This deficiency may be overcome if the target is illuminated with a non-scanning beam and conscan is used only for the receive channel. In this way, adversaries do not know they are being tracked by conscan means since the tracking operation is opaque to them. This technique is known as conical scan on receive only (COSRO).

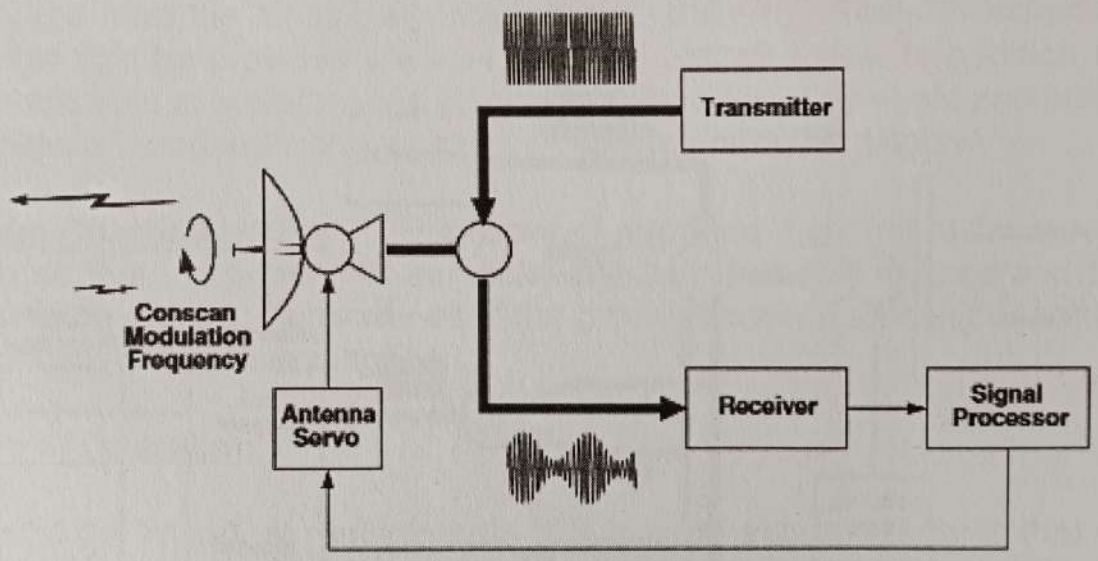

Fig 5.17 Conical Scan-Tracking Configuration

Monopulse

46. Monopulse is the preferred tracking method, and most tracking modern radars use it out of choice. The term monopulse means that a tracking solution may be determined on the basis of a single pulse rather than the beam sequence (sequential lobing) or a complete conical scan. The tracking data rate is therefore much higher and therefore potentially more accurate. Another advantage is that the tracking is based upon the simultaneous reception of the target return in all four channels and any variation in the echo in time can be readily accommodated. This is not the case with the other techniques.

(° - °) Papa's photos (• - •)

47. Monopulse uses four simultaneous beams as shown in Figure 5.18, in which the beams are stacked in elevation and side by side. All four beams squint away from the antenna boresight by a small amount. Comparison of the target returns in all four channels is undertaken and error signals are derived to drive the antenna azimuth and elevation drive servo motors as appropriate. Monopulse techniques may use either phase or amplitude comparison to perform the tracking task. Of the two, amplitude comparison is generally preferred.

48. All four channels transmit the same signal. The target return is received in each part of the monopulse array and fed into waveform junctions called hybrids which perform the sum and differencing function. A simplified portrayal of this arrangement is shown in Fig 5.18. Downstream of the summing and differencing process, three RF channels are formed: the sum channel (A+B+C+D); the elevation difference channel (A+B)-(C+D); the azimuth difference channel (A+C)-(B+D). Each channel is fed into the receiver which has three corresponding channels. The sum channel is used to measure range, and the elevation and azimuth difference channels are used to drive the antenna elevation and azimuth servo drives respectively.

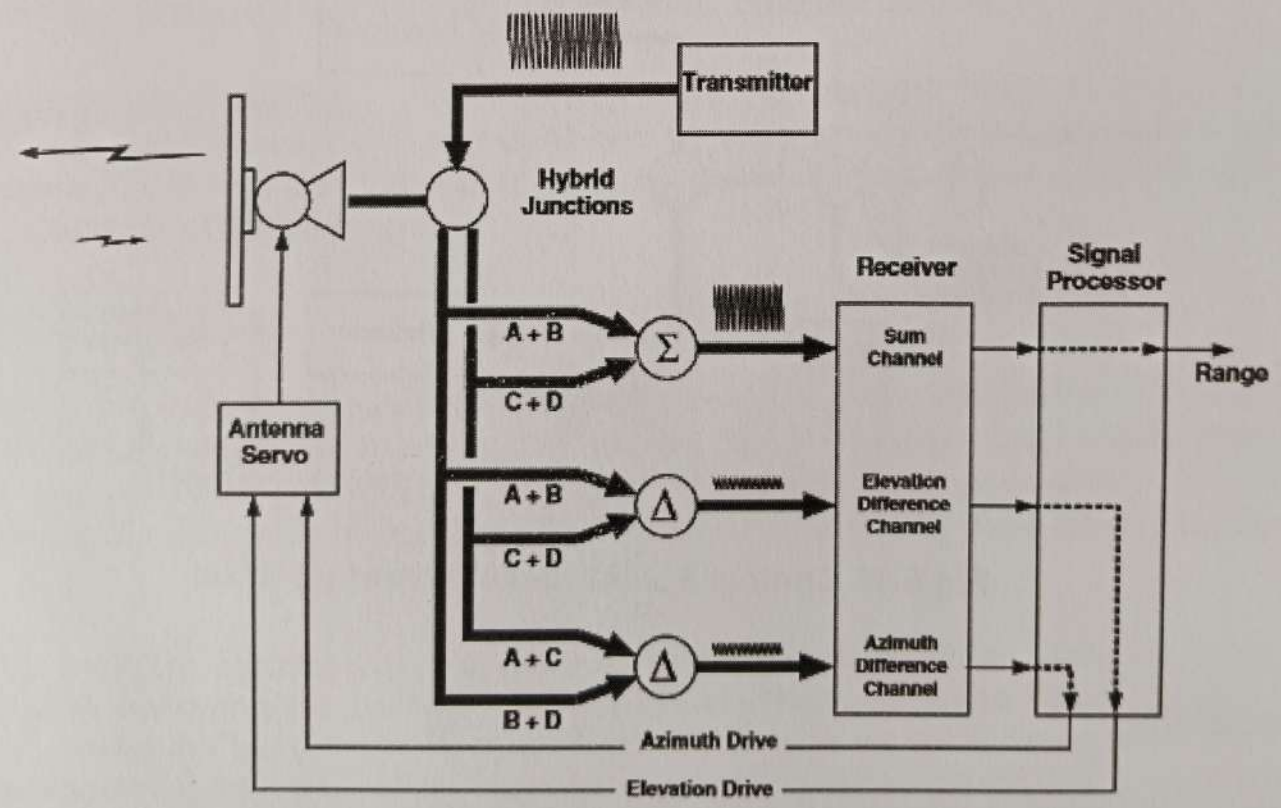

Fig 5.18 Monopulse -Tracking Configuration

(° - °) Papa's photos (• - •)

Air to Ground Mode

49. This mode is used for ground mapping to present the operator with an image of terrain features, which can then be used to aid navigation, locate targets, and determine weapon aiming parameters. A radar map of an area of the surface is achieved by scanning the radar beam either by mechanically moving the aerial or by using a phased array antenna. The radar image is presented on a CRT, the time base of which sweeps in synchronization with the radar beam, and is intensity modulated in response to the signal strength of received echoes. The image brightness is thus related to the nature of the reflecting object and, in general, **built-up areas** appear bright, **water** appears dark, and **land** appears in an intermediate tone. The persistence of the CRT phosphor ensures that a continuous image of the ground is maintained between sweeps. Two primary requirements to be met for ground mapping is discussed below.

50. **Antenna Stabilisation** The radar aerial must be stabilized, within limits, to the true horizontal both in roll and pitch to avoid image distortion, and this is normally achieved by using inputs from the aircraft attitude system - the degree of roll and pitch for which compensation can be provided will vary between aircraft types. In addition to the radar image, it is possible to superimpose electronically produced symbols and cursors, and in some systems a topographical map can be projected onto the display.

51. **Beam Characteristics** The beam of a ground mapping radar must be narrow in **azimuth** so that the bearing of any echo can be accurately defined and broad in the **vertical plane** in order to illuminate all of the ground between a point beneath the aircraft and the horizon (or effective range).

SAR Mode of Operation

52. One of the important requirements of a modern airborne radar is that of providing high-quality radar mapping such that topographical features and potential targets may be identified and classified. The quality of the radar map depends upon its ability to resolve very closely spaced objects on the ground–in the most demanding case down to within a few feet.

53. The problem surrounding the need to resolve to such high resolution may be understood by reviewing the ground footprint of a radar beam radiated directly abeam the aircraft as shown in Figure 5.19. The oval footprint may be resolved into smaller cells or pixels. Along the radar boresight (perpendicular to the aircraft track) the range swath may be resolved into finer range resolution cells. Across the radar beam (along the aircraft track) the increments are azimuth increments as far as the radar is concerned.

54. It will be recalled that, for a pulse of width τ, the range resolution increases as the pulse width becomes smaller. For a 1ms pulse, the range may be resolved to 150 m; for

(° - °) Papa's photos (• - •)

a 0.1ms pulse this would be reduced to 15 m; for a 0.01ms pulse the resolution would reduce to 1.5 m and so on. The major limitation to this approach to increasing range resolution relates to the frequency spectrum associated with a very short pulse. The receiver bandwidth required to pass all the frequency components is determined by the 3 dB bandwidth which in turn is related to the pulse width, where $B=1/\tau$. For the 0.01ms pulse the bandwidth is 100 MHz. The impact of bandwidth depends upon the value of the carrier frequency; for an AI radar operating at 10 GHz, a 100 MHz bandwidth is not excessive, but, as frequency decreases, it may become more of a problem.

55. The answer to this problem is to use a technique called synthetic aperture radar (SAR). In this solution the aircraft forward movement is used to create a large synthetic or artificial aperture, as can be seen in Figure 5.19. The aircraft shown on the left of the diagram is transmitting a series of pulses at constant intervals, which equates in turn to constant along-track increments. A series of patches of ground will be illuminated abeam the aircraft and the return from pulses 1;2;3;4;...;n may each be detected and collected in a series of range bins. The principle of this technique, easily implemented in a digital computer, is shown in Figure 5.20. After a series of pulse returns has been stored, the oldest are eventually discarded; the number of pulse returns retained before discarding is a function of the algorithm being used. This memory bank of the returns of the previous n pulses may be rapidly scanned to present a strip-line picture of the area of the terrain being mapped.

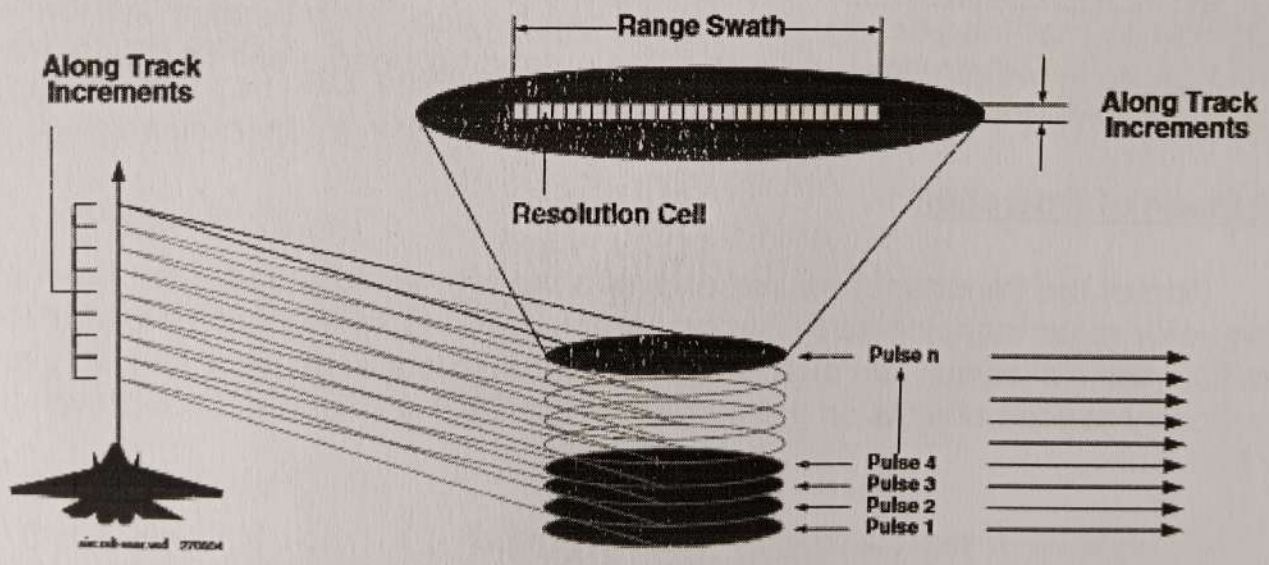

Fig 5.19 Principle of Synthetic Aperture Radar

(° - °) Papa's photos (• - •)

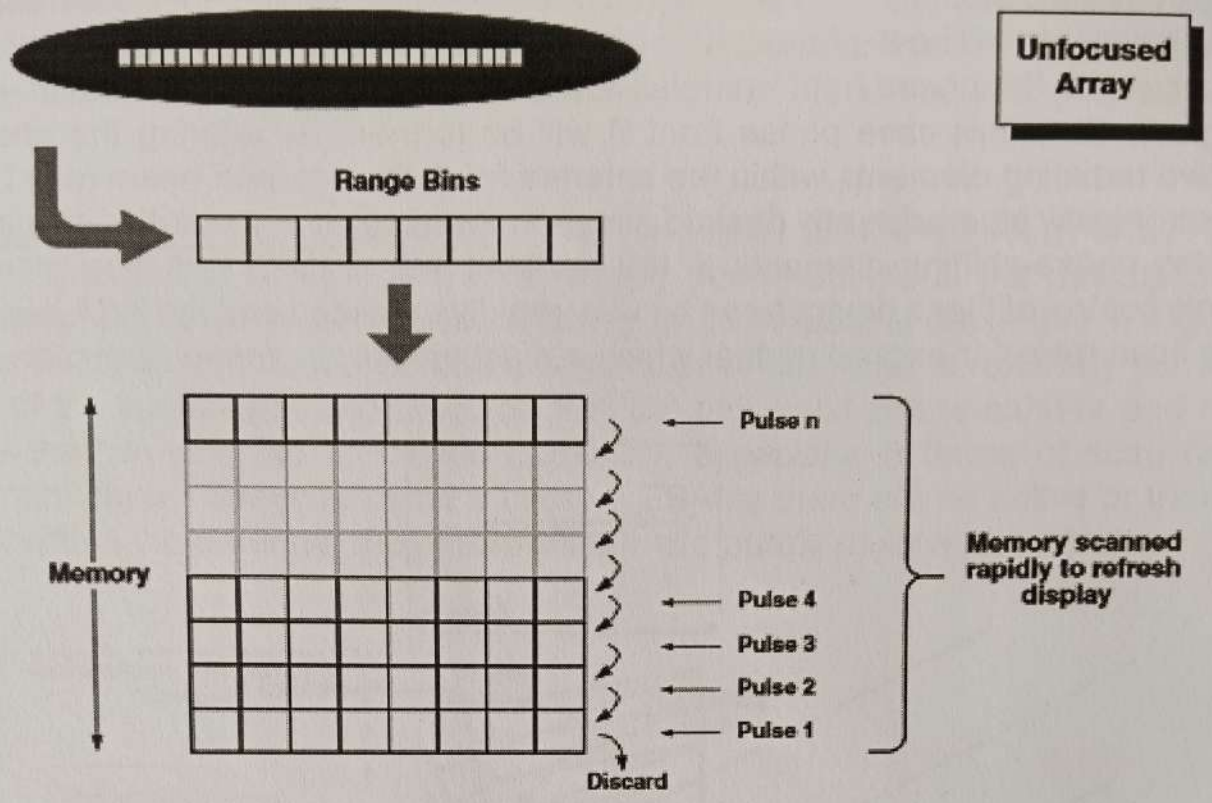

Fig 5.20 Collection and storage of successive pulse returns

Advanced Antennas

56. In this section it is intended to move beyond a simple comparison of the parabolic reflector and planar array antenna to examine how technology assists in the development of new antennas that can offer significant benefits beyond merely increasing the antenna beamwidth and minimising the sidelobes. The following antenna types will be described:

(a) Planar Array

(b) Electronically Steered Array

(c) Active Electronically Steered Array

Principle of the Phased Array

57. The principle of the electronically steered phased array is shown in Figure 5.21. A phased array comprises a number of radiating elements–effectively miniature antennas–each of which is able to radiate independently. The relative phase of each element decides the direction in which the array radiates. Figure 5.21 represents a radiating array in which the elements are all radiating at the same frequency but each equally displaced in phase from the others. In detail A, each element of radiated energy will be in phase with the other

(° - °) Papa's photos (• - •)

elements once a distance A has been travelled. Therefore, at angle A off-boresight all the radiating elements will be in phase and a phase front or radiated waveform will be directed perpendicular to the phase front. In detail B the distance has changed to distance B and the angle to B. In this case phase front B will be formed. By altering the phase of the respective radiating elements within the antenna feed, the antenna beam may be shaped and electronically steered in any desired direction in elevation or azimuth. This is achieved by placing phase-shifting elements in the transmit line of each radiating element, and electronic control of these devices can be very rapidly executed and the ESA can therefore achieve scan rates far exceeding that which a mechanically scanned array can achieve.

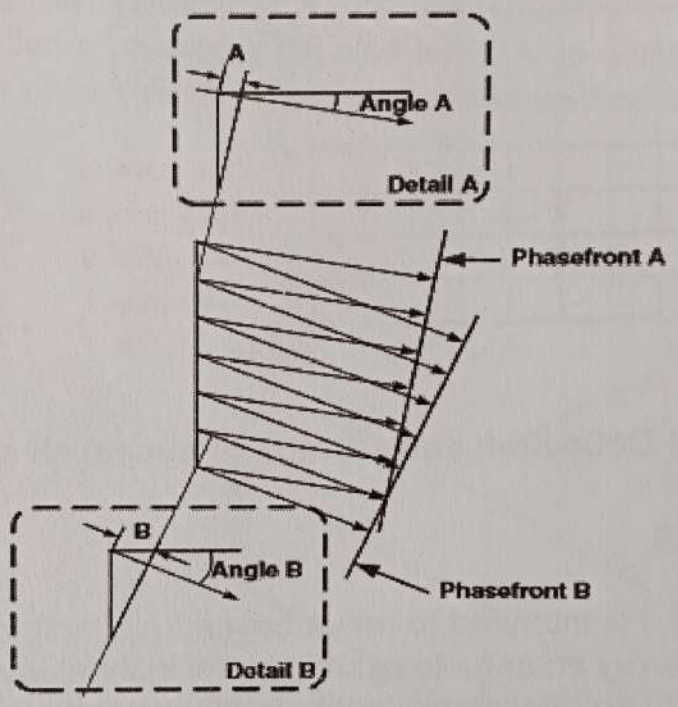

Fig 5.21 Principle of Phased Array

58. **Planar Array**. The planar array represents the simplest implementation whereby physical phasing of the individual RF distribution system shapes the antenna radiating pattern, analogous to the parabolic antenna previously described. The radiating surface of the planar array comprises several hundred radiating slots that are clearly visible on the front face of the antenna. These slots radiate the transmitted radar energy and receive the energy returning as the target echo. These slots behave as dipoles and at the relatively high frequencies commonly used are easier to fabricate than a dipole. Whereas the parabolic reflector used the physical distance between the antenna focal point and the parabolic reflector to shape the beam, the planar array uses a more subtle technique. A planar array is mechanically formed (via phasing) and mechanically steered by means of conventional antenna scanning servo techniques. The planar array does not use electronic switching means to scan the beam as is the case in the ESA. Rather, the beam is formed and shaped using phasing techniques embedded within the design of the antenna. To scan targets in the outside world, the planar array must be mechanically

(° - °) Papa's photos (• - •)

scanned and therefore cannot meet the high slew rate scanning capabilities of the ESA. Nevertheless, the planar array is likely to be less expensive than the ESA, not requiring the expensive phase-shifting elements, and is still used for many airborne radar applications.

59. **Electronically Scanned Array**. The principle of the phased array and the electronically scanned array (ESA) has already been outlined in the description of the phased array, and a top-level diagram showing an ESA radar is presented in Figure 5.22. The key point about the ESA is that the remainder of the radar is relatively conventional in terms of the transmitter and receiver. It is the individual phase shifters and radiating elements that provide the enhanced capability, especially in terms of scan rate. The arrangement shown above is called a passive ESA as there are no active or transmitting elements within the antenna; the phase shifters are purely passive devices.

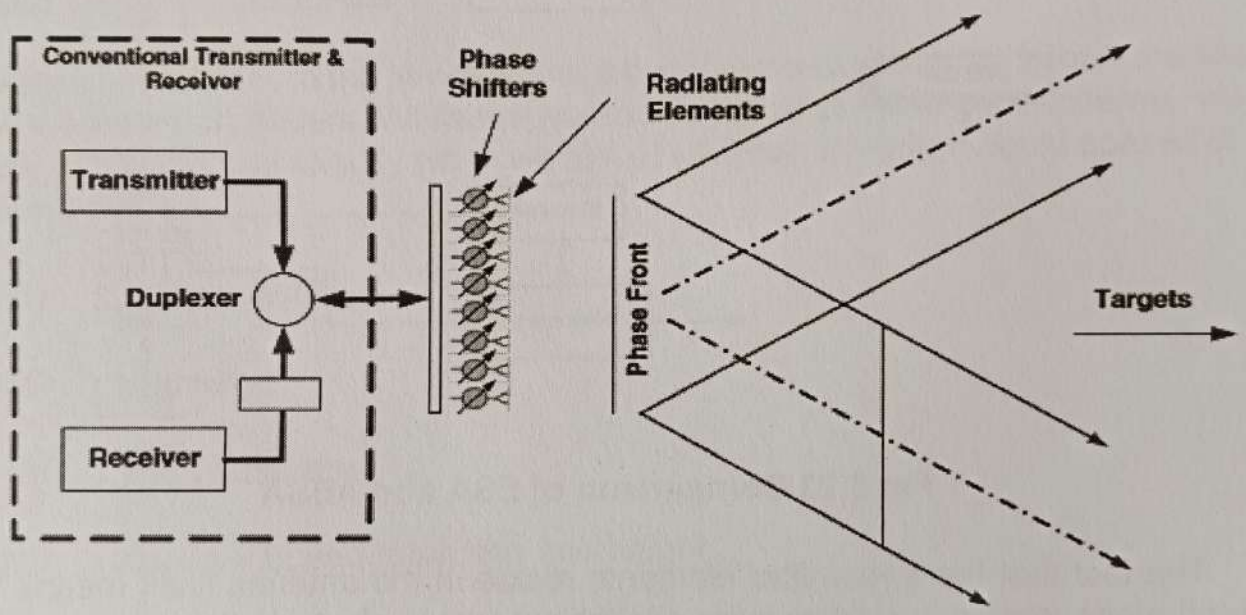

Fig 5.22 Electronically Scanned Array

60. The ESA removes many of the components that contribute to failures in a conventional mechanically scanned antenna. Rotating waveguide joints, gimbals, drive motors, etc., are all removed. Consequently, the reliability of the ESA is improved. Failures of the phase shifters may be easily accommodated as the antenna can stand up to perhaps 5% of these failing before the radar performance is adversely affected.

61. **Active Electronically Scanned Array**. The passive and active ESA top-level architectures are compared in Figure 5.23. As has already been seen, the passive ESA is fairly conventional, with the exception of the antenna which includes the many passive phase-shift elements. The active ESA, referred to as an active electronically steered array (AESA), is quite different. The AESA includes multiple individual active transmit/receive (T/R) elements within the antenna. Depending upon the precise implementation, there

(° - °) Papa's photos (• - •)

may be anywhere between 1000 and 2000 of these individual T/R elements which, together with the RF feed, comprise the AESA antenna. As for the passive ESA, these elements are highly redundant and the radar can continue to operate with a sizeable percentage of the devices inoperative. This graceful redundancy feature means that the radar antenna is extremely reliable; it has been claimed that an AESA antenna will outlast the host aircraft.

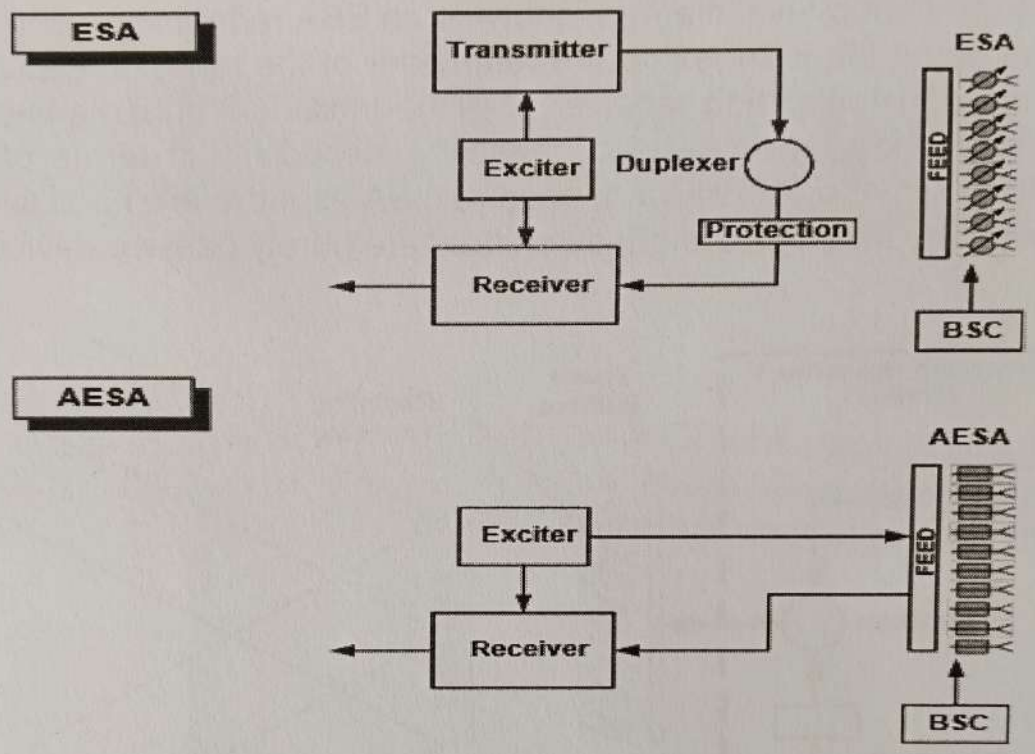

Fig 5.23 Comparison of ESA and AESA

62. The fact that the transmitter elements reside in the antenna itself means there is no stand-alone transmitter–there is an exciter but that is all. As before, there is clearly a need for a receiver as well as an RDP and signal processor. The active T/R elements are controlled in the same way as the phase shifters on the passive ESA, either by using a beam-steering computer (BSC) or by embedding the beam-steering function in RDP.

63. **Radar Data Processor**. The radar data processor is the heart of radar. The RDP serves the following functions:

(a) It receives commands from the radar control panel and avionics systems to exercise control over the radar modes and sub modes, as determined by the combat situation.

(b) It accepts aircraft attitude and stabilisation data in pitch roll and yaw axes to maintain the correct antenna position; it also receives velocity and acceleration data from the aircraft Inertial Navigation System (INS).

(° - °) Papa's photos (° - °)

64. The RDP provides antenna drive commands to align the antenna axis with the horizontal axis, vertical axis and lateral axis (usually heading) as an orthogonal axis set. The RDP receives antenna positional data to close the antenna stabilisation loops such that the radar antenna boresight is stabilised and aligned to aircraft/geodetic axes to facilitate weapon-aiming functions accounting for the attitude, velocity and acceleration of the aircraft.

65. The RDP provides control outputs to the transmitter and exciter to determine the nature of the radar transmissions: carrier frequency, modulation, PRF, etc. It also provides data to the receiver and signal processor to enable the target reflections to be processed, filtered, detected and displayed.

WEATHER RADAR- CLOUDS

66. As an aircraft flies in the atmosphere, it becomes critical that the pilot is made aware of all the weather parameters. While the weather is talked about in generic terms, we need to specify what is meant exactly when we talk of weather. Weather would consist of many parameters like: -

(a) Temperature

(b) Humidity

(c) Thunderstorms

(d) Winds – Speed, direction and height

(e) Pressure

(f) Visibility

(g) Clouds - Precipitation

67. To measure these parameters, one would obviously not use radar as temperature could be measured with the help of a simple temperature probe, humidity could be measured with a hygrometer and pressure could be measured by any kind of barometric device etc. Of all these parameters, only clouds or their precipitation levels could be measured by specific radar termed as weather radar.

68. If an aircraft happens to enter a cloud, it is pertinent to know what all could happen. In fact, following could happen: -

(° - °) Papa's photos (• - •)

Physical damage could occur in case an aircraft enters the clouds. It could happen if hailstones strike the aircraft. The relative speed of the aircraft hitting a static hailstone could imply massive damage.

69. Moisture present in the clouds could seep into the electronic circuits and could cause short-circuiting.

70. Malfunctioning of electronic components resulting in equipment's either stop working totally or could give erroneous readings.

71. Presence of static in clouds lead to noise in electronic circuits.

72. Lack of visual cues inside a big cloud could disorient the pilots.

73. Formation of ice on the aircraft surface could lead to increased weight as well as flawed aerodynamic performance.

Weather Radars – Transports or Fighters?

74. Aircrafts can be classified as fighters and transports. Both these aircrafts have a different way of operation – fighter ac generally take off and land back at the same base. Even when they are to do a ferry or a transit flight, adequate care is taken to ensure that radar/ATC coverage is available to the fighters at all times in the course of their flight. This means that the ATC/Radar can pass the latest weather updates to the aircrafts at almost all times and thus the need for a weather radar to be installed on a fighter aircraft can be dispensed with. Moreover, there are always limitations in terms of the weight and the space on a fighter aircraft and thus weather radar is generally not installed on it.

75. However, in the case of the transport aircraft, the sorties are generally long distance and unplanned. There are frequent instances of the routes of a transport aircraft being changed in the course of the flight. Therefore, during the course of the flight, a transport aircraft will fly over areas which do not have any ATC/Radar coverage. Thus, transport aircraft need to be self-sufficient as far as predicting weather is concerned. Moreover, there is no constraint of either weight or space here. Therefore, weather radars are generally fitted on transport aircrafts.

76. Helicopters fall someway in between fighters and transport aircraft in terms of their capabilities and limitations and normally small helicopters do not have any weather radars fitted on it. However, trials are on to fit weather radars on large helicopters these days. Some of the helicopters employed an specific duties like VVIP duties in communication Squadrons, operating in remote island areas (Located far away from mainland) have been fitted with weather radars for specific role-related tasks.

(° - °) Papa's photos (• - •)

Fig. 5.24 Weather Radar - Scanning in azimuth

Weather Radar Characteristics

77. It is an airborne pulse radar designed to locate turbulent clouds ahead of the radar. In the interests of the safety and comfort, clouds must be circumnavigated. Radar beam is conical. Typically scans azimuth 70 degrees to 90 degrees either side of the aircraft's heading. Weather radar scanning in azimuth is shown in **Fig 5.24**. Some weather radar scans vertically (+/- 25 degrees) to give a profile display. Most weather radars have a secondary ground mapping application. Weather radar is an airborne pulse radar designed to locate turbulent clouds ahead of the aircraft so that, in the interests of safety and comfort, they may be circumnavigated either laterally or vertically, or penetrated where the turbulence is likely to be least. The radar beam is conical, and typically scans in azimuth 75° to 90° either side of the aircraft's heading. Some systems can scan vertically (typically ± 25°) to give a profile display. Cloud returns are displayed as bright areas on a sector PPI display equipped with either fixed or electronically generated range and bearing markers. The scanner has limited stabilization in pitch and roll so that the scan remains horizontal and with a steady tilt angle relative to the horizon during aircraft manoeuvre.

Principles of operation

78. Cumuliform clouds associated with rising & descending currents of air leading to turbulence. These currents can be severe in case of cumulo-nimbus clouds. Turbulence tends to retain water droplets within cloud which increases in size until they fall as heavy precipitation. This precipitation of large water drops reflect radar energy & turbulence can be inferred. Hailstones are covered with film of water & tend to produce strongest echoes. Gentle rain, snow & dry ice produces weakest echoes. Non-turbulent, principally stratiform clouds are not usually detected by radar as water droplets size is too small. Normally radar energy penetrates precipitation, however extremely heavy precipitation may attenuate the radar to an extent.

(° - °) Papa's photos (• - •)

Design Considerations

79. Typically, the choice of frequency is dictated by a combination of the hydrometers of interest (cloud, light or heavy rain, snow) and a compromise among the desired resolution, swath, aircraft altitude, and antenna size. Cloud sensing or simple rain detection capabilities favor the use of higher frequencies (near 35GHz) and the atmospheric window between about 75GHz to 100GHz. Making measurement over the full rain column (especially at the higher rain rates) requires a decrease in the frequency. Lowering the frequency present certain problems, however, in that the ratio of the surface clutter to the rain signal increases the sensitivity of to light rain rates decreases, and larger antennas are needed to achieve the desired resolution. However, the degraded sensitivity is offset somewhat by the lower noise figures and more efficient transmitters that are available at the lower frequencies. Upgrading the radar from a single to a dual wavelength system has several advantages. The high frequency is best employed in detecting light rain rates and clouds, while the lower frequency (because of the smaller attenuation) is better able to sense moderate and heavy rains near the surface. The presence of returns from two wavelengths also permits the application of a number of estimation techniques that may lead to more accurate rain rate estimation. The dual-wavelength radar also enhances the capability for distinguishing the phase states of the hydrometeors (i.e., separating regions of rain from hail, the melting layer and snow).

(° - °) Papa's photos (• - •)