30 LB Combat Robot “Boulderbot”

Terrence Andre San Gabriel
NDSU Mechanical Engineering ‘27
terrsangabriel@gmail.com

This is an ongoing project

Context

- NDSU’s “Boulderbot” Combat Robotics team is designing a 30 lb combat robot which will compete in UIUC’s Robobrawl XI.

Role

- Group lead - organized design reviews, manage bill of materials, and provided mentorship to new members
- Structural lead - oversee design of structural components (chassis, electrical mounts, weapon profile, etc.)

Development

- Took many learnings from last year’s robot (Cowbot)
- Increased internal volume to account for wires and other peripherals, as well as ease of access for maintenance
- Simplified top access panel
- Use 3D printed TPU instead of UHMW to allow for more complex geometries
- Prototyped chassis with wood
- Used FEA for more analytical weight reduction as well as impact analysis on weapon system
- Higher autonomy across group members as a result of last year’s mentorship

Takeaways
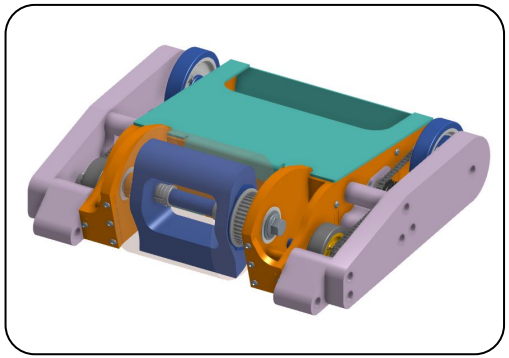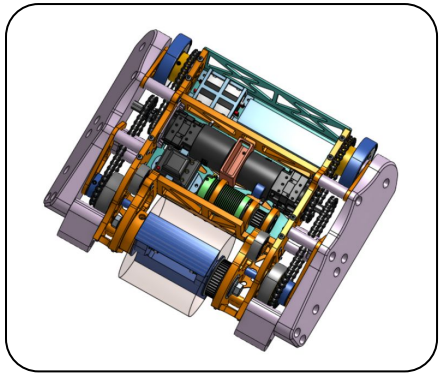
- A better ESC solution should be investigated for next robot, current ESC selection cannot take more than a 5S battery, degrading power output on the weapon
- More thorough and extensive load cases for FEA should be applied