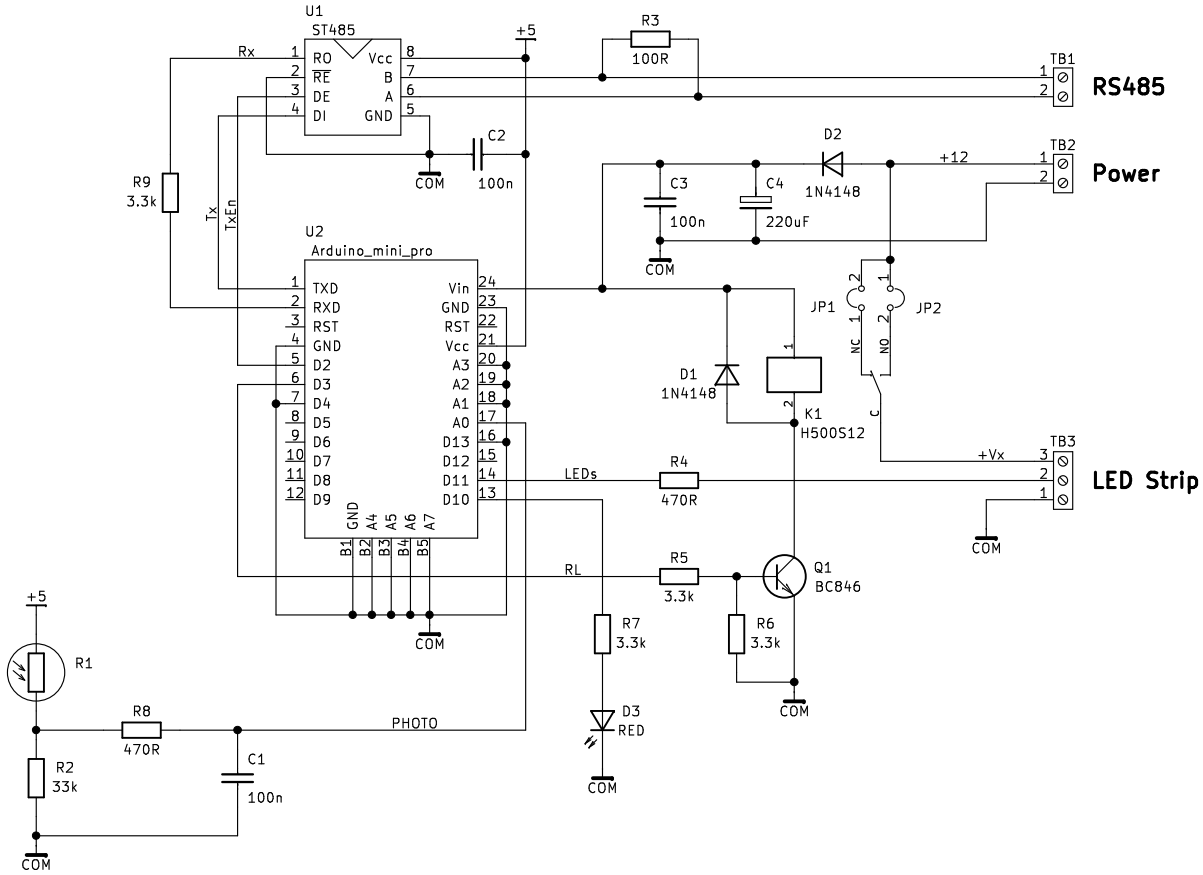

=AK=

Sheet: /

File: LED_strip_drv.sch

Title: LED Strip Driver

Size: A4	Date: 2018-05-18	Rev: 1.1
KiCad E.D.A. kicad 4.0.4-stable		Id: 1/1